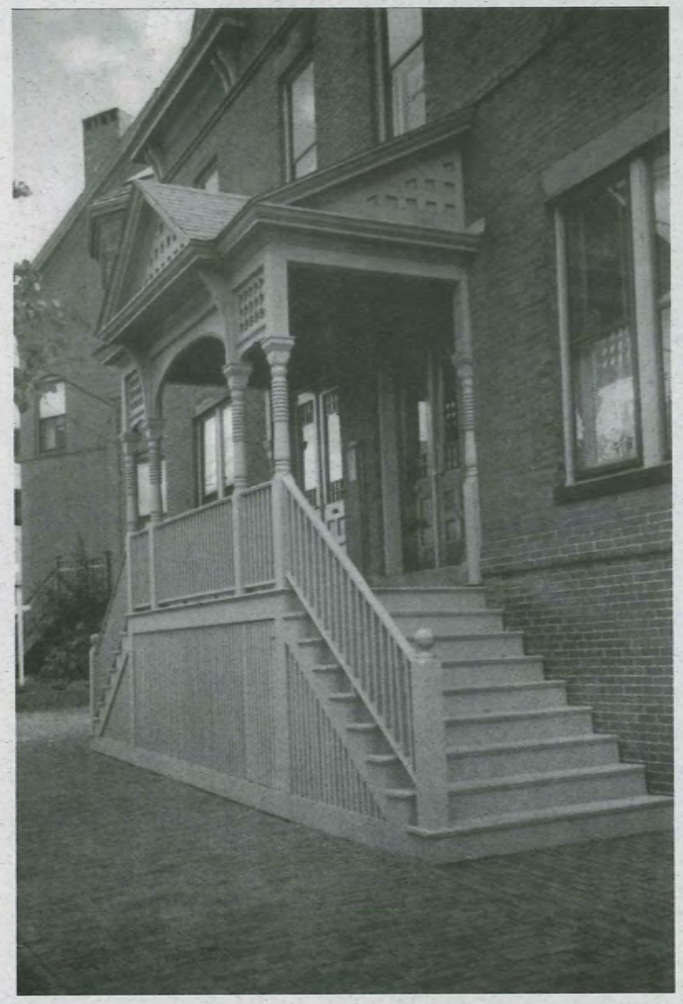

Guidelines for Porch Repairs and Replacement

A Handbook for Property Owners in Portland

Historic Preservation Office
Department of Planning and Urban Development
City of Portland, Maine

Turk Tracey & Larry Architects, LLC
Portland, Maine

Acknowledgments

This brochure was prepared by Turk Tracey & Larry Architects, LLC, Portland, ME and the Portland Planning Department's Historic Preservation Office.

Historic Preservation Committee:
Edward Hobler, Chairman
Rick Romano, Vice Chair
Susan Wroth
Camillo Breggia
Robert Parker
Stephen Sewall
Cordelia Pitman

Staff:
Deborah Andrews, Historic Preservation Program Manager
Jeffrey Harris, Preservation Compliance Coordinator
William Needelman, Planner

May 2001

INTRODUCTION

Much more than simply a means of entry or protection from the elements, the porch is the focus of attention as visitors approach a house and creates the first impression of the building. The individual porch components on most historic structures, such as the columns, pediment, and railings, have all been deliberately selected to enhance and reinforce the architectural style of the residence itself. Removing these important features or replacing a porch without consideration of the historic details detracts both from the character of the house and the neighborhood.

Porches need preventive and corrective maintenance on a regular basis. Due to their heavy use, exposure to the elements, and close proximity to the ground, porches can easily deteriorate, and tend to be the most frequently replaced element of a house. A well-designed porch that is consistent with the style of the house creates a dramatic improvement to a building and, with good maintenance, will be a wise investment for the property owner.

This brochure is intended to be a guide for homeowners and caretakers of Portland's historic residential properties as they begin the repair or replacement of a porch. The brochure will help property owners understand the importance of integrating porch design with the architectural style of the building. Following a brief history of porches, the brochure provides photographs and dimensioned drawings of typical porch styles found in Portland's traditional neighborhoods. The brochure also includes maintenance recommendations to help preserve an existing porch. While these guidelines cannot provide specific solutions for every design problem or circumstance, they will identify the issues that need to be addressed in any successful repair or replacement project.

COMMON PROBLEMS IN PORCH REPAIR AND REPLACEMENT

Inappropriate replacement materials and features on a porch detract from the character of a house and its neighborhood. For example, materials not designed to withstand heavy use or exposure to the elements can quickly cause a porch to become an unsafe and unsightly feature. Similarly, ill-proportioned replacement railings and posts can significantly alter the original appearance of the building. The careful consideration of materials, finishes, proportions and design elements, consistent with the style of the house, will add value to your property.

Although the height of this porch railing conforms to current building codes, it is not proportionate to the building. For designated historic structures, waivers of code requirements may be requested.

These pre-fabricated steps are not compatible with the materials and character of this historic residence.

Exposure to the elements has caused cupping of the pressure-treated wood treads and led to the deterioration of the wood lattice.

Porch stair, pre-rehabilitation.

Through the introduction of inexpensive details such as bull-nosed edges and cove moldings on the stair treads, framed skirting below the stairs, narrowly spaced balusters, and a decorative newel post, the property owner has rehabilitated the porch shown on the left into a more compatible and value-adding asset.

PORCH HISTORY

Common to houses built between 1850 and 1930, porches are far more than the transition space between indoors and out. Porches join one part of a building to another, buffer a house set to close to a street, or add protected outdoor space where it is needed. Porches and front stoops also once played an important role in the social life of a neighborhood; they were excellent places to hear the latest news and ideal spots to catch cool summer breezes. Although such socializing is less common today, the high visibility of porches makes them an important part of a building's architectural character.

1. Early American hooded door

Porches have existed throughout history. The Greeks and Romans constructed columned galleries or verandas around open interior courtyards, and during the Renaissance, many public buildings featured protected arched walkways. The porches of early American homes were typically in the nature of hooded entrances (fig. 1). It was not until the nineteenth century when porches became widely used across the United States. Their popularity was due in part to the modern industrialization of the nation. This era not only created more free time from the endless chores of the earlier periods, but it made elaborate porches affordable to construct. Complicated porch shapes, decorative columns, and intricate cornice details--once expensive and difficult to construct--were readily available by the mid-nineteenth century with the proliferation of mechanized manufacturing techniques (figs. 2 and 3).

The nineteenth century also brought about architectural reforms. New architectural styles, such as the Greek Revival and Gothic Revival, reflected a sense of spirituality and country charm. The Stick Style and the Queen Anne style, with their open floor plans and large, wrap-around porches, expressed living patterns totally different from earlier generations.

2. Porch constructed with machined elements

3. Porch constructed with machined parts

Porches proliferated during this period, for they provided an escape from everyday life by bringing the homeowner in contact with the world of nature. The new porches also added charm, character, and richness to buildings.

Porches were a desired home feature until World War II. While earlier generations wanted a front porch for socializing, post-war families preferred the porch in back or on the side, overlooking the backyard or garden. At this time, the automobile had become the universal form of transportation, and moving the porch to the rear or side of the house removed the occupants from the traffic noise of the street (fig. 4).

4. Side porch

PORCH TRADITIONS IN PORTLAND

Many of Portland's existing buildings and neighborhoods were developed during the architectural reform period of the nineteenth century and early twentieth century. The buildings were constructed in architectural styles based on classical themes, including the Italianate (fig. 5), Second Empire (fig. 6), Queen Anne (fig. 7), Shingle Style (fig. 8), and Colonial Revival (fig. 9). Many of the buildings in Portland are eclectic--that is, they are built with several architectural influences in mind, a common building practice during the nineteenth and twentieth century.

Housewrights or builders designed and built the majority of houses during this period. Their knowledge of design was influenced by pattern books, lessons learned during their apprenticeship, and what other builders were constructing. Architects designed most of the high style houses. Although the architecture profession emerged in the United States in the first half of the nineteenth century, there were still relatively few architects by the beginning of the twentieth century.

Porches are integral components of many of these nineteenth-century buildings. Greek Revival residences often feature pedimented gable roofs supported on Doric or Ionic columns. Gothic Revival residences exhibit fancy scrolled machine-cut trim on many of their porches, while central one-bay porches and bracketed stoops are common features of

5. Italianate

6. Second Empire

7. Queen Anne

8. Shingle Style

9. Colonial Revival

the Italianate style. Most notably, the porches on Queen Anne and Stick Style residences are characterized by elaborate detailing, turned balusters, and ornate spindle work.

Although a porch usually exhibits stylistic features associated with a single architectural style, in the late nineteenth century it was not uncommon to mix elements from different styles. These "borrowed" elements are frequently found on porches of the Italianate, Second Empire, and Queen Anne styles. Therefore, a number of design options may be appropriate for the style of your building (see fig. 10).

10. Second Empire with Italianate elements

While some porches in Portland have plain posts or columns and minimal ornamentation (fig. 11), others have a great deal of decorative architectural trim and detailing (fig. 12). Early Italianate houses are more likely to have stoops than porches, which often feature impressive decoration. Where the houses have high foundations, the stoops have several steps. Stoops with ornate brackets are distinctive features of neighborhoods on the Portland peninsula (figs. 13 and 14).

11. Simple classical details

12. Porch with highly detailed trim

13.

14.

Common bracketed stoops

Another common theme in the design of traditional porches in Portland is the choice of construction material. Wood porches are the most prevalent type, but brick and masonry porches can also be found on some historic houses (fig. 15). Granite is a common building material used in the construction of steps and foundations on many porches in the area (fig. 16).

15. Masonry porch

16. Granite stoop

PRESERVATION CONSIDERATIONS

The following is an overview of porch repair and maintenance considerations. For more detailed technical information or assistance, contact the Historic Preservation Office of the Portland Planning Department.

Repair

Property owners can normally undertake most preventive and corrective maintenance procedures on their own. These include the cleaning of all surfaces and the painting of metal surfaces and woodwork, as well as more technical procedures such as repointing of masonry and the use of epoxy to consolidate damaged or rotted materials. A professional should be consulted if the task at hand is something new or uncomfortable to the owner. Consultation with a structural engineer experienced in historic preservation is recommended where structural problems need to be addressed, such as bulging walls, defective foundations, broken lintels, and detached brick veneers. The structural engineer should conduct non-invasive tests to determine the origins of the failure, the extent of damage, and the structural integrity of the overall building system.

Porches and stoops, whether original or later additions, should be preserved in their historic forms. If elements are deteriorated, they should be repaired to their original condition.

The leading causes of deterioration are water penetration, insect infestation, poor design and construction, and deferred maintenance. The source of the deterioration should be corrected prior to undertaking any repairs.

Intact historic features should be repaired and retained wherever possible. Any necessary repairs for porches should follow several basic principles common to the maintenance of historic buildings. These principles are set forth in the *Secretary of the Interior's Standards for the Treatment of Historic Properties.* Standards applicable to porch repair and replacement follow:

1. *Deteriorated architectural features should be repaired rather than replaced wherever possible.*

2. *When replacement of original building material is necessary, new materials should match the material being replaced in composition, design, color, texture and other visual qualities.*

3. *Replacement of missing architectural features should be accurately duplicated based on historical or physical evidence rather than conjecture.*

These principles recognize that historic materials and details have proven records for durability and compatibility, and that a small amount of maintenance at regular intervals avoids large investments in repairs down the road. If new materials are incorporated into the structure, care must be taken to assure that their physical properties do not conflict with the physical properties of surrounding materials. If materials are improperly applied, they may cause or accelerate physical deterioration of the historic building.

An example of this is the incorporation of copper into a building that already has aluminum, tin or iron elements. If the metals come directly into contact with each other, or indirectly by the flow of water, corrosion can occur in the original material because copper is higher on the galvanic scale.

Another example is repointing with Portland cement in an area where a lime mortar was used. Using Portland cement results in a mortar that is harder and stronger than the historic brick masonry units which, in turn, causes stresses between the brick unit and mortar joints. Often, these stresses are relieved through the bricks, resulting in cracking and spalling. Stresses also can break the bond between the mortar and the brick, allowing water to migrate through the resulting hairline cracks.

Selective Patching/Splicing

Deteriorated elements often can be restored in a cost-effective manner by treating them with preservatives or epoxies, or by replacing only severely damaged sections through patching and/or splicing. Repair deteriorated sections of elements by selective patching, splicing or piecing with in-kind materials and techniques. For wood elements, substitute in-kind with wood of the same species or another with a similar cut, moisture content, and material performance. If you find a minor patch of rot, remove all decayed wood until you reach sound material, then apply a preservative to reinforce any weakened fibers and seal the wood against future penetration. For large areas of decay, a patch, or dutchman, of matching wood should be used (see below).

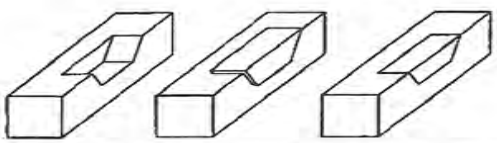

Installing a dutchman: First chisel out a cavity that is slightly larger than the area of decay. Cut a patch (slightly larger than the cavity) of timber with the grain running the same direction as the original wood. Shape the patch to match any undercuts, and leave it slightly oversized. Paint the prepared area and the new timber with a chemical preservative before gluing the patch in place with a waterproof synthetic resin adhesive. Once the glue has set, plane the patch flush, fill in gaps and paint.

Consolidation

Consolidation is another treatment option for severely deteriorated wood. Consolidants and patching compounds such as WoodEpox by Abatron and West Systems Brand can permit deteriorated original woodwork of historical value to be reconditioned and retained in-situ, and sometimes serve a load-bearing function. Wood consolidants restore strength and are impervious to water and insect damage. Epoxy consolidants are syrupy liquids that permeate porous or decayed woods and are applied to the deteriorated areas to saturate the decayed wood. Holes and gaps can be filled and built up with epoxy paste-fillers. When hardened, the consolidated area can be worked with ordinary tools, then primed and painted.

To date, no cost-effective processes or treatments for the reconsolidation of deteriorated brick are available. While reconsolidation techniques are being developed for stone, these techniques generally are not applicable to brick. In-kind replacement of masonry units remains the practical alternative for severely deteriorated brick.

Replacement

Replacement is usually considered the less desirable of all methods because it diminishes the amount of original historic fabric. New features should match that being replaced in composition, design, texture, and other visual qualities and, where possible, materials. Use the same species of wood or another with a similar cut, moisture content and material performance. Consider replacing decayed exterior woodwork with a sound substitute only when the wood has lost material integrity and ability to hold its surface coating.

If building features are missing, there is usually evidence around clapboards or under layers of paint that can help determine the size and profile of original elements. Modern moldings can sometimes be substituted for the historic pieces. Stock items can also be used to repair and replace lattice.

Replacement elements can be found through manufacturers who recreate nineteenth century millwork or at many stores in the area. *The Old House Journal Catalogue* lists suppliers of parts and services for preservation work. Architectural salvage companies may also have parts within their inventories that match your historic fabric. The stock of moldings currently available today is typically much smaller than what was available during the

mid- to late nineteenth century. Some of the common millwork used on porches in the area include ½" quarter rounds, crown moldings and dentils. A few examples are shown below.

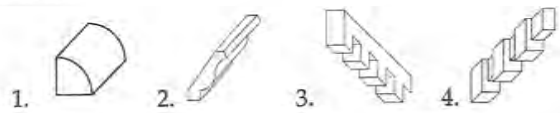

1. Quarter round, 2. Crown moulding, 3. Single-cut dentil, 4. Double-cut dentil

Equivalent pieces to these historic moldings are available through lumber supply stores and can be found within the Brockway-Smith Company's Brosco line of millwork or at Windham Millwork, Inc, Windam, ME; Black Mountain Wood Company, Portland, ME; or Forester Molding & Lumber, Leominster, MA. In certain cases, custom moldings may have to be specially cut at a mill that offers such service, such as Windham Millwork, Inc; Saco Bay Millwork, Gorham, ME; or Precision Millwork, South Portland, ME.* The drawings at the end of this brochure show how stock components can be used to reconstruct a historic porch that is missing.

Traditionally, softwoods such as white pine, fir, hemlock, and spruce were used in porch construction. It was not until the turn of the century that red cedar became widely available. Pressure-treated woods are not encouraged because the inconvenience of having to wait one year before painting the treated surfaces often results in the surfaces not being painted at all. Unpainted treated woods will begin to crack, split, and warp, and will have to be replaced eventually. If treated wood is to be used, it should only be used in areas that are not visible, such as the floor joists and ledgers. The chemicals used in pressure treating may pose a danger if skin comes in contact with the wood so decks, handrails, and stairs should not be built out of pressure treated wood.

Appropriate and Inappropriate Finishes

Painting is the appropriate treatment for wood porch elements in Portland. The colors should be appropriate to the style and setting of the building. Original paint colors for a building can be researched as a starting point for color selection. Most historic color schemes were fairly simple. Avoid varnishes, transparent stains, and bare, weathered wood. Varnish is not recommended for exterior surfaces. In addition to being historically inaccurate, varnish will break down through exposure to the elements faster than paint and primer. Masonry or stone materials should be left with their natural finish.

Regular cleaning is recommended as a treatment option to improve the appearance of masonry buildings or remove harmful pollutants on historic buildings. Although a variety of cleaning and waterproofing options are available on the market, many of these products are inappropriate for use on historic buildings. Use of harsh, abrasive methods of cleaning, such as sandblasting, powerful chemical cleaners, and mechanical cleaning, are not recommended because they can result in irreparable damage to historic surfaces. Stone and masonry surfaces should not be sandblasted.

Well-intentioned practices, such as the application of waterproof sealers over masonry, sandblasting, and repointing with Portland cement-based mortars, often exacerbate the materials deterioration process. A treatment that is appropriate for one situation may aggravate the condition for another situation. The greatest danger that surface coatings present to historic building materials is that they trap moisture within the construction, and eventually accelerate the deterioration process.

***The City of Portland does not promote these companies or their products. Many other companies provide the same services; these are just a few examples.**

MAINTENANCE

Protecting and maintaining porch elements through appropriate surface treatments will further the life span of the porch and its elements. Maintenance treatments include non-abrasive cleaning, repointing masonry, repair of deteriorated materials, limited paint removal, and re-application of protective coatings. Repainting elements on a routine basis helps to minimize moisture damage by ensuring that the element is protected.

Repointing is a necessary task that helps to extend the lifespan of a building and should be undertaken when mortar joints begin to deteriorate (Fig. 16). The mortar joints are an integral part of the wall's structure that serve as an expendable transmission layer to absorb and transfer water vapor and movement.

The following routine maintenance tasks should be followed:

Repointing Masonry

- Repoint only deteriorated mortar joints.

- Remove deteriorated mortar by hand-raking the joints to a depth of 1/2"-1", or a minimum depth of 2 1/2 times the width of the joint.

- *Do not* use power tools, such as electric saws, to remove mortar because they offer limited control and may cut into the brick and destroy historic fabric.

- Repointing mortar mix should match the original in strength, color, texture, and hardness.

- Finish joints should match the width and profile of original joints.

16. Brick foundation in need of repointing

Repairing Wood

- The source of wood decay should be identified and remedied *prior* to undertaking any repairs.

- Only replace wood that is severely deteriorated, leaving all sound wood intact.

- Repair cracks and holes with chemically compatible wood fillers or with wood splices. Use epoxies carefully, ensuring that their thermal and moisture properties match the surrounding wood.

Painting

- Remove loose, blistering, and excess paint. The paint should be removed by hand-scraping and sanding down to a sound surface. Eventually, all paint may need to be removed if there are so many layers built up that a new layer of paint will no longer adhere.

- A heat gun can be used in select locations, but must be monitored at all times to make sure the wood does not catch on fire. Lead paint may be present and precautions should be taken to remove and dispose of the paint according to state and local regulations.

- Replace missing screws or fasteners.

- Repaint the dry substrate using a primer and two finish coats of paint that are compatible with each other and from the same manufacturer. The primer coat should be an alkyd-resin (oil-based) paint and it is recommended that the finish coats also be alkyd resin. If an acrylic-emulsion (latex) paint is used as the finish coat, it can only be painted over with acrylic-emulsion paints in the future.

Maintenance Planning

Regular maintenance is the single most important step a property owner can take to ensure the long-term preservation of their porch. The one step that should take place without fail – at least twice a year - is a thorough inspection of the porch. Someone familiar with the proper condition of the porch elements should conduct this inspection. Special inspections should be carried out following severe weather or special conditions.

Following the inspection, immediate repair needs should be noted, and long-term needs updated. During the annual inspection, the roof should be assessed to make sure that all the roofing material is secure and that flashing is intact. Make sure that all painted surfaces are intact. There should be no blistering or peeling paint. Pay close attention to the porch floor. Any uneven areas or bouncing of the floor may indicate hidden deterioration. Closely examine the substructure of the porch. Check where the house and porch meet (sill or ledger board), along with the joists, beams, and piers, to monitor water damage or insect activity.

Columnar newel post on a Classical Revival dwelling.

For additional information:

Greater Portland Landmarks' Frances W. Peabody Library, 165 State Street, Portland, ME, 04101, (207) 774-5561

Heritage Preservation and National Park Service. *Caring For Your Historic House.* New York: Harry N. Abrams, Inc., 1998.

Kahn, Renee and Ellen Meagher. *Preserving Porches.* New York: Henry Holt and Company, 1984.

McAlester, Virginia and Lee. *A Field Guide to American Houses.* New York: Alfred A. Knopf, 1984.

The Old House Journal, Hanley-Wood, Inc. 1 Thomas Circle, NW, Washington, D.C 20005, (202) 736-3409

Victorian Architectural Details, Watkins Glen, N.Y.: The American Life Foundation and Study Institute, 1978.

Weeks, Kay D., and Anne E. Grimmer. *The Secretary of the Interior's Standards for the Treatment of Historic Properties with Guidelines for Preserving, Rehabilitating, Restoring, and Reconstructing Historic Buildings.* U.S. Department of the Interior, National Park Service, Cultural Resource Stewardship and Partnerships, Heritage Preservation Services, Washington D.C., 1995.

Weeks, Kay D., and David W. Look *Preservation Brief 10: Exterior Paint Problems on Woodwork.* National Park Service, Preservation Assistance Division, 1982.

4x4 solid wood post with a decorative finial

Appendix

PORCH COMPONENTS

A porch is composed of many elements, including stairs, balustrades, handrails, newel posts and columns. The terminology of these elements is illustrated in the diagram to the right.

While most porches include the same general components, the *style* of these components can vary considerably. For example, porches on early twentieth century Colonial Revival style houses often feature posts with turned ball finials. This stylistic detail would not be found on earlier buildings. Similarly, a porch hood supported by brackets is a hallmark of Italianate and Second Empire Style buildings, but would be inappropriate on a later residence. Therefore, before beginning a porch replacement project, homeowners should first identify the architectural style of their home and take note of the porch details that are typically associated with that style. To be successful, the replacement porch should be consistent with the style of the house.

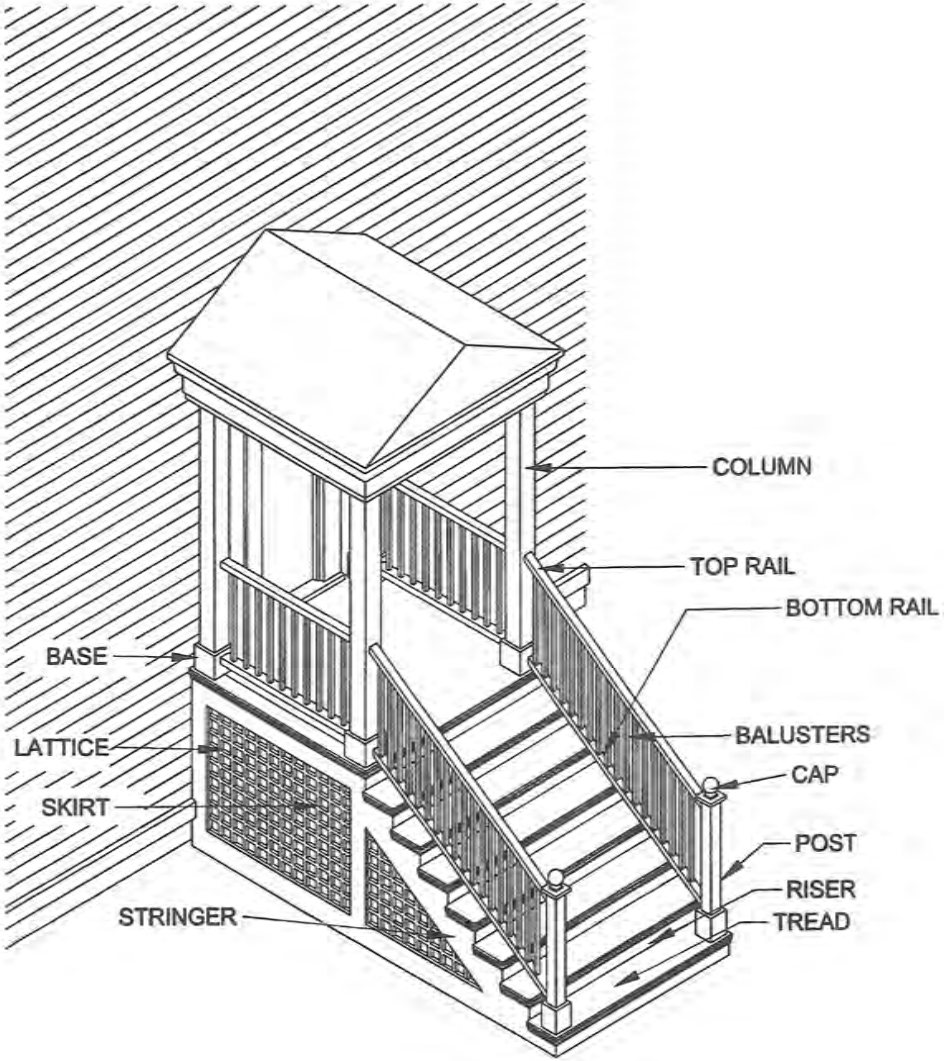

Diagram of typical porch components.

CODE CONSIDERATIONS

Some of the dimensions found in traditional porch construction might not meet current code requirements. For example, railing heights on historic porches typically range between 32 and 36 inches (see photo at right). In contrast, current building codes require a 42 inch railing height in many instances. The difference may seem inconsequential, but raising the height of a railing by just a few inches can have a significant impact on the proportions of a historic porch.

For buildings in historic districts, these code requirements can sometimes be waived when it can be demonstrated that safety will not be compromised. Waiver forms are available through the Building Inspections Office or the Historic Preservation Office of the Planning Department.

Many porches, particularly smaller stoops, were originally constructed without railings. When one undertakes a rehabilitation of a porch, current building codes may require the introduction of a railing. In these situations, a simple pipe rail may be introduced that will not detract from the architectural integrity of the porch (see photo at far right).

Example of a historic porch railing that does not meet current building code height requirements.

These metal pipe rails are a later, but compatible, addition to this Italianate-style stoop.

TYPICAL PORCH DETAILS

The following drawings illustrate typical porch components found on various historic styles of residential architecture. For any given style, there are usually several design options for such elements as balusters, posts, or skirting.

Many of these porch details are available through lumber supply companies as stock items. Some area companies include Windham Millwork, Inc, Windham, ME; Black Mountain Wood Company, Portland, ME; or Forester Molding & Lumber, Leominster, MA.*

In planning a porch project, property owners should determine appropriate stylistic details of the porch. Alterations or additions that have no historical basis or that seek to create a more historic or earlier appearance are not encouraged.

Most porches are very simple in design and detail. If a porch is to be added where one has been removed in the past, or if a porch is to be rebuilt or expanded, use a simple design that is of suitable proportion and style to the building. Avoid the addition of brackets, lattice, scrollwork, spindles, and other decorative details that might be inappropriate to the style of the house. Such features are appropriate only if physical or photographic documentation indicates they existed on the building in the past.

***The City of Portland does not promote these companies or their products. Many other companies provide the same services; these are just a few examples.**

Historic photographs can be extremely useful in recreating or remodeling a porch. The City of Portland's archives contain original 1924 photographs of every building standing at that time. Copies of these photographs are available through the Historic Preservation Office of the Planning Department.

Typical residential risers and treads

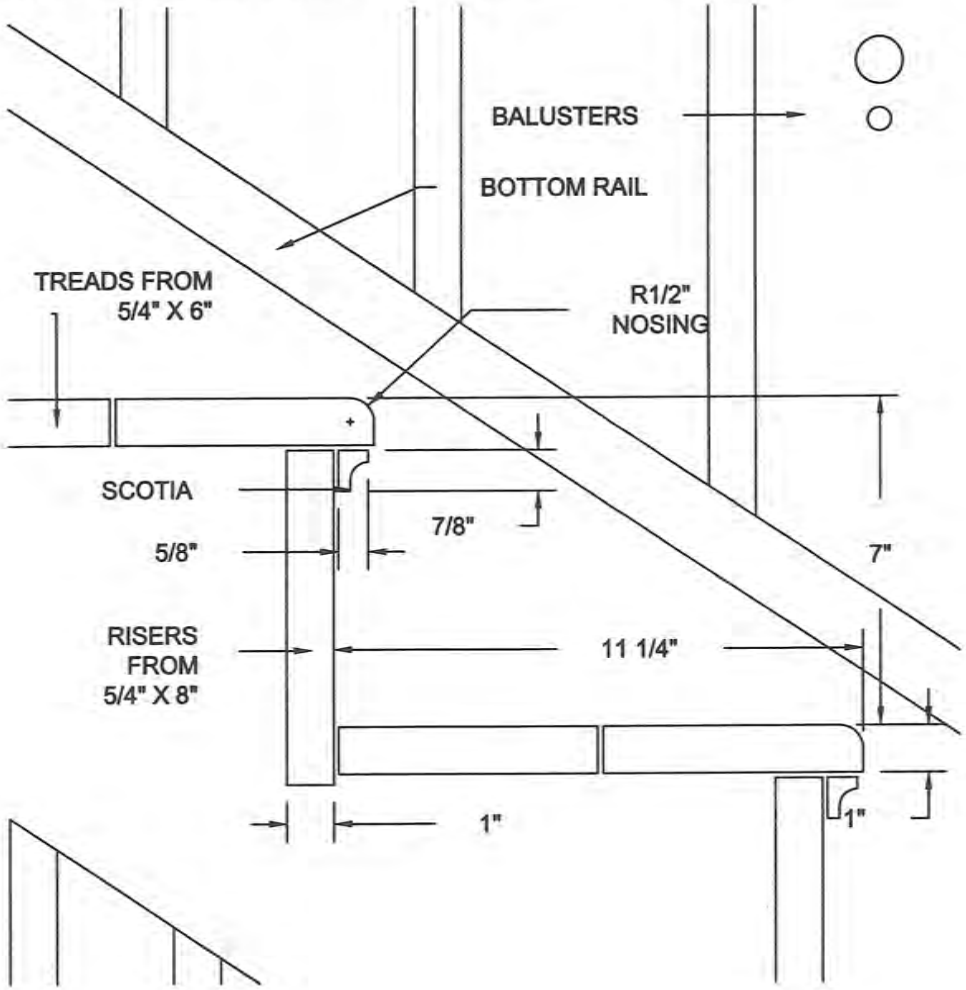

Typical newel post construction

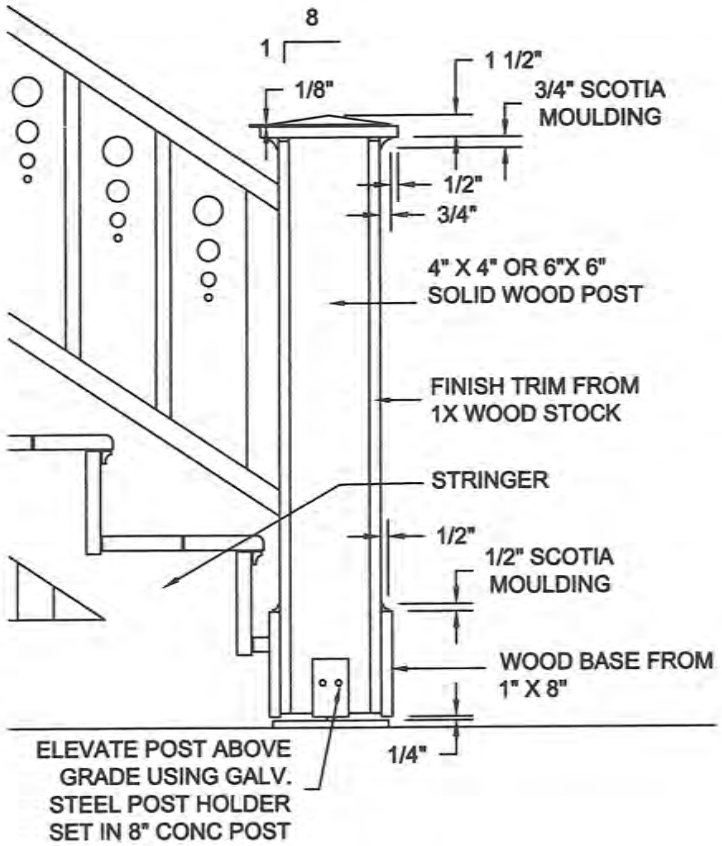

Alternate: Newel post may be bolted to a stringer.

Typical institutional risers and treads

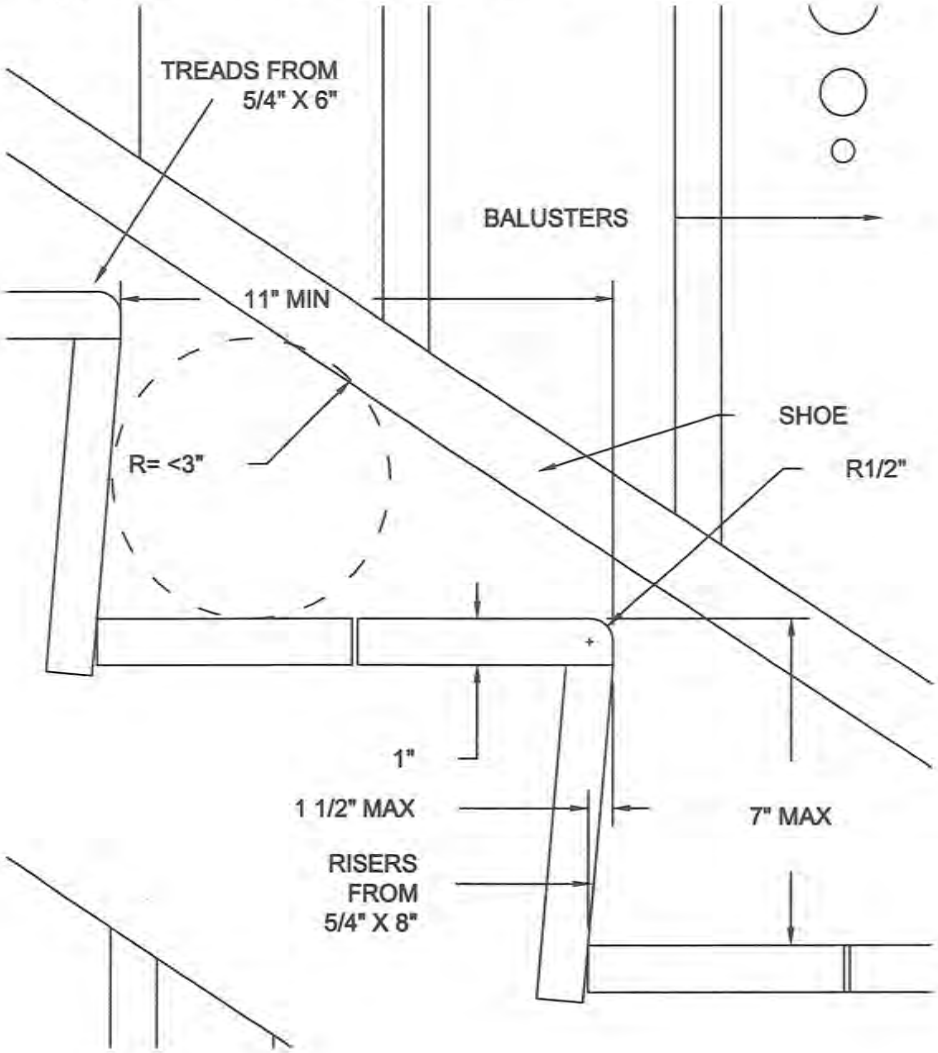

Addition of handrail to existing stair

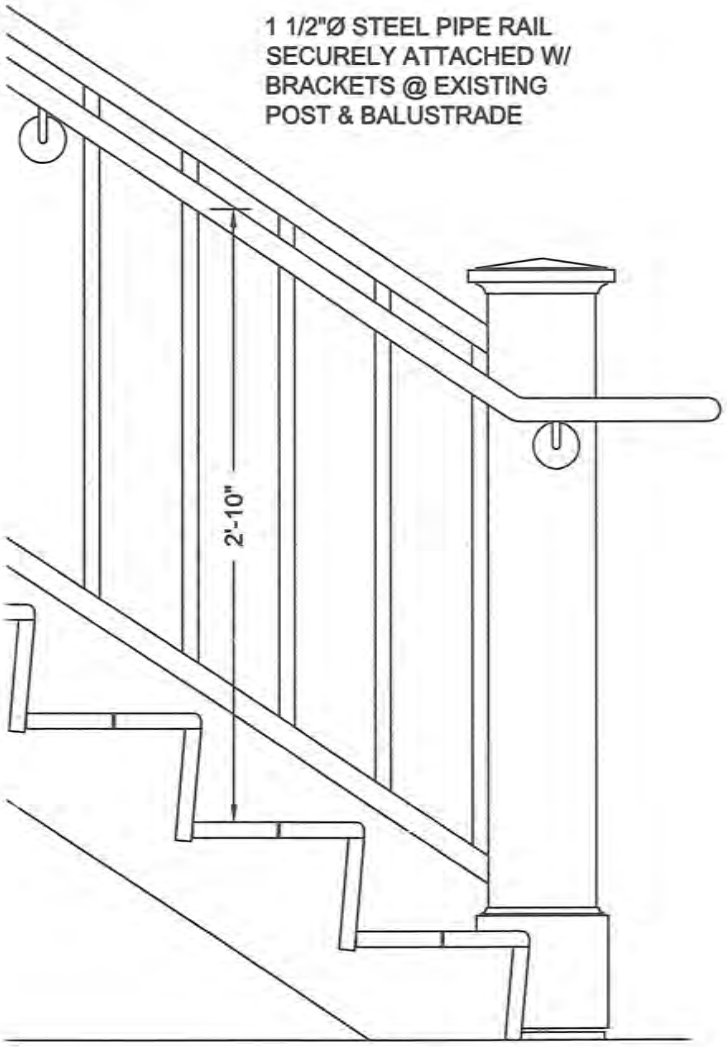

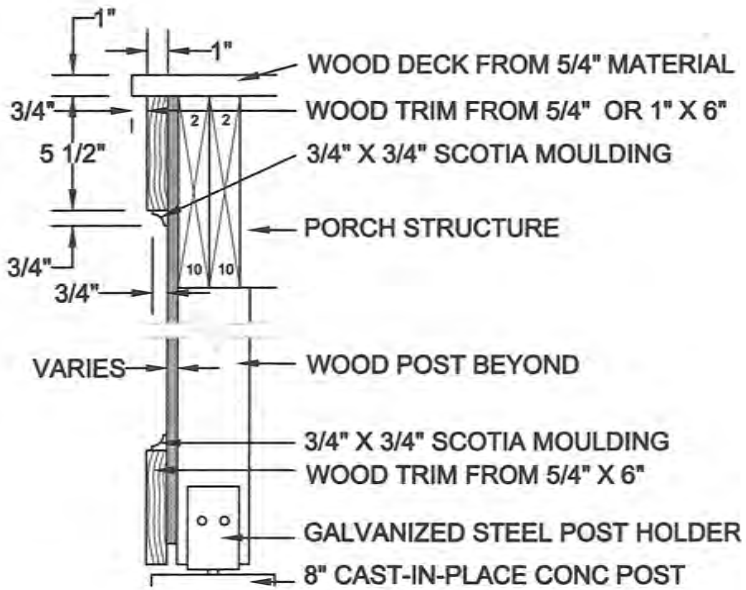

Construction of typical porch skirting

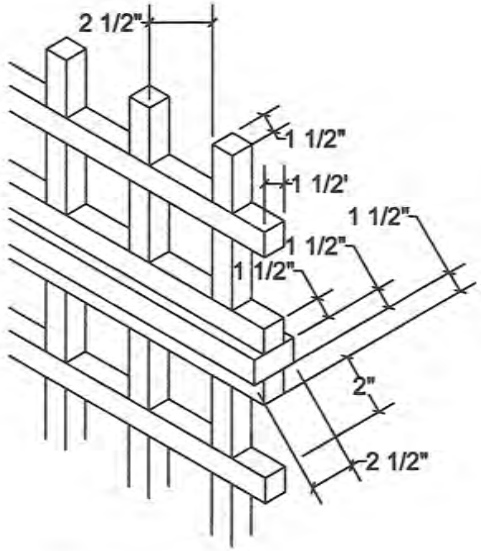

Lattice construction

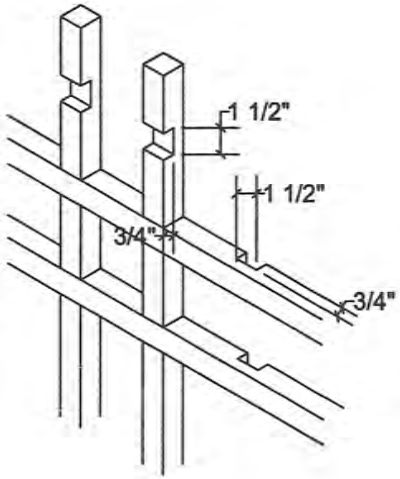

Lattice construction

Note: If prefabricated lattice is to be used, it should be the heaviest grade and highest quality material available.

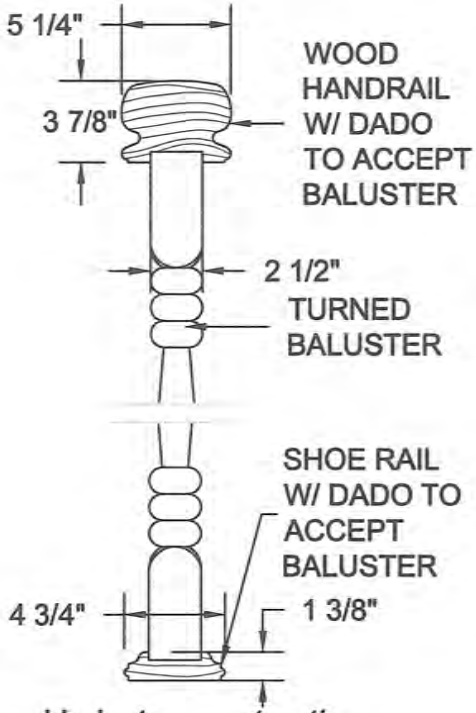

Turned baluster construction

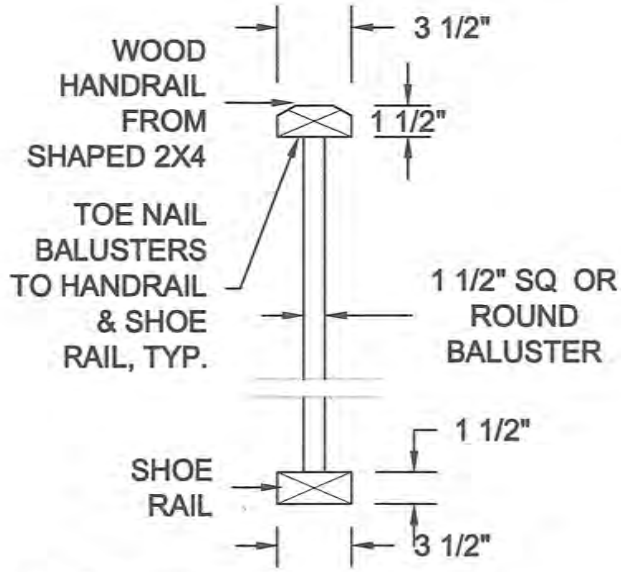

Baluster construction

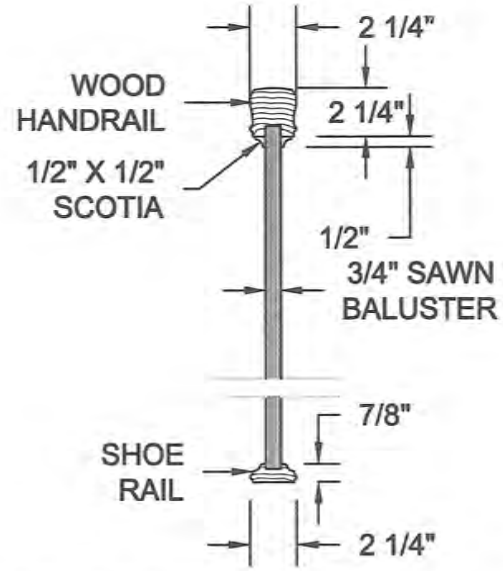

Baluster construction

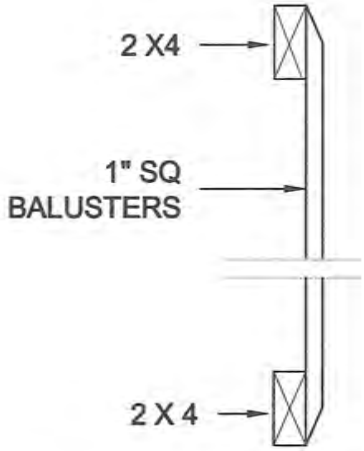

This type of baluster, while easy to construct, is not appropriate for traditional buildings.

COLONIAL & FEDERAL DETAILS

Colonial entry

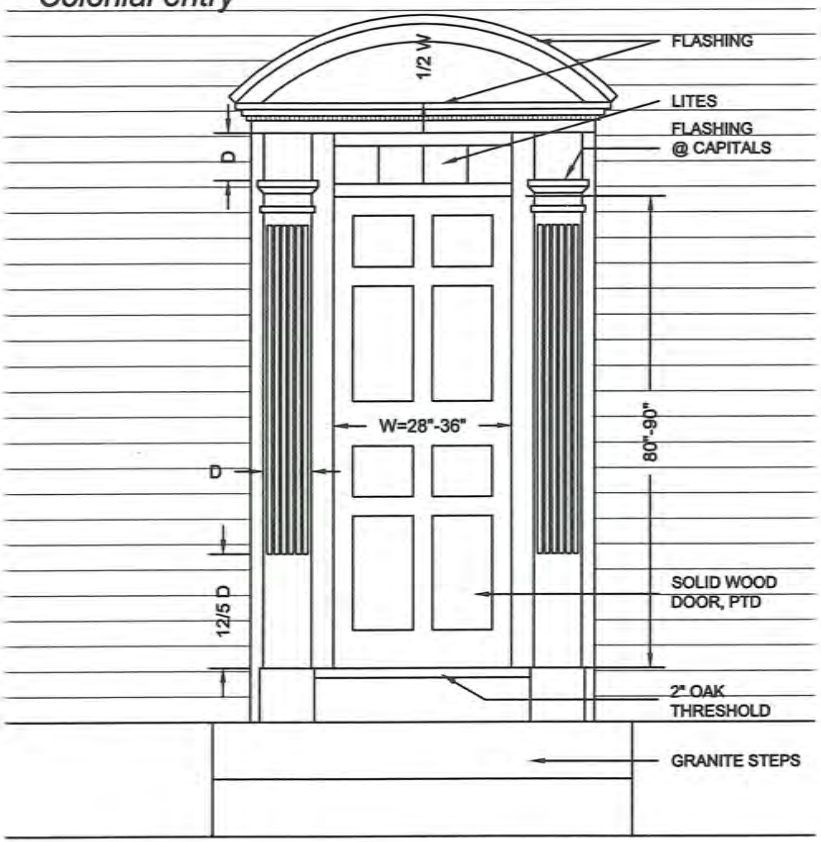

Federal entry

Colonial and Federal balusters

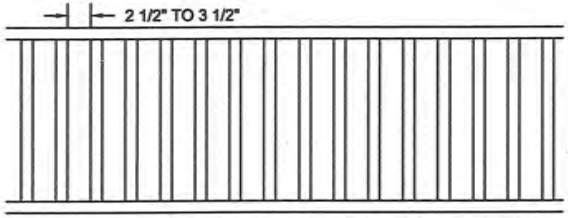

SQUARE OR ROUND BALUSTERS FROM 2" X 2" STOCK. FINISHED SIZE IS 1 1/2" X 1 1/2".

Colonial and Federal newel post

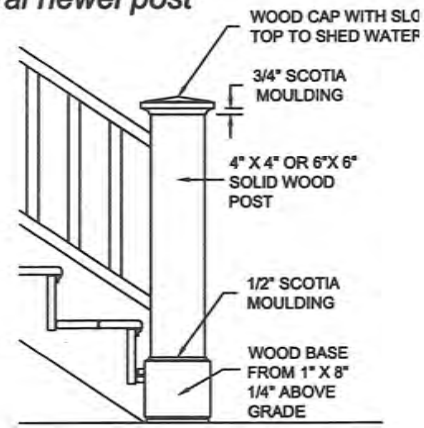

GREEK REVIVAL PORCH DETAILS

Greek Revival entry with granite steps.

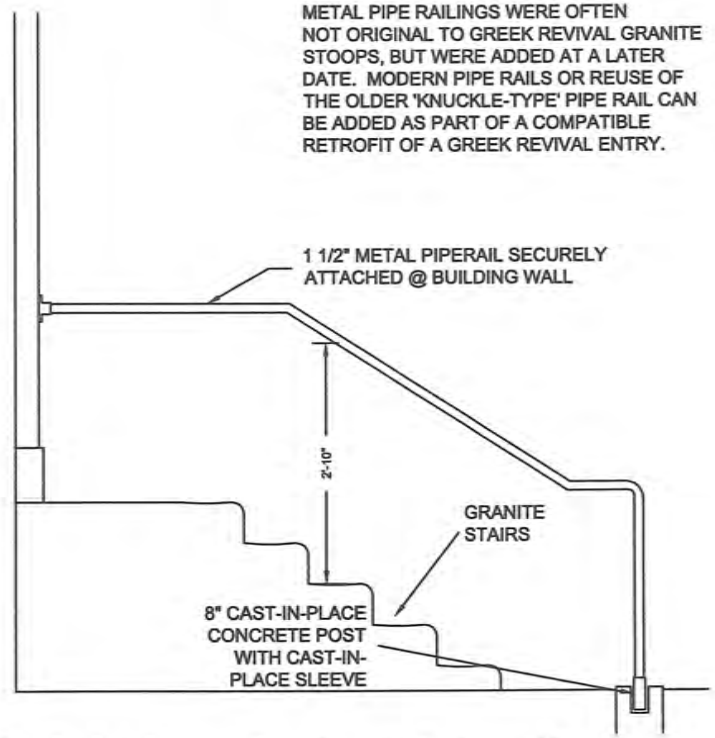

Greek Revival entry porch with metal pipe railing.

Greek Revival entry porch with wood stairs and rail.

Typical Greek Revival Balusters

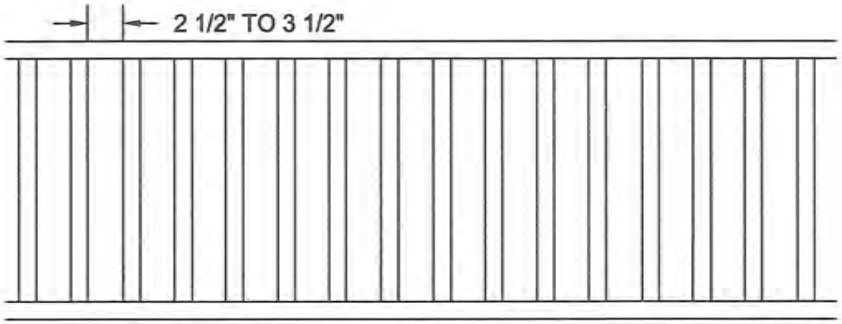

SQUARE OR ROUND BALUSTERS FROM 2" X 2" STOCK. FINISHED SIZE IS 1 1/2" X 1 1/2".

Typical Greek Revival Porch Skirting

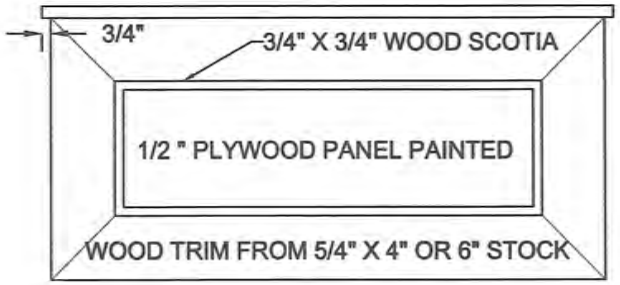

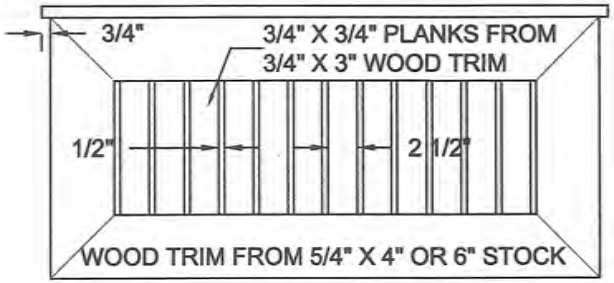

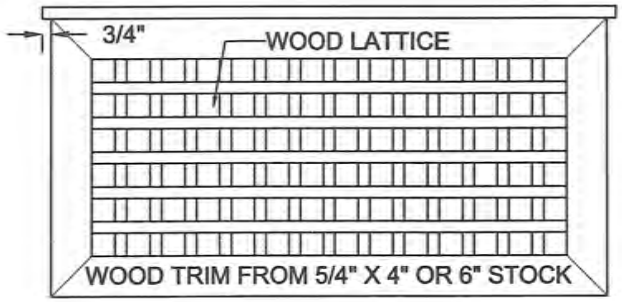

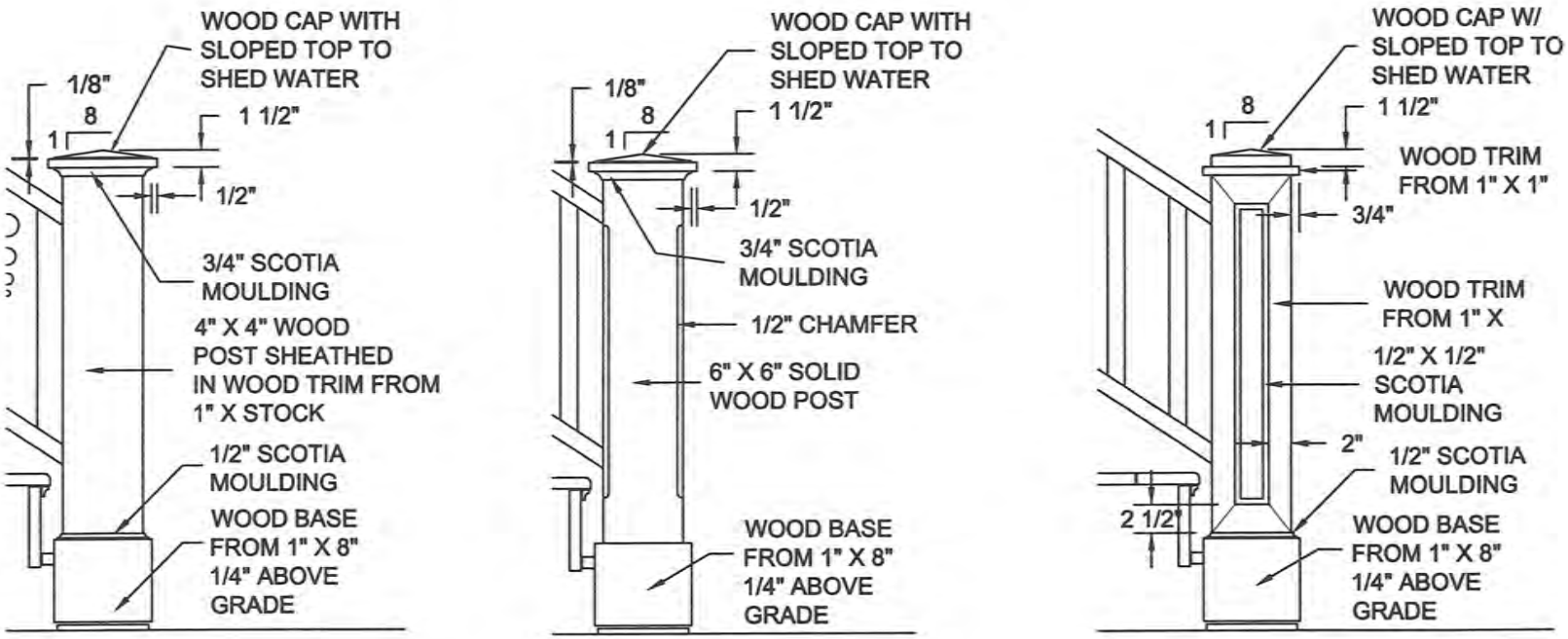

Typical Greek Revival Newel Posts.

ITALIANATE & SECOND EMPIRE DETAILS

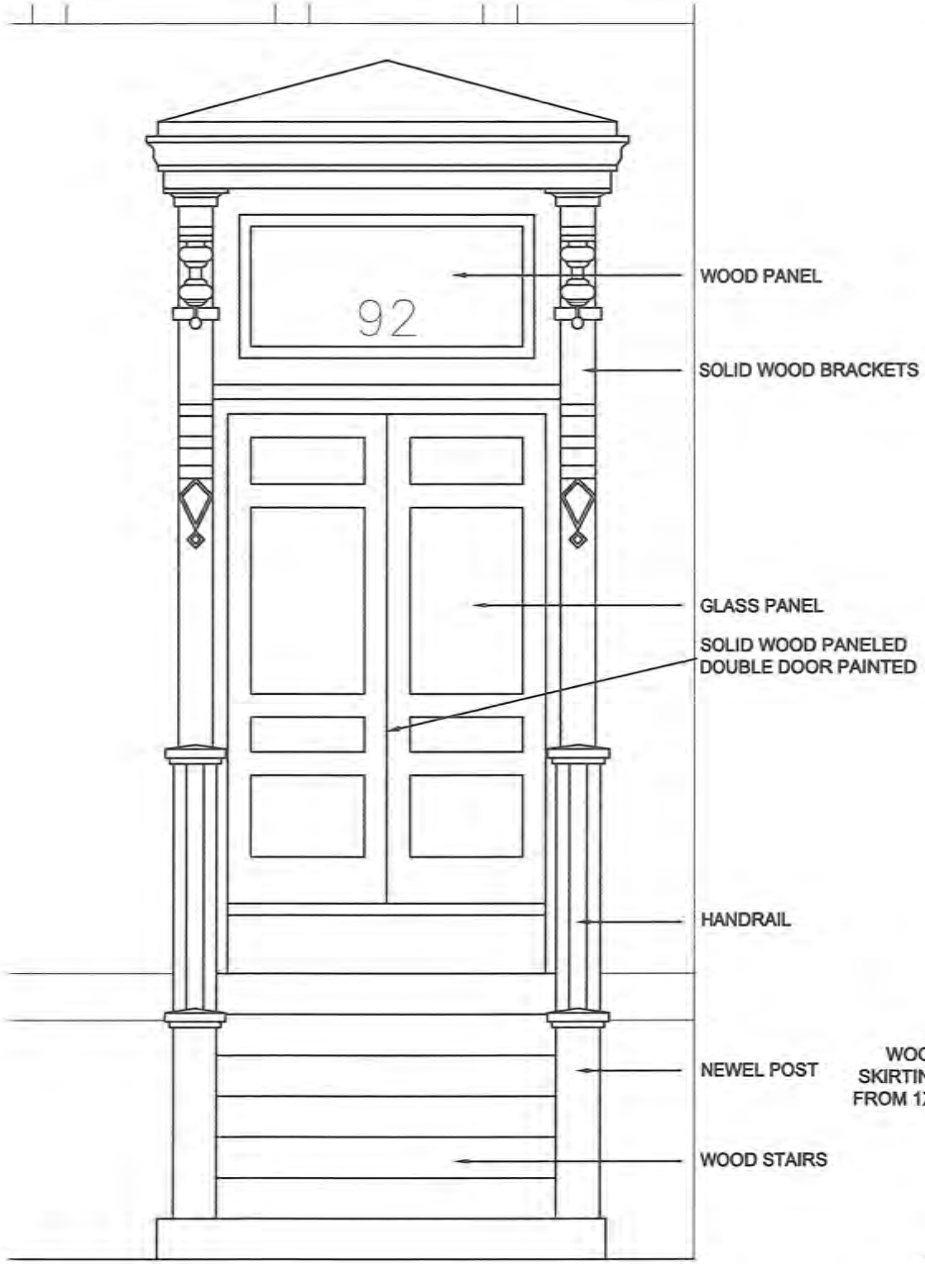

Italianate or Second Empire wood frame stoop.

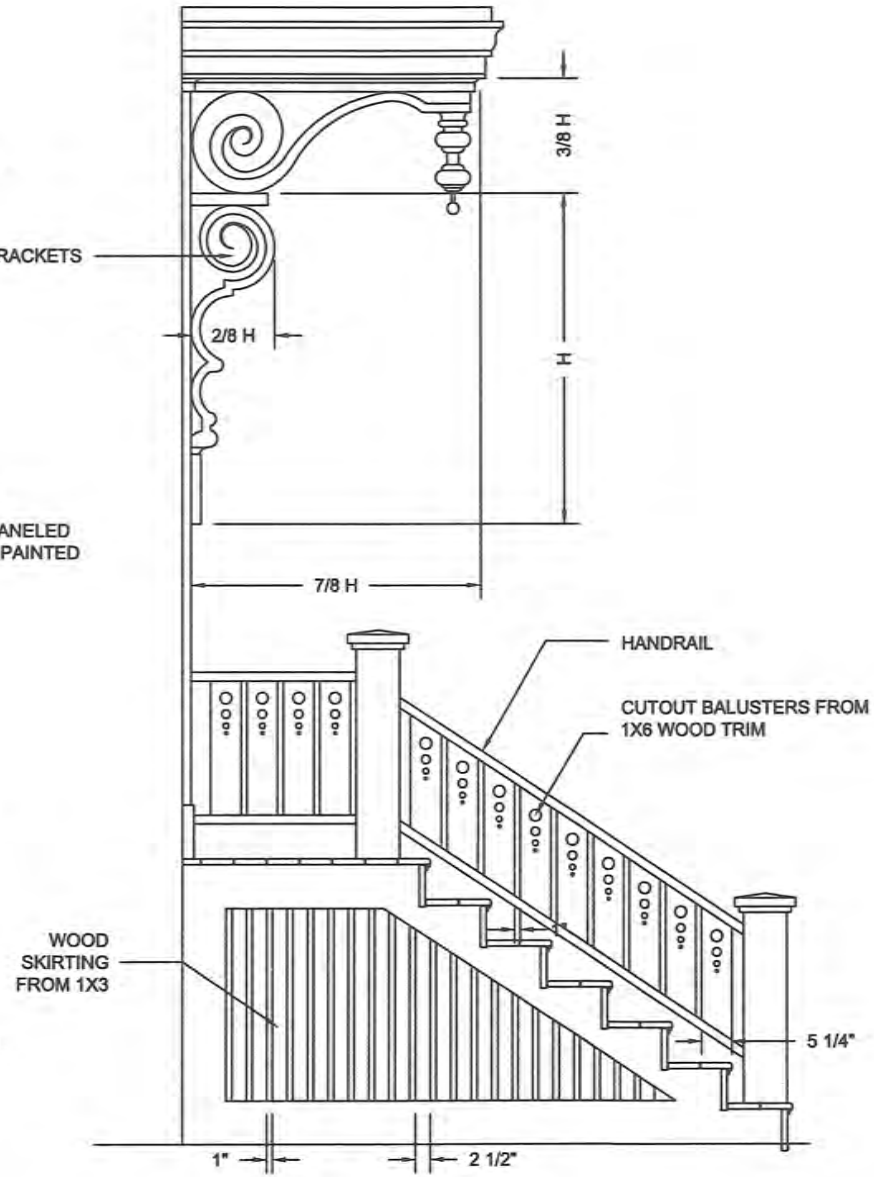

Italianate or Second Empire granite stoop.

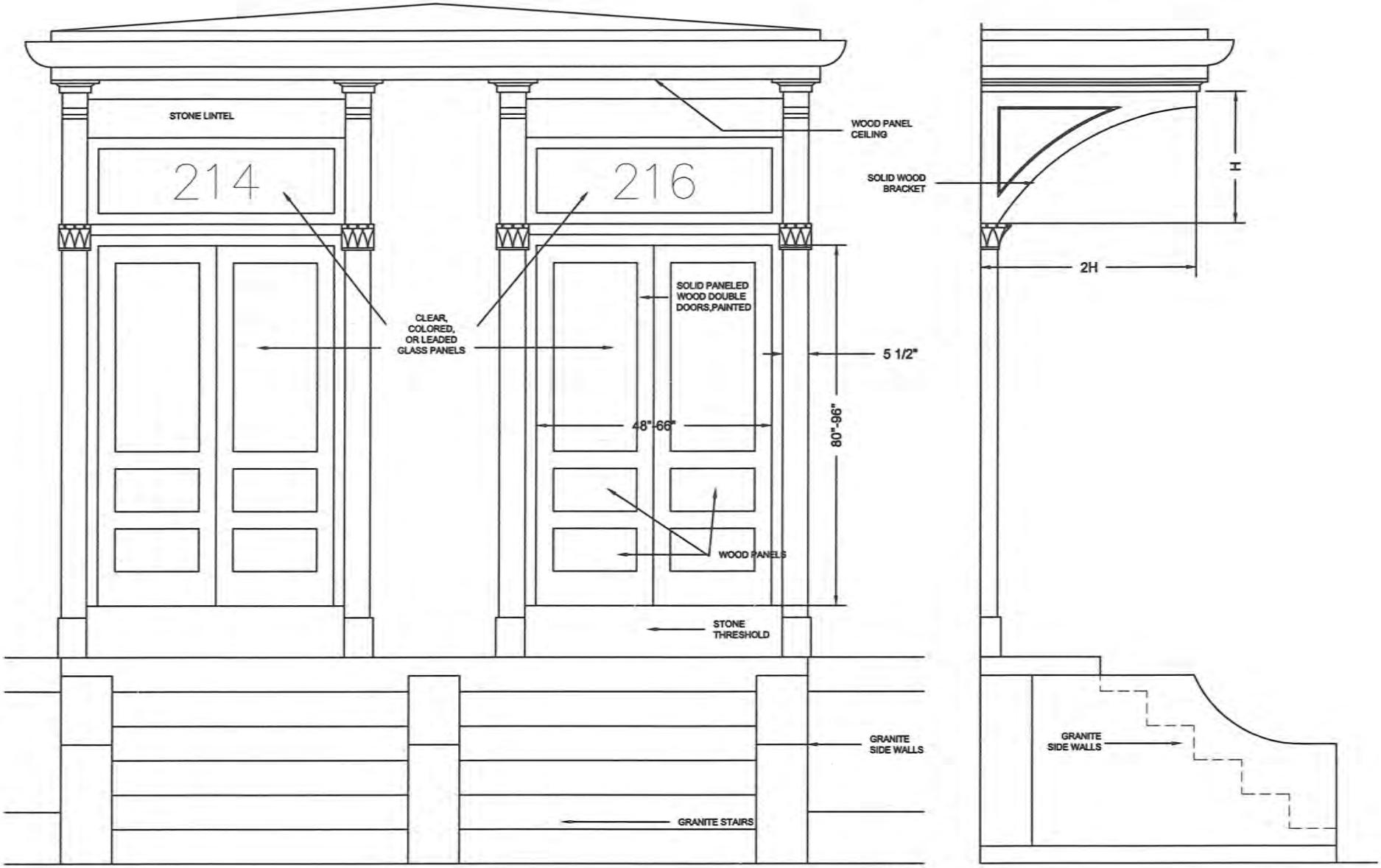

Typical Italianate and Second Empire balusters and porch skirting.

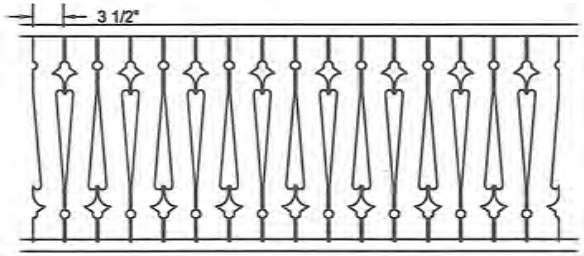

SAWN BALUSTERS FROM 1" STOCK OR 3/4" PLYWOOD. AVAILABLE IN 27" HEIGHT. ACTUAL THICKNESS IS 3/4". PATTERNS MAY VARY.

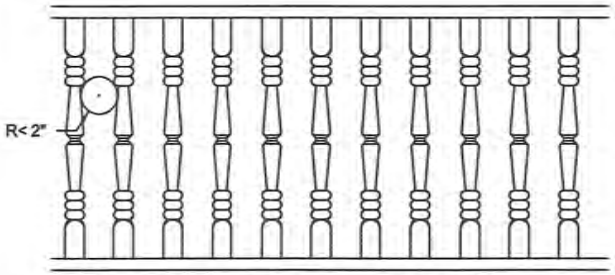

TURNED BALUSTERS FROM SOLID 3" X 3" CLEAR HEART CEDAR. AVAILABLE IN EITHER 32" OR 36" HEIGHT. FINISHED SIZE IS 2 1/2" X 2 1/2". PATTERNS MAY VARY.

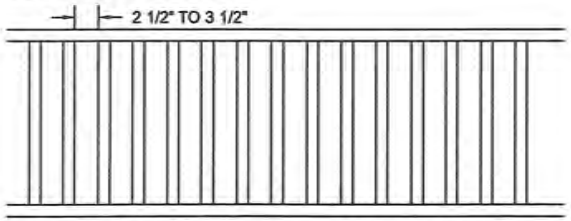

SQUARE OR ROUND BALUSTERS FROM 2" X 2" STOCK. FINISHED SIZE IS 1 1/2" X 1 1/2".

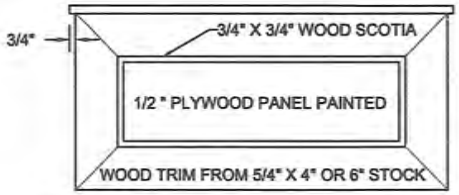

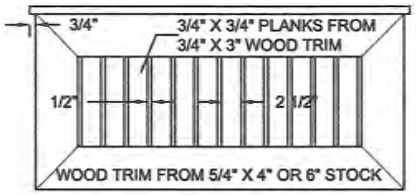

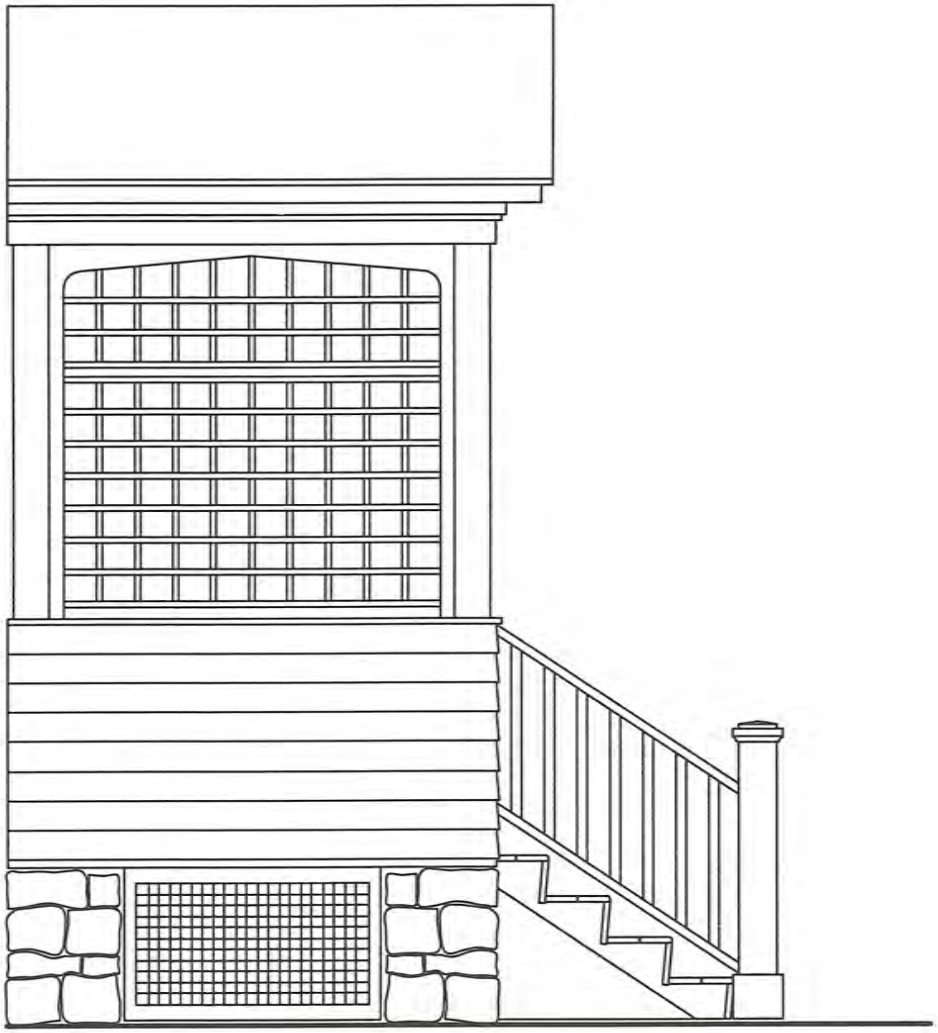

Queen Anne porch with lattice infill.

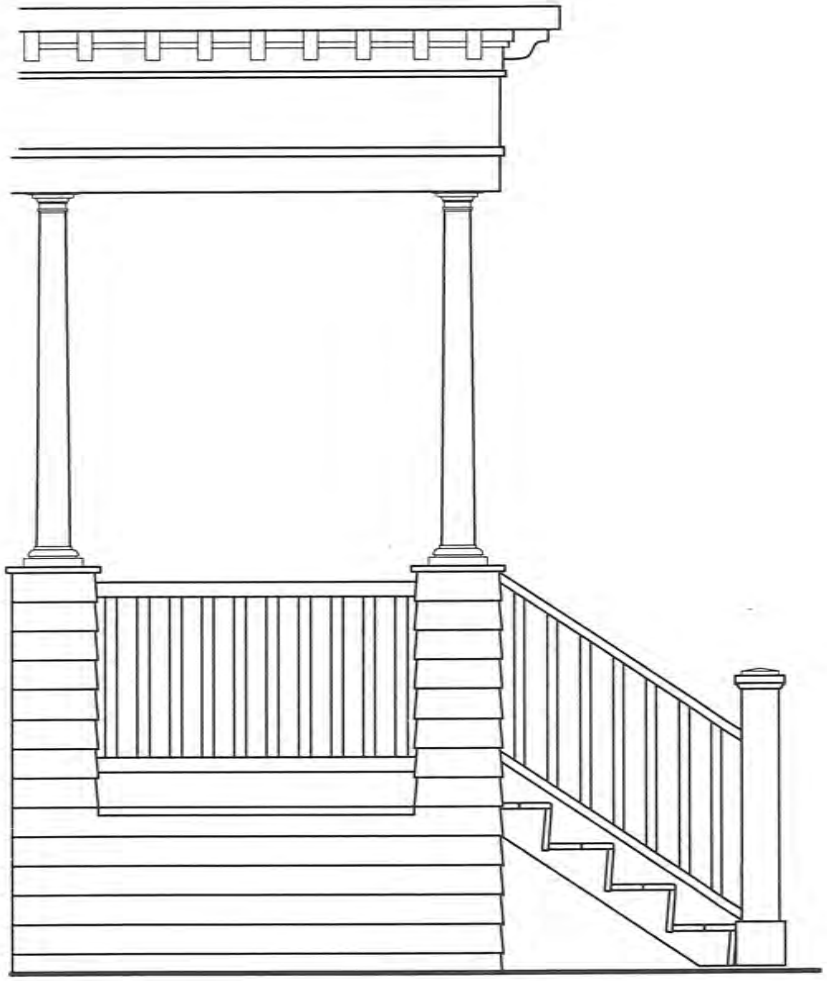

Queen Anne porch with shingle column bases.

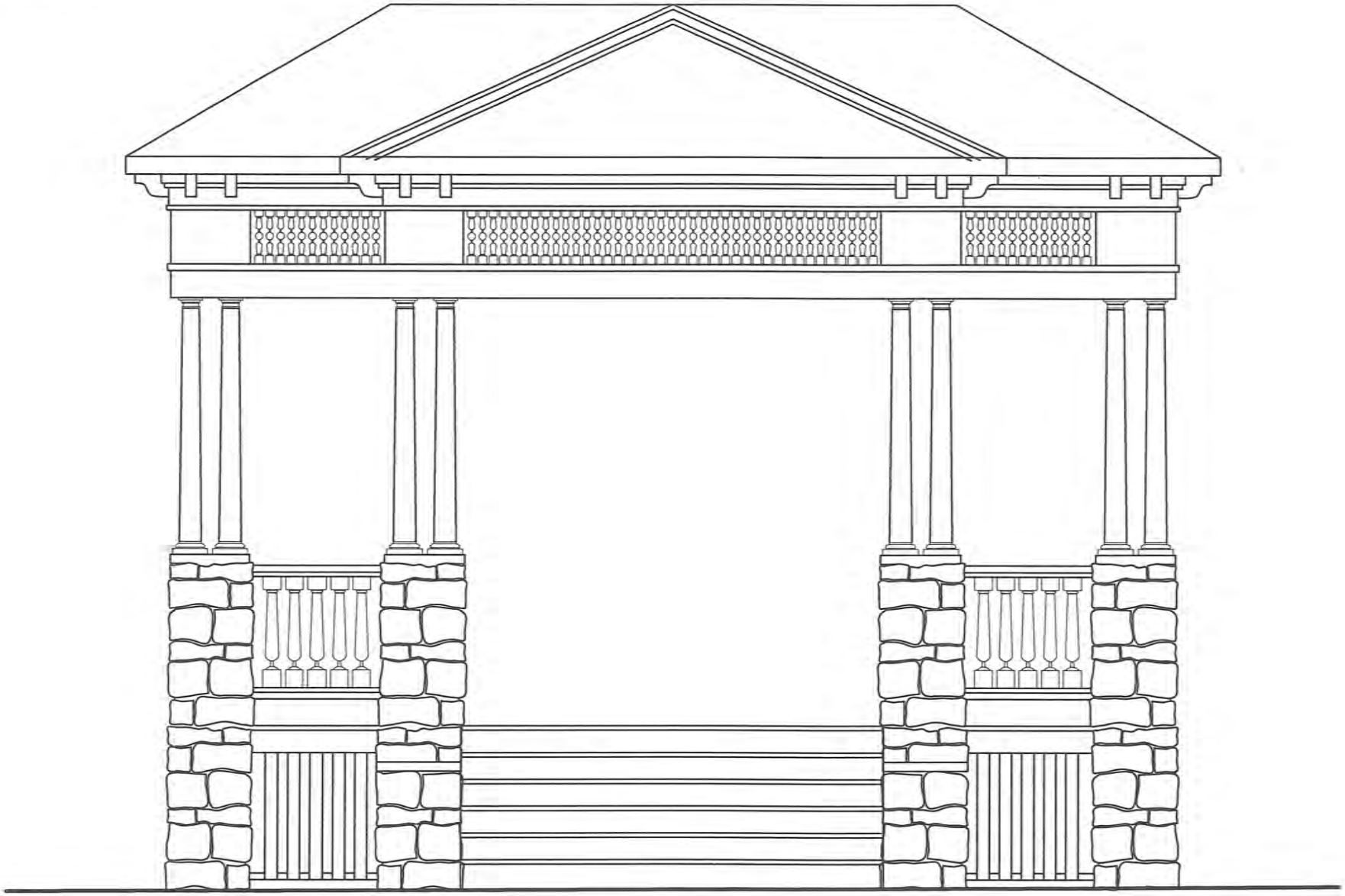

Queen Anne porch with paired columns and stone base.

Typical Queen Anne Balusters

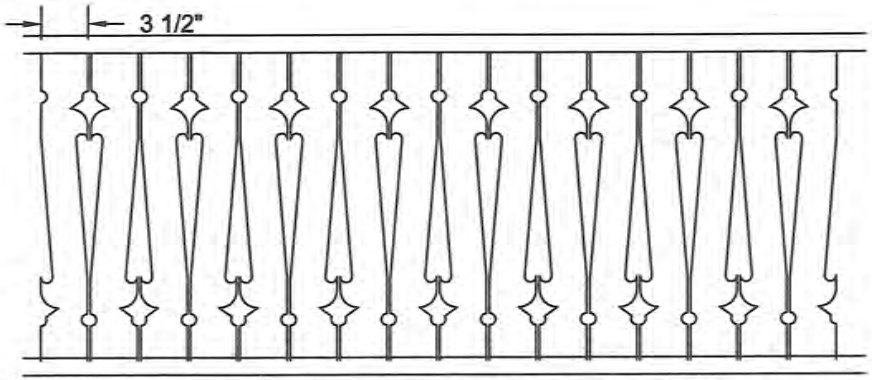

STOCK SAWN BALUSTERS FROM 1" STOCK OR 3/4" PLYWOOD. AVAILABLE IN 27" HEIGHT. ACTUAL THICKNESS IS 3/4". PATTERNS MAY VARY.

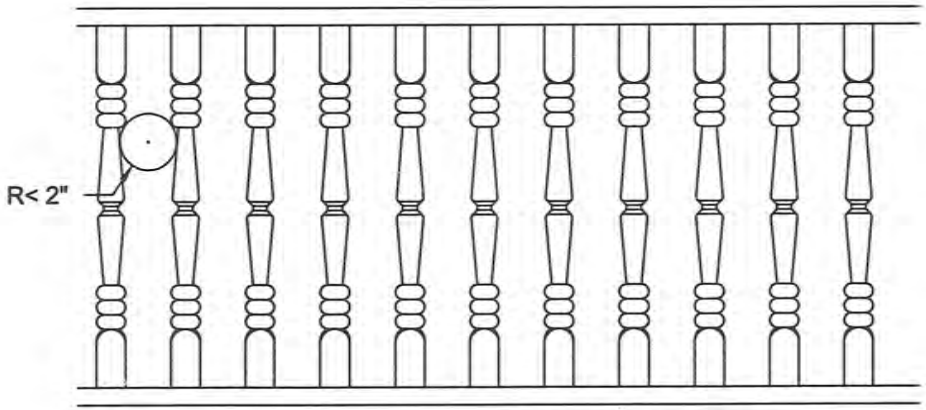

STOCK TURNED BALUSTERS FROM SOLID 3" X 3" CLEAR HEART CEDAR. AVAILABLE IN EITHER 32" OR 36" HEIGHT. FINISHED SIZE IS 2 1/2" X 2 1/2". PATTERNS MAY VARY.

Typical Queen Anne Porch Skirting

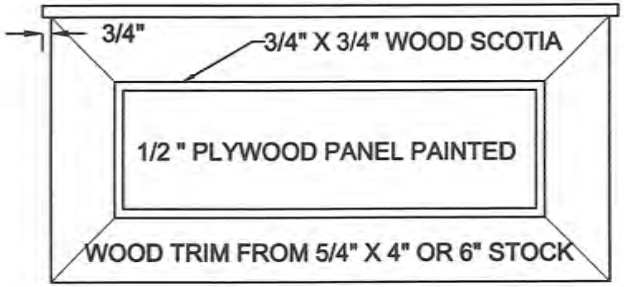

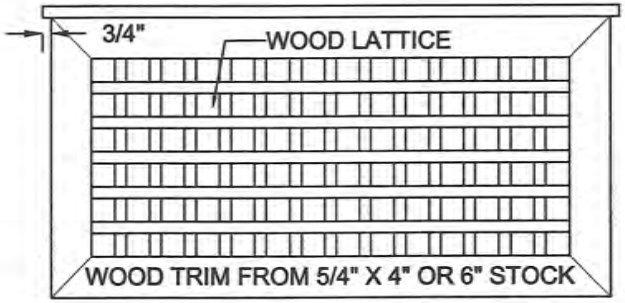

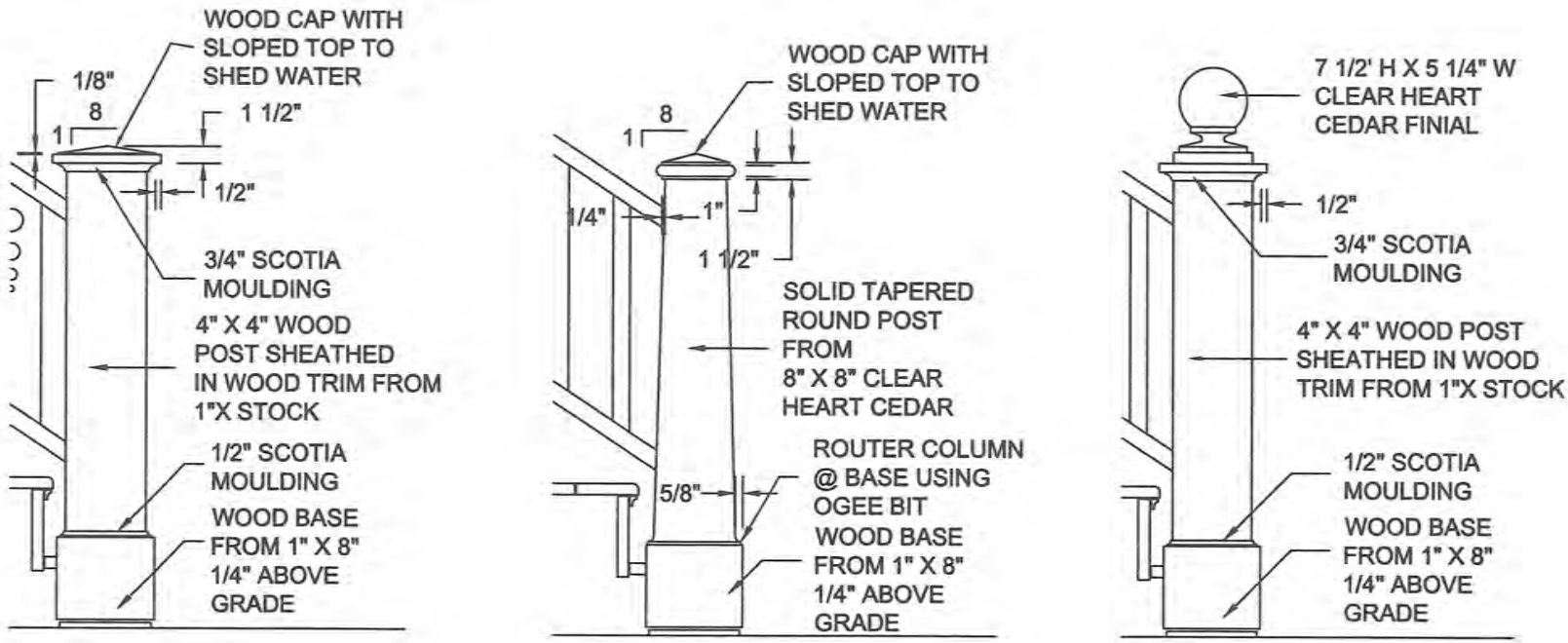

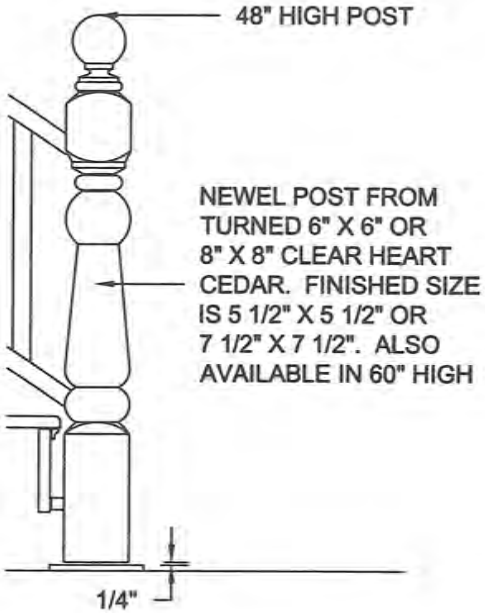

Typical Queen Anne Newel Post Details.

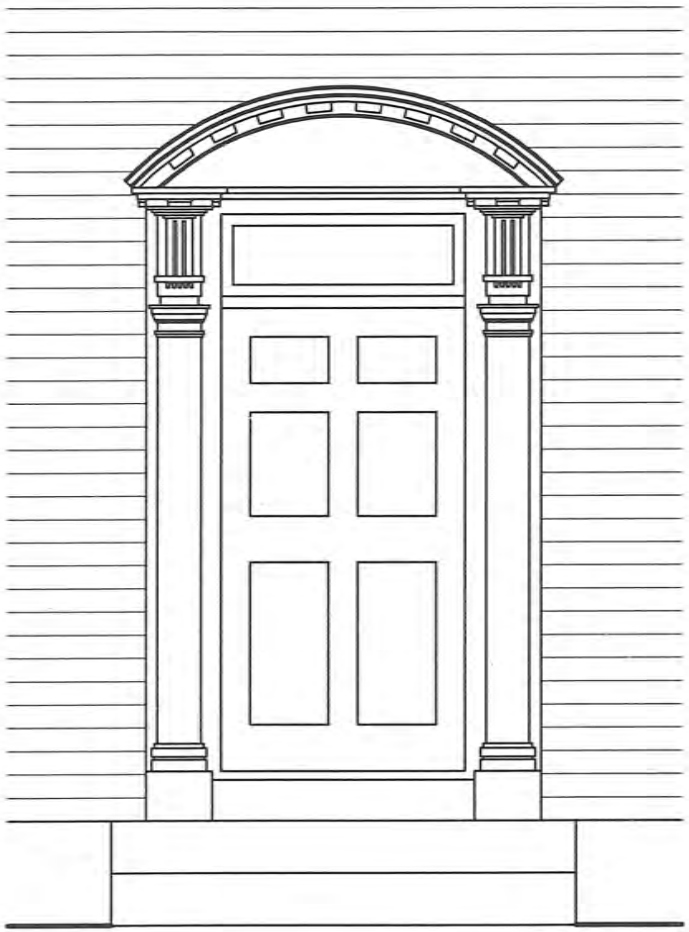

Colonial Revival entry

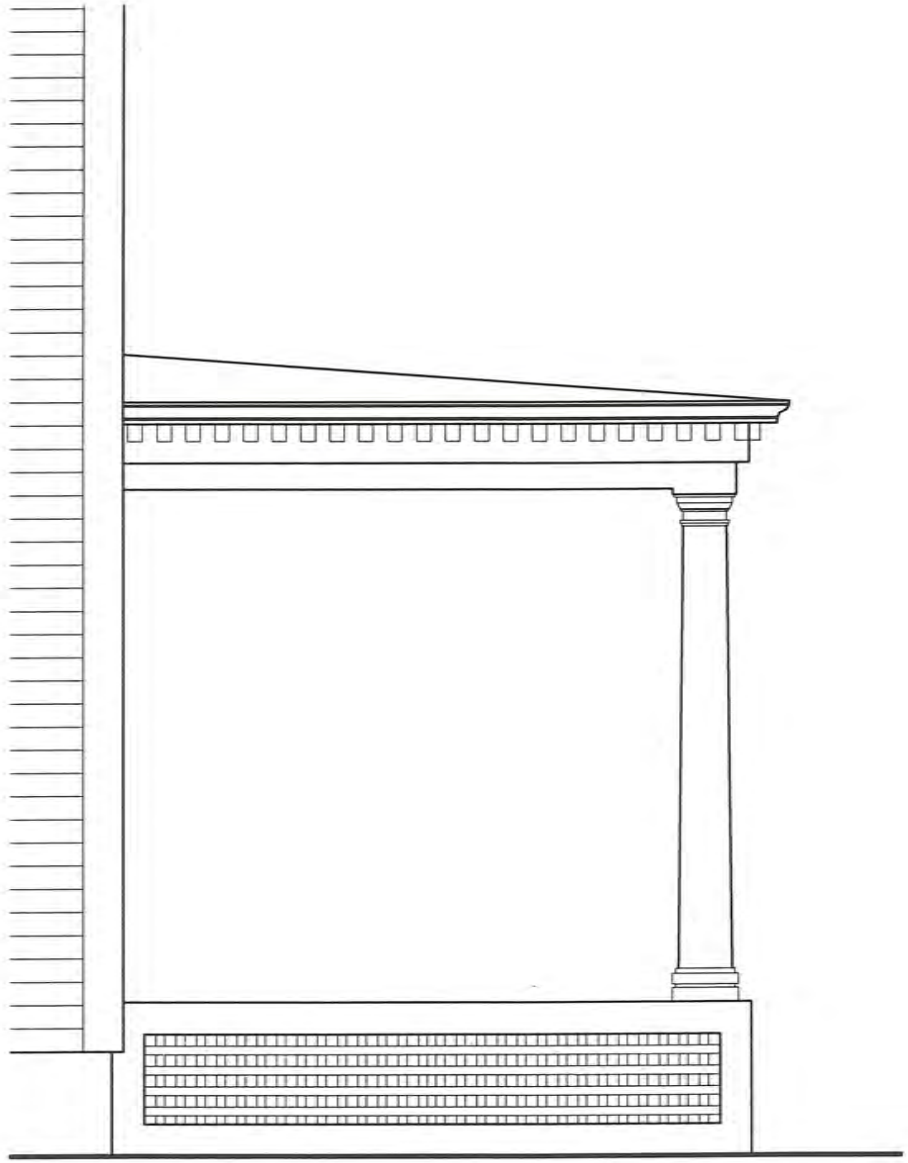

Colonial Revival side porch

Colonial Revival newel posts

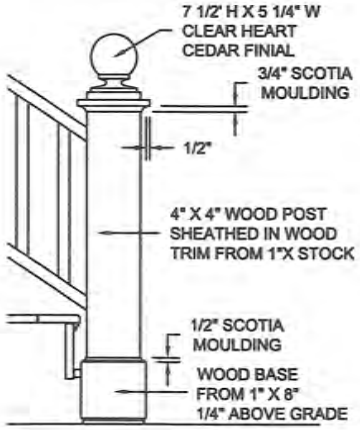

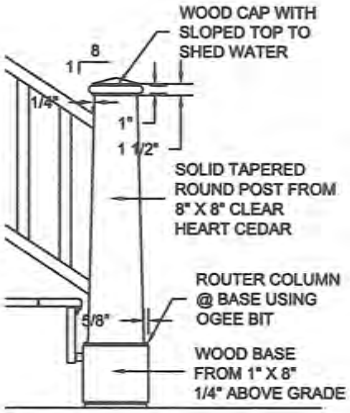

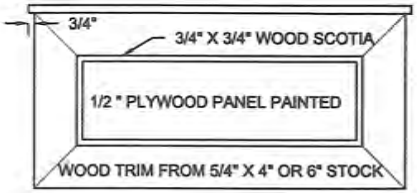

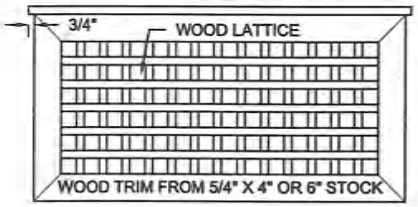

Colonial Revival porch skirting

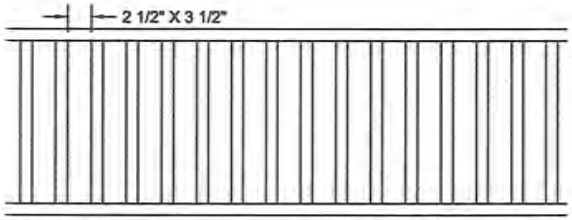

SQUARE OR ROUND BALUSTERS FROM 2" X 2" STOCK. FINISHED SIZE IS 1 1/2" X 1 1/2".

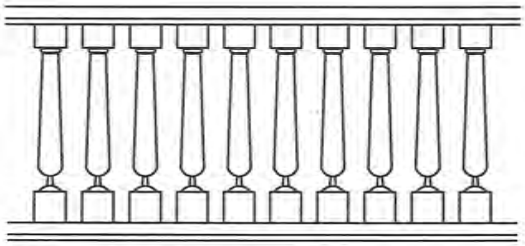

TURNED BALUSTERS. PATTERN MAY VARY.

Colonial Revival baluster