PROPOSED CAPISIC MEADOWS SUBDIVISION
130 BANCROFT STREET, PORTLAND, MAINE

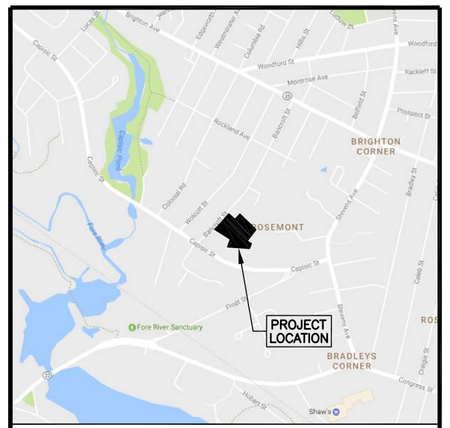

VICINITY MAP
SCALE: 1" = 1/4 MILE

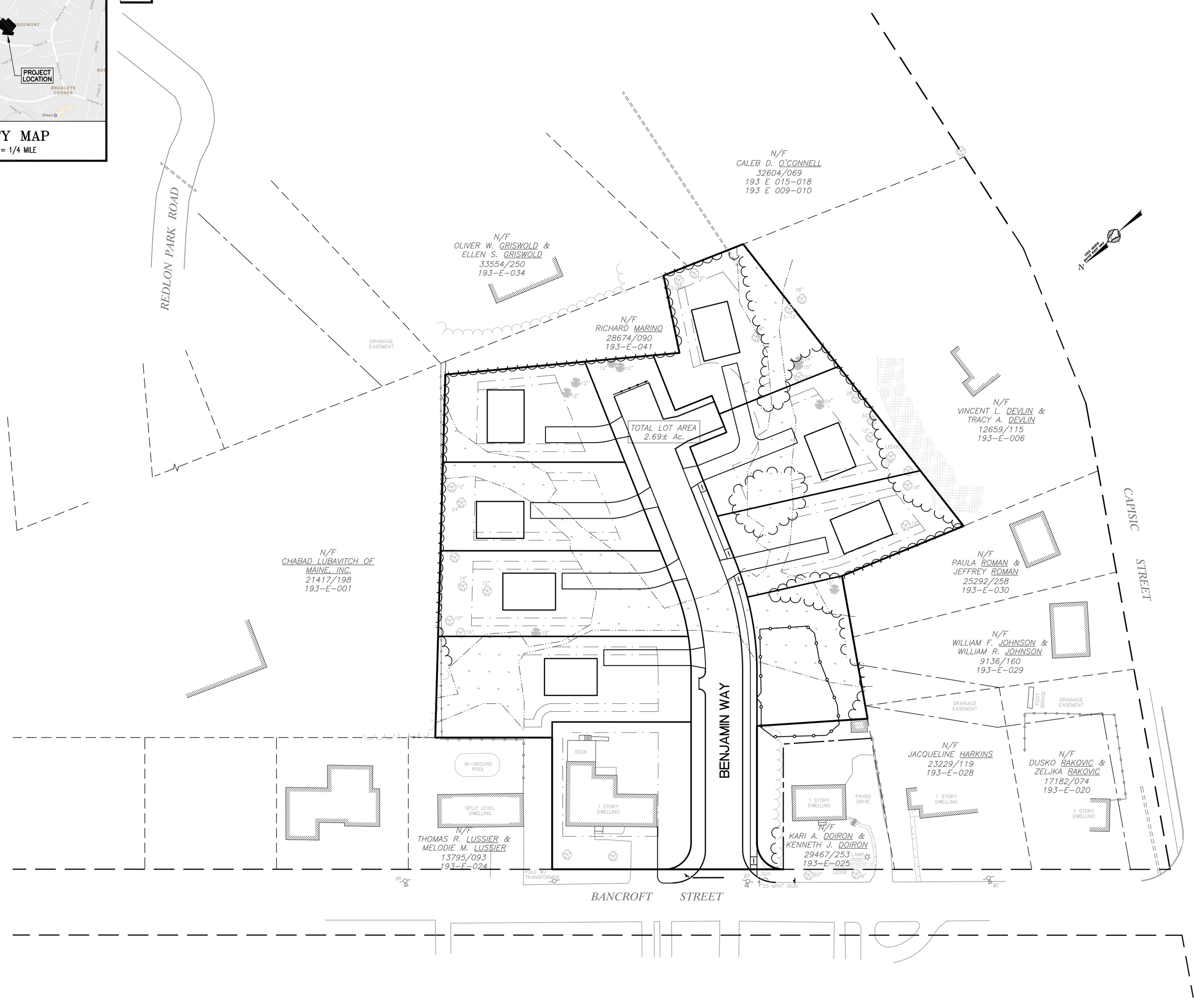

SHEET INDEX

1. COVER/INDEX/VICINITY MAP
2. BOUNDARY & TOPOGRAPHIC SURVEY
3. SUBDIVISION PLAN
4. PLAN & PROFILE
5. GRADING & DRAINAGE PLAN
6. UTILITY PLAN
7. EROSION & SEDIMENTATION CONTROL PLAN
8. EROSION & SEDIMENTATION CONTROL NOTES AND DETAILS
9. CONSTRUCTION DETAILS – SHEET 1
10. CONSTRUCTION DETAILS – SHEET 2
11. CONSTRUCTION DETAILS – SHEET 3
12. CONSTRUCTION DETAILS – SHEET 4
13. CONSTRUCTION DETAILS – SHEET 5
14. CONSTRUCTION DETAILS – SHEET 6
15. SITE LAYOUT, LANDSCAPE & TREE SAVE PLAN

PRE–DEVELOPMENT DRAINAGE AREA PLAN

POST–DEVELOPMENT DRAINAGE AREA PLAN

ABUTTERS

ASSESSOR'S MAP	PARCEL NUMBER	OWNER'S NAME
193–E	1	CHABAD LUBAVITCH OF MAINE, INC. 101 CAIGIE STREET, PORTLAND, ME 04102 BOOK 21417, PAGE 198
193–E	34	OLIVER W. GRISWOLD 7 ELLEN S. GRISWOLD 38 REDLON PARK ROAD, PORTLAND, ME 04102 BOOK 33554, PAGE 250
193–E	41	RICHARD MARINO 38 REDLON PARK ROAD, PORTLAND, ME 04102 BOOK 28674, PAGE 90
193–E	15 – 18 9 & 10	CALEB D. O'DONNEL BOOK 32604, PAGE 69
193–E	6	VINCENT L. DEVLIN 99 CAPISIC STREET, PORTLAND, ME 04102 BOOK 12659, PAGE 115
193–E	30	PAULA ROMAN & JEFFERY ROMAN 60 WOODVALE STREET, PORTLAND, ME 04102 BOOK 25292, PAGE 258
193–E	29	WILLIAM R. JOHNSON & WILLIAM F. JOHNSON 119 CAPISIC STREET, PORTLAND, ME 04102 BOOK 9136, PAGE 160
193–E	28	JACQUELINE HARKINS 154 BANCROFT STREET, PORTLAND, ME 04102 BOOK 23229, PAGE 119
193–E	20	DUSKO RAKOVIC & ZELKA RAKOVIC 164 BANCROFT STREET, PORTLAND, ME 04102 BOOK 17182, PAGE 74
193–E	24	THOMAS R. LUSSIER & MELODY M. LUSSIER 126 BANCROFT STREET, PORTLAND, ME 04102 BOOK 13795, PAGE 93

THIS PLAN IS FOR REVIEW PURPOSES ONLY AND IS NOT INTENDED FOR CONSTRUCTION OR RECORDING

Revision:	By:	Date:	Change:
3	SMA	9/7/18	SUBMITTED FOR FINAL SITE PLAN/SUBDIVISION REVIEW
2	SMA	5/11/18	SUBMITTED FOR PRELIMINARY SITE PLAN/SUBDIVISION REVIEW
1	SMA	5/4/18	SUBMITTED FOR MDEP TIER 1 REVIEW

PROJECT NUMBER: 41041 | ACAD FILE: 41041–COVER.DWG | SCALE: 1" = 40' | DATE: MAY 1, 2018

DRAWING STATUS
- [x] SITE PLAN REVIEW
- [ ] DEP REVIEW
- [ ] PLANNING BOARD
- [ ] SKETCH PLAN
- [ ] FOR CONSTRUCTION

9-7-18

Drawing Name:
COVER/INDEX/VICINITY PLAN

Project Name:
PROPOSED CAPISIC MEADOWS SUBDIVISION
130 BANCROFT STREET, PORTLAND, MAINE 04102

Owner/Applicant:
WB GROUP, INC
130 BANCROFT STREET, PORTLAND, MAINE 04102

STATE OF MAINE ANTHONY P. PANCIOCCO JR. No. 10941 LICENSED PROFESSIONAL ENGINEER
9-7-18

SURVEYING • ENGINEERING • LAND PLANNING
Northeast Civil Solutions
INCORPORATED
381 PAYNE ROAD, SCARBOROUGH, MAINE 04074
tel 207.883.1000 fax 207.883.1001 e–mail / website info@northeastcivilsolutions.com www.northeastcivilsolutions.com

0 40' 80' 160'

SHEET 1 OF 15

E:\LAND PROJECT\41000\41041–WAGNER–PORTLAND\PLANSET\41041–COVER.DWG

VICINITY MAP
N.T.S.

LEGEND

- #5 REBAR WITH PLASTIC CAP SET ON FEBRUARY 23, 2017
- FOUND IRON (SIZE & TYPE AS NOTED)
- UTILITY POLE (NUMBER AS NOTED)
- GUY WIRE ANCHOR
- SEWER MANHOLE
- FOUND DECIDUOUS TREE (SIZE & TYPE AS NOTED)
- FOUND CONIFEROUS TREE (SIZE & TYPE AS NOTED)
- TREE LINE (APPROXIMATE)
- BOUNDARY LINE
- EASEMENT LINE
- EDGE OF PAVEMENT
- RIGHT-OF-WAY LINE
- ABUTTER LINE
- BUILDING SETBACK
- OHU — OVERHEAD UTILITY
- N/F — NOW OR FORMERLY OWNED BY
- 1234/567 — DEED BOOK AND PAGE (CCRD)
- 12-34 — TAX MAP-LOT
- (123.45') — PARENTHESIS DENOTE RECORD DATA FROM DEEDS
- 22 — LOT NUMBERS FROM REFERENCED PLANS

NOTES

1. RECORD OWNERS OF THE PARCELS SURVEYED ARE DESCRIBED IN THE FOLLOWING DEEDS RECORDED IN THE CUMBERLAND COUNTY REGISTRY OF DEEDS:
   a. FROM EDWARD C. BROOKS & ROSE MARIE BROOKS TO KARI A. DOIRON & KENNETH J. DOIRON, DATED MARCH 30, 2012 AND RECORDED IN DEED BOOK 29467, PAGE 255 (PARCEL 193-E-039).
   b. FROM DIANE E. HERRICK TO PAUL WAGNER, DATED MARCH 23, 2010 AND RECORDED IN DEED BOOK 27668, PAGE 230 (PARCEL 193-E-026 & 040).
   c. FROM THE ESTATE OF STUART HERRICK, JR. TO JOSHUA WAGNER, DATED AUGUST 23, 2010 AND RECORDED IN DEED BOOK 28027, PAGE 268 (PARCEL 193-E-019).
2. THE PARCELS SURVEYED ARE IDENTIFIED ON THE CITY/TOWN OF PORTLAND TAX ASSESSOR'S MAP 193, BLOCK E, PARCELS 19, 26, 39 & 40.
3. THE BEARINGS SHOWN ON THIS PLAN ARE BASED ON MAINE STATE COORDINATE SYSTEM, WEST ZONE, 1801, GRID NORTH.
4. REFERENCE IS MADE TO THE FOLLOWING PLANS:
   a. "PLAN OF PROPERTY, 130 BANCROFT STREET, PORTLAND, MAINE", BY TITCOMB ASSOCIATES, DATED 8/30/2008, RECORDED IN PLAN BOOK 210, PAGE 228.
   b. "PLAN OF PROPERTY, 130 BANCROFT STREET, PORTLAND, MAINE", BY TITCOMB ASSOCIATES, DATED 8/13/2008, RECORDED IN PLAN BOOK 208, PAGE 370.
   c. "PLAN OF EMERSON WOODS, PORTLAND, MAINE", BY ROBERT P. TITCOMB, DATED 4/05/1973, RECORDED IN PLAN BOOK 94, PAGE 19.
   d. "PLAN OF EMERSON WOODS, PORTLAND, MAINE", BY ROBERT P. TITCOMB, DATED 12/20/1972, RECORDED IN PLAN BOOK 93, PAGE 42.
   e. "PLAN OF PROPERTY IN PORTLAND, MAINE MADE FOR CHARLOTTE L.F. CHENEY", BY H.I. & E.C. JORDAN, DATED 10/05/1979, RECORDED IN PLAN BOOK 125, PAGE 8,
   f. "1ST AMENDED SUBDIVISION PLAN OF REDLON PARK SUBDIVISION", BY SEBAGO TECHNICS, DATED 4/11/2016, RECORDED IN PLAN BOOK 216, PAGE 139.
   g. "PLANNED RESIDENTIAL UNIT DEVELOPMENT PLAN AND SUBDIVISION PLAN, REDLON PARK, REDLON ROAD, PORTLAND, MAINE" BY PINKHAM & GREER, DATED 2/27/1997, RECORDED IN PLAN BOOK 197, PAGE 493.
   h. "RIGHT-OF-WAY MAP, STATE HIGHWAY NO. 17, FEDERAL AID PROJECT NO. M-0614(2)", BY STATE OF MAINE DEPARTMENT OF TRANSPORTATION, DATED 4/1988, D.O.T. FILE NO. 3-364.
   j. MULTIPLE STREET LINE RECORDS PROVIDED BY THE CITY OF PORTLAND PUBLIC WORKS.
   k. PLAN OF BRIGHTON, PORTLAND, MAINE MADE FOR GEORGE T. EDWARDS, BY CLIFFORD C. LEGROW, DATED AUGUST, 1902, RECORDED IN PLAN BOOK 11, PAGE 109.
5. THE WIDTH OF BANCROFT STREET IS 50' BASED ON CITY OF PORTLAND STREET LINE RECORDS. THE LAYOUT OF THE RIGHT-OF-WAY LIMITS IS BASED ON SAID STREET LINE SHEETS AND MONUMENTATION FOUND.
6. THE PARCEL SURVEYED IS LOCATED IN THE R-3 ZONE/DISTRICT. PORTIONS OF BULK & SPACE REQUIREMENTS ARE AS FOLLOWS:
   MINIMUM LOT AREA = 6,500 S.F.
   MINIMUM FRONTAGE = 50'
   SETBACKS:
   FRONT = 25'
   SIDE = 8' MINIMUM
   1 & 1-1/2 STORY = 8'
   2 STORY = 14'
   3 STORY = 16'
   REAR = 25'
7. OTHER MUNICIPAL AND STATE OVERLAY ZONES MAY EXIST AND APPLY. BEFORE PROCEEDING ON ANY PROJECT WE RECOMMEND VERIFYING CURRENT ZONE AND ALL APPLICABLE SETBACKS AND RESTRICTIONS WITH THE APPROPRIATE AGENCIES.
8. ELEVATIONS AND CONTOURS ARE BASED ON CITY OF PORTLAND DATUM CALCULATED BY RTK (NAVD 1988 DATUM) AND ADDING 0.8' (DIFFERENCE BETWEEN NAVD 1988 AND NGVD 1929 IN PORTLAND) TO GET TO CITY DATUM. SEE PLAN FOR TBM DESCRIPTION.
9. THE UTILITIES SHOWN ON THIS PLAN WERE FROM FIELD OBSERVATION ONLY. THERE MAY BE OTHER UTILITIES EXISTING THAT ARE NOT SHOWN. CONTACT DIG-SAFE (888)DIG-SAFE PRIOR TO ANY EXCAVATION WORK.
10. WETLANDS SHOWN WERE DELINEATED BY LONGVIEW PARTNERS, LLC, JANUARY, 2017 AND FIELD LOCATED BY NCS. MAINE DEPARTMENT OF ENVIRONMENTAL PROTECTION PROVIDED A FIELD DETERMINATION THAT NO STREAMS EXIST ON THE SITE.

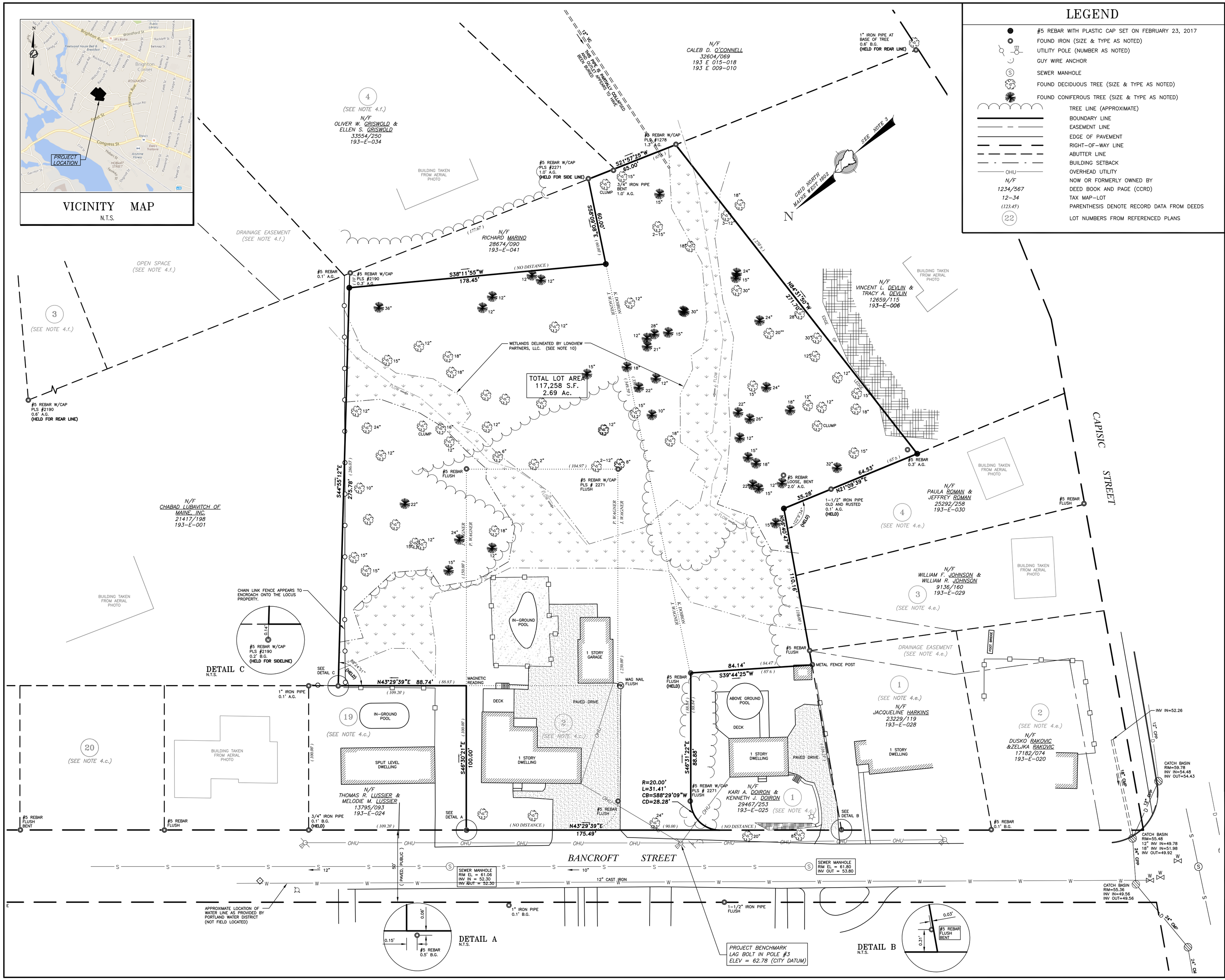

Revision:	By:	Date:	Change:
3	JAP	9/31/18	ADDED TREES
2	JAP	2/23/17	REVISE TO REMOVE 193-E-025 FROM PROJECT
1	MAC	2/23/17	ADDED SET PINS

PROJECT: 41041	DRAWING NAME: 41041.dwg		
ISSUED: FEBRUARY 10, 2017	SCALE: 1"=30'	FB # 420	DRAWN BY: JAP
FIELDED BY: JAP / MAC	FIELD DATE: 1/10/2017		CHECKED BY: TFM

Drawing Name and Location:

BOUNDARY & TOPOGRAPHIC SURVEY

130 & 144 BANCROFT STREET, PORTLAND, MAINE

Owners:

JOSHUA WAGNER (193-E-019)
130 BANCROFT STREET, PORTLAND, MAINE 04102

PAUL WAGNER (193-E-026 & 040)
68 WOLCOTT STREET, PORTLAND, MAINE 04102

KARI DOIRON & KENNETH J. DOIRON (193-E-039)
144 BANCROFT STREET, PORTLAND, MAINE 04102

Prepared For:

JOSH WAGNER

SURVEYING • ENGINEERING • LAND PLANNING
Northeast Civil Solutions
INCORPORATED
381 PAYNE ROAD, SCARBOROUGH, MAINE 04074
tel 207.883.1000 800.882.2227
fax 207.883.1001
e-mail / website info@northeastcivilsolutions.com www.northeastcivilsolutions.com

0 30' 60' 120'

STAMP AND SIGNATURE

TROY F. McDONALD
MAINE PROFESSIONAL LAND SURVEYOR No. 2080

9/01/2018
DATE

STATE OF MAINE TROY F. McDONALD #2080 PROFESSIONAL LAND SURVEYOR

E:\Land Projects\K1000\K1041-Wagner-Portland\dwg\K0041.dwg

VICINITY MAP
N.T.S.

SUBDIVISION NOTES

S-1. DEVELOPER:

S-2. SURVEYING / ENGINEERING:
NORTHEAST CIVIL SOLUTIONS, INC.
381 PAYNE ROAD
SCARBOROUGH, MAINE 04074

S-3. WETLAND DELINEATION:
LONGVIEW PARTNERS, LLC
6 SECOND STREET
BUXTON, MAINE 04093

S-4. ELEVATIONS AND CONTOURS ARE BASED ON CITY OF PORTLAND DATUM. SEE PLAN FOR TBM DESCRIPTION.

ZONING ASSESSMENT

THE SUBJECT PARCEL IS LOCATED IN R-3 ZONE. PORTIONS OF BULK & SPACE REQUIREMENTS ARE AS FOLLOWS:
MINIMUM LOT AREA = 6,500 S.F.
MINIMUM LOT FRONTAGE = 50'
FRONT SETBACK = 25'
REAR SETBACK = 25'
SIDE SETBACK = 8' MINIMUM
1 & 1-1/2 STORY = 8'
2 STORY = 14'
3 STORY = 16'

LOT	MIN. LOT AREA	PROPOSED LOT AREA	MIN. LOT FRONTAGE	PROPOSED LOT FRONTAGE
A	6,500 SF	11,417 SF	50'	85.49'
1	6,500 SF	13,575 SF	50'	65.11'
2	6,500 SF	11,693 SF	50'	68.57'
3	6,500 SF	10,266 SF	50'	72.46'
4	6,500 SF	8,787 SF	50'	82.20'
5	6,500 SF	10,044 SF	50'	65.62'
6	6,500 SF	11,280 SF	50'	101.48'
7	6,500 SF	10,757 SF	50'	90.00'

WETLAND IMPACT:
IMPACT AREA A = 242 SF
IMPACT AREA B = 9,408 SF
IMPACT AREA C = 1,018 SF
IMPACT AREA D = 73 SF
TOTAL IMPACT = 10,741 SF

	EXISTING	PROPOSED	NET CHANGE
WETLAND	21,796 SF	11,055 SF	10,741 SF
IMPERVIOUS	12,458 SF	41,120 SF	28,663 SF
PERCENT OF EXISTING WETLAND FILLED = 49.3%			

NOTES

1. ALL NEW HOMES IN THE CAPISIC MEADOWS SUBDIVISION WILL REQUIRE SPRINKLER SYSTEMS.
2. DUE TO A HIGH GROUNDWATER TABLE, NEW HOMES SHOULD EITHER BE CONSTRUCTED WITH SLAB ON GRADE FOUNDATIONS OR HAVE PROVISIONS FOR SUMP PUMPS.
3. ALL STORMWATER INFRASTRUCTURE, LOCATED OUTSIDE OF THE ROADWAY, RIGHT-OF-WAY SHALL BE THE RESPONSIBILITY OF THE CAPISIC MEADOWS HOMEOWNERS ASSOCIATION.

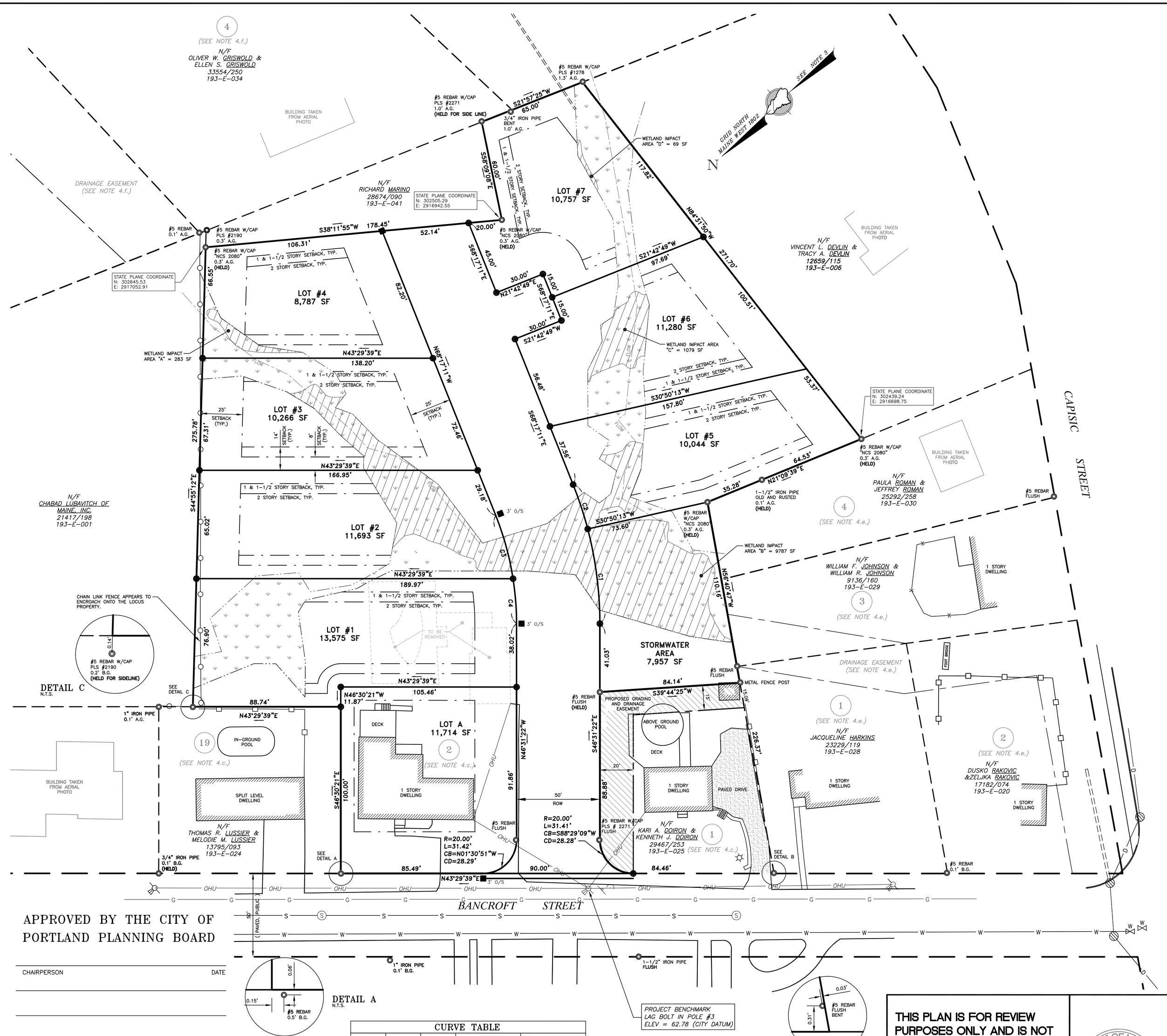

APPROVED BY THE CITY OF PORTLAND PLANNING BOARD

CHAIRPERSON DATE

CURVE	LENGTH	RADIUS	CHORD LENGTH	CHORD BEARING
C1	57.40'	225.00'	57.25'	S53°49'52"E
C2	28.06'	225.00'	28.05'	S64°42'47"E
C3	39.39'	175.00'	39.30'	N61°50'20"W
C4	27.09'	175.00'	27.06'	N50°57'25"W

THIS PLAN IS FOR REVIEW PURPOSES ONLY AND IS NOT INTENDED FOR CONSTRUCTION OR RECORDING

STATE OF MAINE TROY F. McDONALD #2080 PROFESSIONAL LAND SURVEYOR 9/07/18

LEGEND

- #5 REBAR WITH PLASTIC CAP (PROPOSED)
- SET GRANITE MONUMENT WITH PLASTIC CAP (PROPOSED) *(PROPOSED MONUMENTATION SHOWN ON THIS SURVEY PLAT MAY OR MAY NOT BE SET BY NCS, INC. AND IF SO WILL BE DONE UPON CLIENT AUTHORIZATION)*
- FOUND IRON (SIZE & TYPE AS NOTED)
- UTILITY POLE (NUMBER AS NOTED)
- GUY WIRE ANCHOR
- TREE LINE (APPROXIMATE)
- BOUNDARY LINE
- EASEMENT LINE
- EDGE OF PAVEMENT
- RIGHT-OF-WAY LINE
- ABUTTER LINE
- BUILDING SETBACK
- OHU — OVERHEAD UTILITY
- *N/F* — NOW OR FORMERLY OWNED BY
- *1234/567* — DEED BOOK AND PAGE (CCRD)
- *12-34* — TAX MAP-LOT
- PARENTHESIS DENOTE RECORD DATA

BOUNDARY NOTES

1. RECORD OWNERS OF THE PARCELS SURVEYED ARE DESCRIBED IN THE FOLLOWING DEEDS RECORDED IN THE CUMBERLAND COUNTY REGISTRY OF DEEDS:
   a. FROM EDWARD C. BROOKS & ROSE MARIE BROOKS TO KARI A. DOIRON & KENNETH J. DOIRON, DATED MARCH 30, 2012 AND RECORDED IN DEED BOOK 29467, PAGE 255 (PARCEL 193-E-039).
   b. FROM DIANE E. HERRICK TO PAUL WAGNER, DATED MARCH 23, 2010 AND RECORDED IN DEED BOOK 27668, PAGE 230 (PARCEL 193-E-026 & 040).
   c. FROM THE ESTATE OF STUART HERRICK, JR. TO JOSHUA WAGNER, DATED AUGUST 23, 2010 AND RECORDED IN DEED BOOK 28027, PAGE 268 (PARCEL 193-E-019).
2. THE PARCELS SURVEYED ARE IDENTIFIED ON THE CITY/TOWN OF PORTLAND TAX ASSESSOR'S MAP 193, BLOCK E, PARCELS 19, 26, 39 & 40.
3. THE BEARINGS SHOWN ON THIS PLAN ARE BASED ON MAINE STATE COORDINATE SYSTEM, WEST ZONE, 1801, GRID NORTH.
4. REFERENCE IS MADE TO THE FOLLOWING PLANS:
   a. "PLAN OF PROPERTY, 130 BANCROFT STREET, PORTLAND, MAINE", BY TITCOMB ASSOCIATES, DATED 8/30/2008, RECORDED IN PLAN BOOK 210, PAGE 228.
   b. "PLAN OF PROPERTY, 130 BANCROFT STREET, PORTLAND, MAINE", BY TITCOMB ASSOCIATES, DATED 8/13/2008, RECORDED IN PLAN BOOK 208, PAGE 370.
   c. "PLAN OF EMERSON WOODS, PORTLAND, MAINE", BY ROBERT P. TITCOMB, DATED 4/05/1973, RECORDED IN PLAN BOOK 94, PAGE 19.
   d. "PLAN OF EMERSON WOODS, PORTLAND, MAINE", BY ROBERT P. TITCOMB, DATED 12/20/1972, RECORDED IN PLAN BOOK 93, PAGE 42.
   e. "PLAN OF PROPERTY IN PORTLAND, MAINE MADE FOR CHARLOTTE L.F. CHENEY", BY H.I. & E.C. JORDAN, DATED 10/05/1979, RECORDED IN PLAN BOOK 125, PAGE 8,
   f. "1ST AMENDED SUBDIVISION PLAN OF REDLON PARK SUBDIVISION", BY SEBAGO TECHNICS, DATED 4/11/2016, RECORDED IN PLAN BOOK 216, PAGE 139.
   g. "PLANNED RESIDENTIAL UNIT DEVELOPMENT PLAN AND SUBDIVISION PLAN, REDLON PARK, REDLON ROAD, PORTLAND, MAINE" BY PINKHAM & GREER, DATED 2/27/1997, RECORDED IN PLAN BOOK 197, PAGE 493.
   h. "RIGHT-OF-WAY MAP, STATE HIGHWAY NO. 17, FEDERAL AID PROJECT NO. M-0614(2)", BY STATE OF MAINE DEPARTMENT OF TRANSPORTATION, DATED 4/1988, D.O.T. FILE NO. 3-364.
   j. MULTIPLE STREET LINE RECORDS PROVIDED BY THE CITY OF PORTLAND PUBLIC WORKS.
   k. PLAN OF BRIGHTON, PORTLAND, MAINE MADE FOR GEORGE T. EDWARDS, BY CLIFFORD C. LEGROW, DATED AUGUST, 1902, RECORDED IN PLAN BOOK 11, PAGE 109.
5. THE WIDTH OF BANCROFT STREET IS 50' BASED ON CITY OF PORTLAND STREET LINE RECORDS. THE LAYOUT OF THE RIGHT-OF-WAY LIMITS IS BASED ON SAID STREET LINE SHEETS AND MONUMENTATION FOUND.
6. ELEVATIONS AND CONTOURS ARE BASED ON CITY OF PORTLAND DATUM CALCULATED BY RTK (NAVD 1988 DATUM) AND ADDING 0.8' (DIFFERENCE BETWEEN NAVD 1988 AND NGVD 1929 IN PORTLAND) TO GET TO CITY DATUM. SEE PLAN FOR TBM DESCRIPTION.
7. THE UTILITIES SHOWN ON THIS PLAN WERE FROM FIELD OBSERVATION ONLY. THERE MAY BE OTHER UTILITIES EXISTING THAT ARE NOT SHOWN. CONTACT DIG-SAFE (888)DIG-SAFE PRIOR TO ANY EXCAVATION WORK.
8. WETLANDS SHOWN WERE DELINEATED BY LONGVIEW PARTNERS, LLC, JANUARY, 2017 AND FIELD LOCATED BY NCS. MAINE DEPARTMENT OF ENVIRONMENTAL PROTECTION PROVIDED A FIELD DETERMINATION THAT NO STREAMS EXIST ON THE SITE.

Revision:	By:	Date:	Change:
3	SMA	9/7/18	SUBMITTED FOR FINAL SITE PLAN/SUBDIVISION REVIEW

PROJECT: 41041	DRAWING NAME: 41041 Subdivision.dwg	
ISSUED: MAY 1, 2018	SCALE: 1"=30'	FB # 420 / DRAWN BY: JAP
FIELDED BY: JAP / MAC	FIELD DATE: 1/10/2017	CHECKED BY: TFM

Drawing Name and Location:
SUBDIVISION PLAN
130 & 144 BANCROFT STREET, PORTLAND, MAINE

Owners:
JOSHUA WAGNER (193-E-019)
130 BANCROFT STREET, PORTLAND, MAINE 04102
PAUL WAGNER (193-E-026 & 040)
68 WOLCOTT STREET, PORTLAND, MAINE 04102
KARI DOIRON & KENNETH J. DOIRON (193-E-039)
144 BANCROFT STREET, PORTLAND, MAINE 04102

Prepared For:
JOSH WAGNER

SURVEYING • ENGINEERING • LAND PLANNING
Northeast Civil Solutions
INCORPORATED
381 PAYNE ROAD, SCARBOROUGH, MAINE 04074
tel 207.883.1000 800.882.2227
fax 207.883.1001
e-mail / website info@northeastcivilsolutions.com www.northeastcivilsolutions.com

0 30' 60' 120'

E:\Land Projects\41000\41041-Wagner-Portland\dwg\41041 Subdivision.dwg

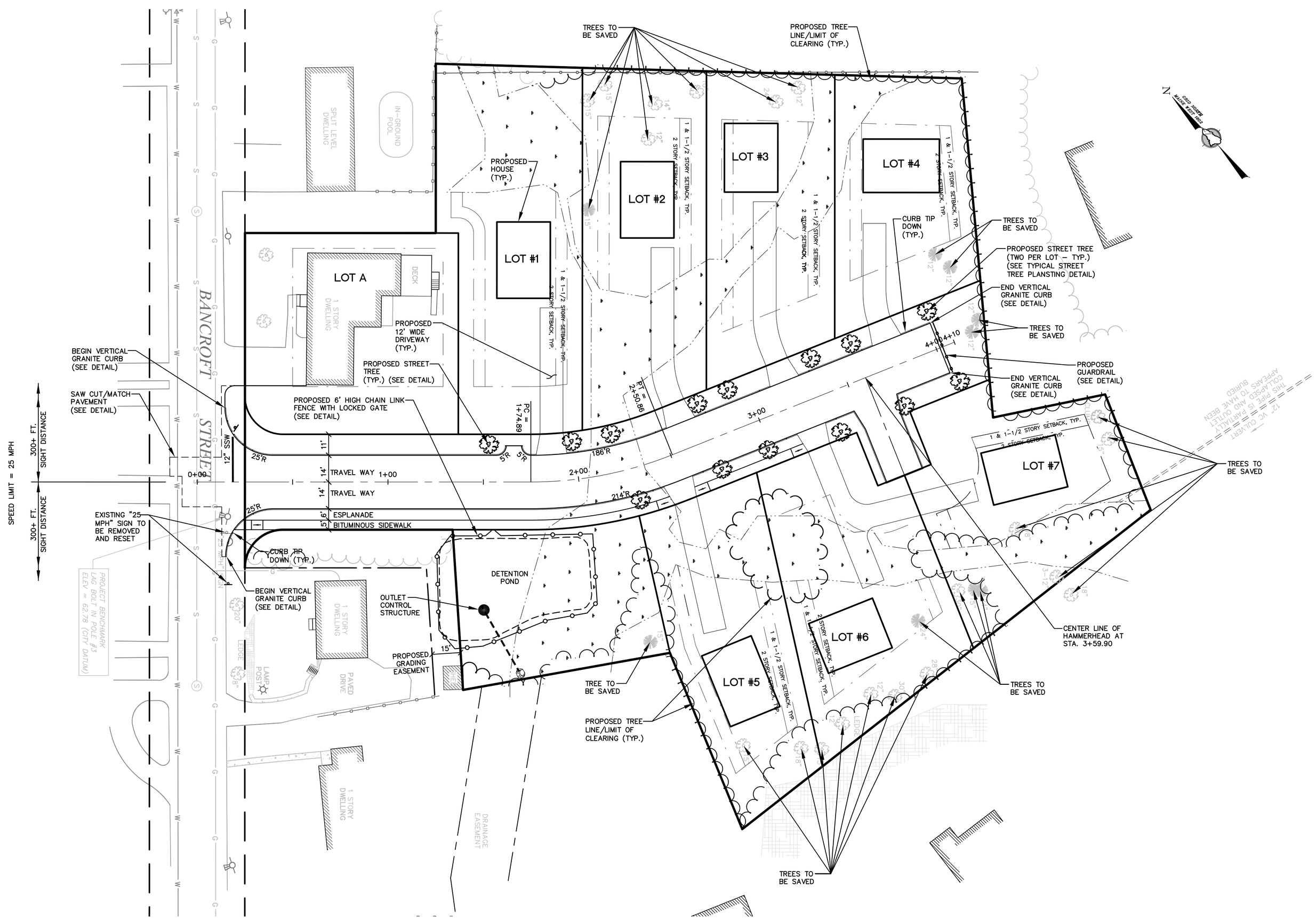

LEGEND

- BOUNDARY LINE
- EDGE OF PAVEMENT
- RIGHT-OF-WAY LINE
- ABUTTER
- EXISITNG EASEMENT
- BUILDING SETBACK
- EXISTING UTILITY POLE
- EXISTING OVERHEAD UTILITY
- EXISTING HYDRANT
- EXISTING HYDRANT
- EXISTING WATER LINE
- EXISTING SEWER MANHOLE
- EXISTING WATER LINE
- EXISTING TREE (TO BE SAVED)
- EXISTING TREE LINE
- WETLAND
- PROPOSED TREE
- PROPOSED TREE LINE

THIS PLAN IS FOR REVIEW PURPOSES ONLY AND IS NOT INTENDED FOR CONSTRUCTION OR RECORDING

Revision:	By:	Date:	Change:
3	SMA	9/7/18	SUBMITTED FOR FINAL SITE PLAN/SUBDIVISION REVIEW

PROJECT NUMBER: 41041 | ACAD FILE: 41041-SITE.DWG | SCALE: 1" = 30' | DATE: MAY 1, 2018

Drawing Name:
SITE LAYOUT, LANDSCAPE & TREE SAVE PLAN

Project Name:
PROPOSED CAPISIC MEADOWS SUBDIVISION
130 BANCROFT STREET, PORTLAND, MAINE 04102

Owner/Applicant:
WB GROUP, INC
130 BANCROFT STREET, PORTLAND, MAINE 04102

STATE OF MAINE — ANTHONY P. PANCIOCCO JR. — No. 10941 — LICENSED PROFESSIONAL ENGINEER
9-7-18

SHEET 15 OF 15

SURVEYING • ENGINEERING • LAND PLANNING
Northeast Civil Solutions
INCORPORATED
381 PAYNE ROAD, SCARBOROUGH, MAINE 04074
tel 207.883.1000 fax 207.883.1001 e-mail / website info@northeastcivilsolutions.com www.northeastcivilsolutions.com

0 30' 60' 120'

E:\LAND PROJECTS\41000\41041-WAGNER-PORTLAND\PLANSET\41041-SITE.DWG

LEGEND

- BOUNDARY LINE
- EDGE OF PAVEMENT
- RIGHT-OF-WAY LINE
- WETLAND
- EXISTING TREE LINE
- PROPOSED TREE
- PROPOSED TREE LINE
- INDIVIDUAL TREE SAVE
- TREE SAVE AREAS
- PROPOSED TREES

THIS PLAN IS FOR REVIEW PURPOSES ONLY AND IS NOT INTENDED FOR CONSTRUCTION OR RECORDING

Revision:	By:	Date:	Change:

PROJECT NUMBER: 41041 | ACAD FILE: 41041-LANDSCAPE.DWG | SCALE: 1" = 30' | DATE: OCTOBER 1, 2018

Drawing Name:
LANDSCAPE PLAN

Project Name:
PROPOSED CAPISIC MEADOWS SUBDIVISION
130 BANCROFT STREET, PORTLAND, MAINE 04102

Owner/Applicant:
WB GROUP, INC
130 BANCROFT STREET, PORTLAND, MAINE 04102

SURVEYING • ENGINEERING • LAND PLANNING
Northeast Civil Solutions
INCORPORATED
381 PAYNE ROAD, SCARBOROUGH, MAINE 04074
tel 207.883.1000 fax 207.883.1001 e-mail / website info@northeastcivilsolutions.com www.northeastcivilsolutions.com

0 30' 60' 120'

SHEET 1 OF 1

E:\LAND PROJECT\41000\41041-WAGNER-PORTLAND\PLANSET\41041-LANDSCAPE.DWG

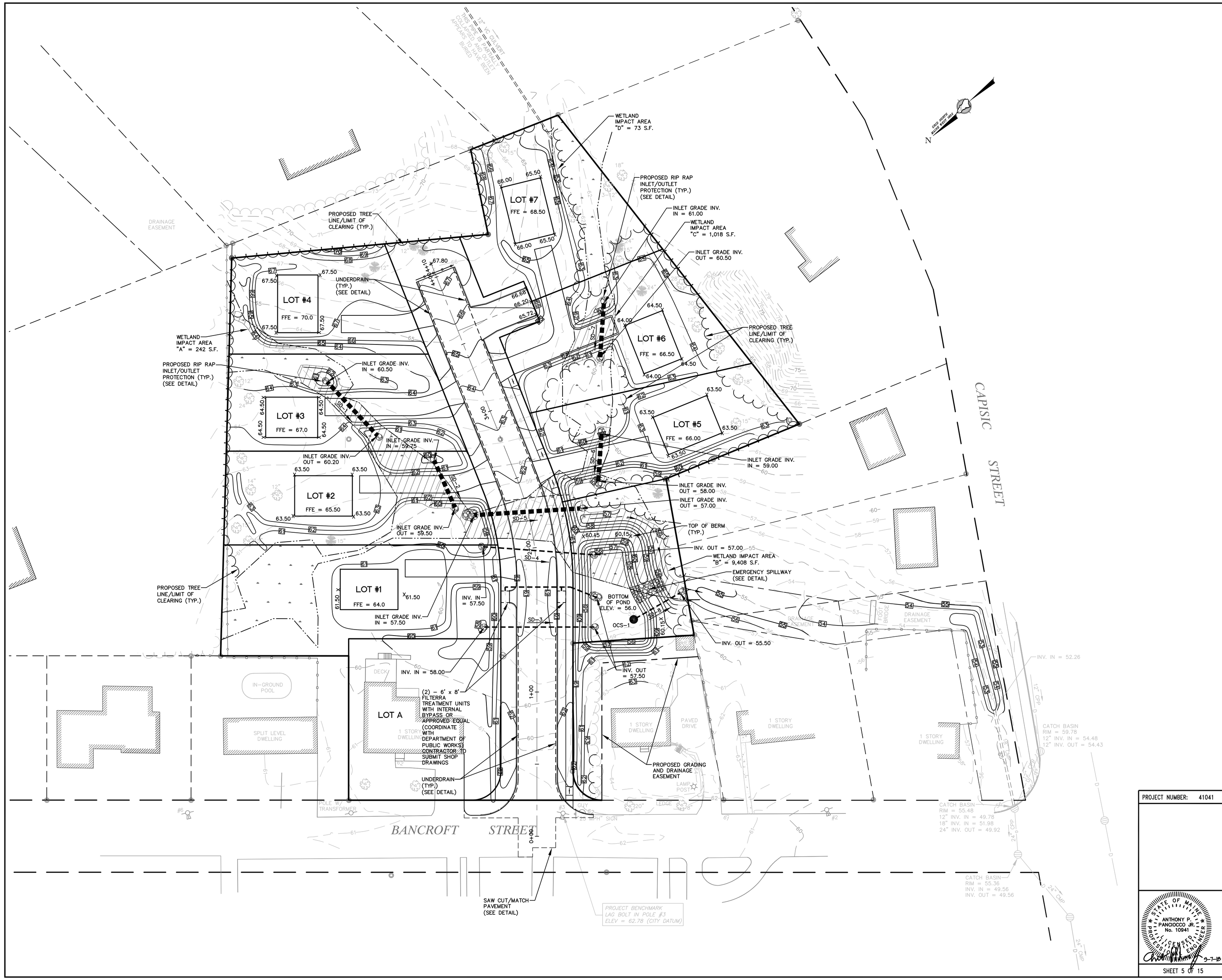

LEGEND

- BOUNDARY LINE
- EDGE OF PAVEMENT
- RIGHT-OF-WAY LINE
- ABUTTER
- EXISITNG EASEMENT
- BUILDING SETBACK
- EXISTING UTILITY POLE
- EXISTING OVERHEAD UTILITY
- EXISTING HYDRANT
- EXISTING HYDRANT
- EXISTING WATER LINE
- EXISTING SEWER MANHOLE
- EXISTING WATER LINE
- EXISTING TREE
- EXISTING TREE LINE
- WETLAND
- EXISTING CONTOUR
- PROPOSED TREE LINE
- PROPOSED DRAIN LINE
- PROPOSED OUTLET CONTROL STRUCTURE
- PROPOSED GRADING & DRAINAGE EASEMENT
- WETLAND IMPACT
- PROPOSED CONTOUR

NOTES

1. WETLAND IMPACT:

IMPACT AREA A =	242 SF
IMPACT AREA B =	9,408 SF
IMPACT AREA C =	1,018 SF
IMPACT AREA D =	73 SF
TOTAL IMPACT =	10,741 SF

2. ALL PROPOSED HOUSES THAT HAVE BASEMENTS SHOULD INCLUDE PROVISIONS FOR A SUMP PUMP, AND SUMP PUMP DISCHARGE WITH BACK-FLOW PREVENTION.

PIPE SCHEDULE

PIPE	PIPE DIAMETER	PIPE LENGTH	PIPE SLOPE (FT/FT)	TYPE
SD-1	36"	51'	0.0059	ADS N-12 HP TRIPLE WALL PIPE
SD-2	36"	45'	0.0056	ADS N-12 HP TRIPLE WALL PIPE
SD-3	15"	80'	0.0063	ADS N-12 HP TRIPLE WALL PIPE
SD-4	18"	85'	0.006	ADS N-12 HP TRIPLE WALL PIPE
SD-5	36"	72'	0.007	ADS N-12 HP TRIPLE WALL PIPE
SD-6	36"	32'	0.031	ADS N-12 HP TRIPLE WALL PIPE
SD-7	36"	38'	0.013	ADS N-12 HP TRIPLE WALL PIPE
SD-8	15"	35'	0.014	ADS N-12 HP TRIPLE WALL PIPE

THIS PLAN IS FOR REVIEW PURPOSES ONLY AND IS NOT INTENDED FOR CONSTRUCTION OR RECORDING

Revision:	By:	Date:	Change:
3	SMA	9/7/18	SUBMITTED FOR FINAL SITE PLAN/SUBDIVISION REVIEW
2	SMA	5/11/18	SUBMITTED FOR PRELIMINARY SITE PLAN/SUBDIVISION REVIEW
1	SMA	5/4/18	SUBMITTED FOR MDEP TIER 1 REVIEW

PROJECT NUMBER: 41041 | ACAD FILE: 41041-GRADING.DWG | SCALE: 1" = 30' | DATE: MAY 1, 2018

Drawing Name:
GRADING & DRAINAGE PLAN

Project Name:
PROPOSED CAPISIC MEADOWS SUBDIVISION
130 BANCROFT STREET, PORTLAND, MAINE 04102

Owner/Applicant:
WB GROUP, INC
130 BANCROFT STREET, PORTLAND, MAINE 04102

STATE OF MAINE ANTHONY P. PANCOCCO JR. No. 10941 LICENSED PROFESSIONAL ENGINEER
9-7-18

SHEET 5 OF 15

SURVEYING • ENGINEERING • LAND PLANNING
Northeast Civil Solutions
INCORPORATED
381 PAYNE ROAD, SCARBOROUGH, MAINE 04074
tel 207.883.1000 fax 207.883.1001
e-mail / website info@northeastcivilsolutions.com www.northeastcivilsolutions.com

0 30' 60' 120'

E:\LAND PROJECTS\41000's\41041-WAGNER-PORTLAND\PLANSET\41041-GRADING.DWG

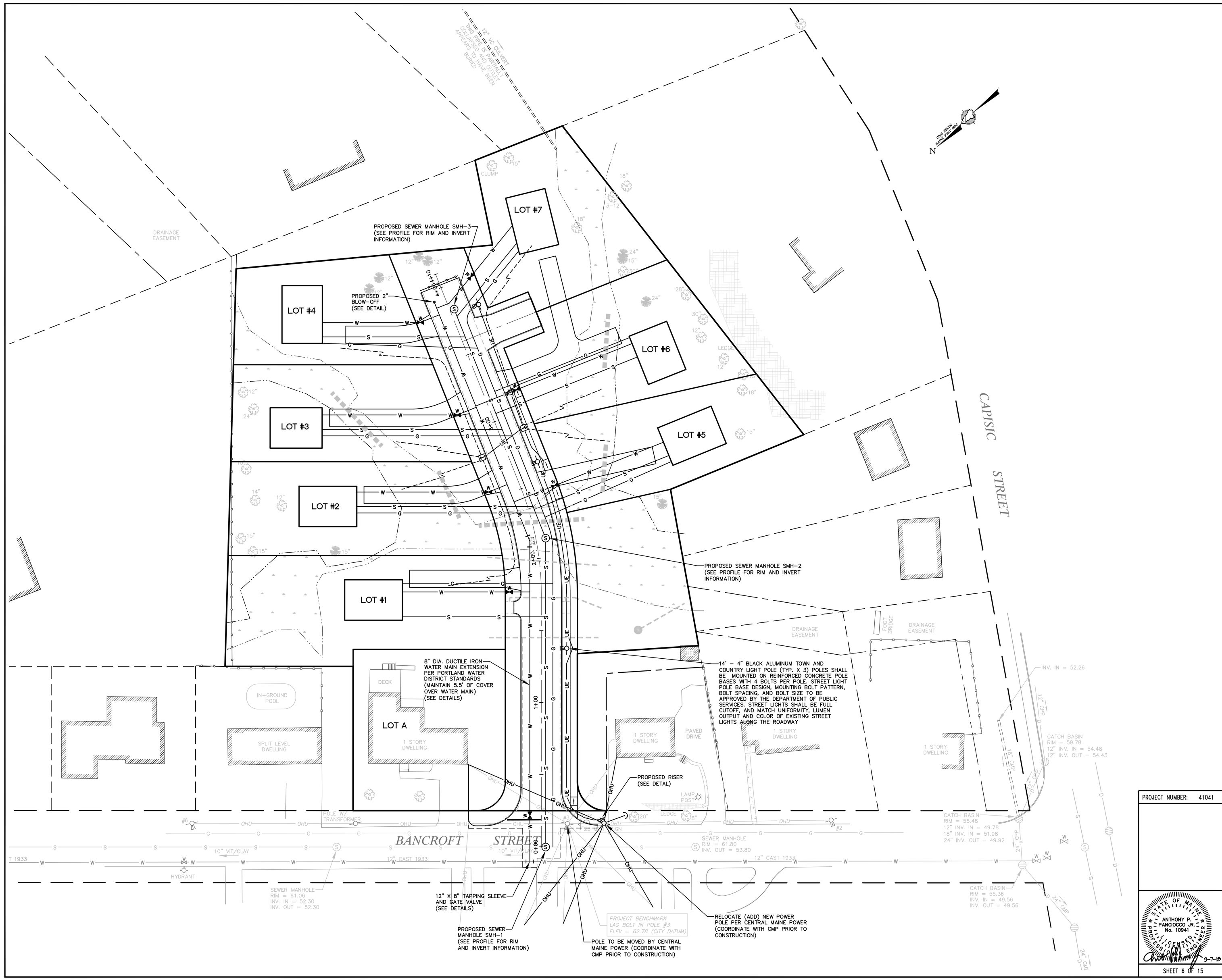

LEGEND

- BOUNDARY LINE
- EDGE OF PAVEMENT
- RIGHT-OF-WAY LINE
- ABUTTER
- EXISITNG EASEMENT
- BUILDING SETBACK
- EXISTING UTILITY POLE
- EXISTING OVERHEAD UTILITY
- EXISTING HYDRANT
- EXISTING HYDRANT
- EXISTING WATER LINE
- EXISTING SEWER MANHOLE
- EXISTING WATER LINE
- EXISTING TREE
- EXISTING TREE LINE
- WETLAND
- PROPOSED WATER LINE
- PROPOSED SEWER LINE
- PROPOSED DRAIN LINE
- PROPOSED OVERHEAD UTILITIES
- PROPOSED UNDERGROUND UTILITIES
- PROPOSED GAS LINE
- PROPOSED OUTLET CONTROL STRUCTURE

CONSTRUCTION NOTES

1. ALL EXISTING UTILITY LOCATIONS SHOWN ARE APPROXIMATE AND HAVE BEEN DETERMINED BY SURFACE EVIDENCE AND/OR PREVIOUSLY GENERATED PLANS. NO GUARANTEE IS MADE THAT ALL UTILITIES ARE SHOWN OR WILL BE FOUND IN LOCATIONS INDICATED. THIS INFORMATION IS PROVIDED FOR REFERENCE AND THE CONTRACTOR SHALL VERIFY LOCATION OF ALL UTILITIES AND POINTS OF CONNECTION IN THE FIELD. CONTRACTOR SHALL BE RESPONSIBLE FOR REPAIR AND RESTORATION OF ALL UTILITIES DISTURBED DURING CONSTRUCTION AT NO EXTRA EXPENSE TO THE OWNER.
2. CONTRACTOR SHALL VISIT THE SITE AND FAMILIARIZE HIM OR HERSELF WITH ALL CONDITIONS AFFECTING THE PROPOSED WORK AND SHALL MAKE PROVISIONS AS TO THE COST THEREOF. CONTRACTOR SHALL BE RESPONSIBLE FOR FAMILIARIZING HIM OR HERSELF WITH ALL CONTRACT DOCUMENTS, FIELD CONDITIONS AND DIMENSIONS AND CONFORMING THAT THE WORK MAY BE ACCOMPLISHED AS SHOWN PRIOR TO PROCEEDING WITH CONSTRUCTION. ANY DISCREPANCIES SHALL BE BROUGHT TO THE ATTENTION OF THE ENGINEER PRIOR TO THE COMMENCEMENT OF WORK.
3. CONTRACTOR SHALL NOTIFY ENGINEER OF ALL PRODUCTS OR ITEMS NOTED AS "EXISTING" WHICH ARE NOT FOUND IN THE FIELD.
4. ALL SUBSURFACE UTILITY LINES, SHOWN HEREON, ARE BASED SOLELY ON THE FIELD LOCATION OF VISIBLE STRUCTURES, SMH'S, CB'S, HYDRANTS, ETC. IN CONJUNCTION WITH DESIGN AND OR AS-BUILT PLANS SUPPLIED TO NORTHEAST CIVIL SOLUTIONS BY OTHERS. PRIOR TO ANY CONSTRUCTION, EXCAVATION, TEST BORINGS, DRILLING ETC. DIG SAFE MUST BE NOTIFIED AND A SITE IDENTIFICATION NUMBER, ALONG WITH A SAFE TO DIG DATE OBTAINED. THE SITE CONTRACTOR SHALL BE RESPONSIBLE FOR FIELD VERIFYING THE LOCATION, DEPTH AND MATERIAL OF ALL SUBSURFACE UTILITY LINES SHOWN HEREON, AND ON ANY AND ALL OTHERS LOCATED ON SITE WITHIN THE CONSTRUCTION AREA. CONTACT DIG-SAFE (888) DIG-SAFE PRIOR TO ANY EXCAVATION WORK.
5. COORDINATE ALL ELECTRICAL WORK WITH CENTRAL MAINE POWER (CMP) PRIOR TO CONSTRUCTION.
6. ALL WATER LINE WORK SHALL MEET PORTLAND WATER DISTRICT (PWD) STANDARDS. COORDINATE ALL WORK WITH THE DISTRICT PRIOR TO CONSTRUCTION.
7. ALL SEWER LINE WORK SHALL MEET CITY OF PORTLAND PUBLIC WORKS DEPARTMENT STANDARDS. COORDINATE ALL WORK WITH THE CITY PRIOR TO CONSTRUCTION.

THIS PLAN IS FOR REVIEW PURPOSES ONLY AND IS NOT INTENDED FOR CONSTRUCTION OR RECORDING

Revision:	By:	Date:	Change:
3	SMA	9/7/18	SUBMITTED FOR FINAL SITE PLAN/SUBDIVISION REVIEW
2	SMA	5/11/18	SUBMITTED FOR PRELIMINARY SITE PLAN/SUBDIVISION REVIEW
1	SMA	5/4/18	SUBMITTED FOR MDEP TIER 1 REVIEW

PROJECT NUMBER: 41041 | ACAD FILE: 41041-UTILITY.DWG | SCALE: 1" = 30' | DATE: MAY 1, 2018

Drawing Name:
UTILITY PLAN

Project Name:
PROPOSED CAPISIC MEADOWS SUBDIVISION
130 BANCROFT STREET, PORTLAND, MAINE 04102

Owner/Applicant:
WB GROUP, INC
130 BANCROFT STREET, PORTLAND, MAINE 04102

STATE OF MAINE — ANTHONY P. PANCIOCCO JR. No. 10941 — LICENSED PROFESSIONAL ENGINEER
9-7-18

SHEET 6 OF 15

SURVEYING • ENGINEERING • LAND PLANNING
Northeast Civil Solutions
INCORPORATED
381 PAYNE ROAD, SCARBOROUGH, MAINE 04074
tel 207.883.1000 fax 207.883.1001 e-mail / website info@northeastcivilsolutions.com www.northeastcivilsolutions.com

0 30' 60' 120'

E:\LAND PROJECTS\41000\41041-WAGNER-PORTLAND\PLANSET\41041-UTILITY.DWG

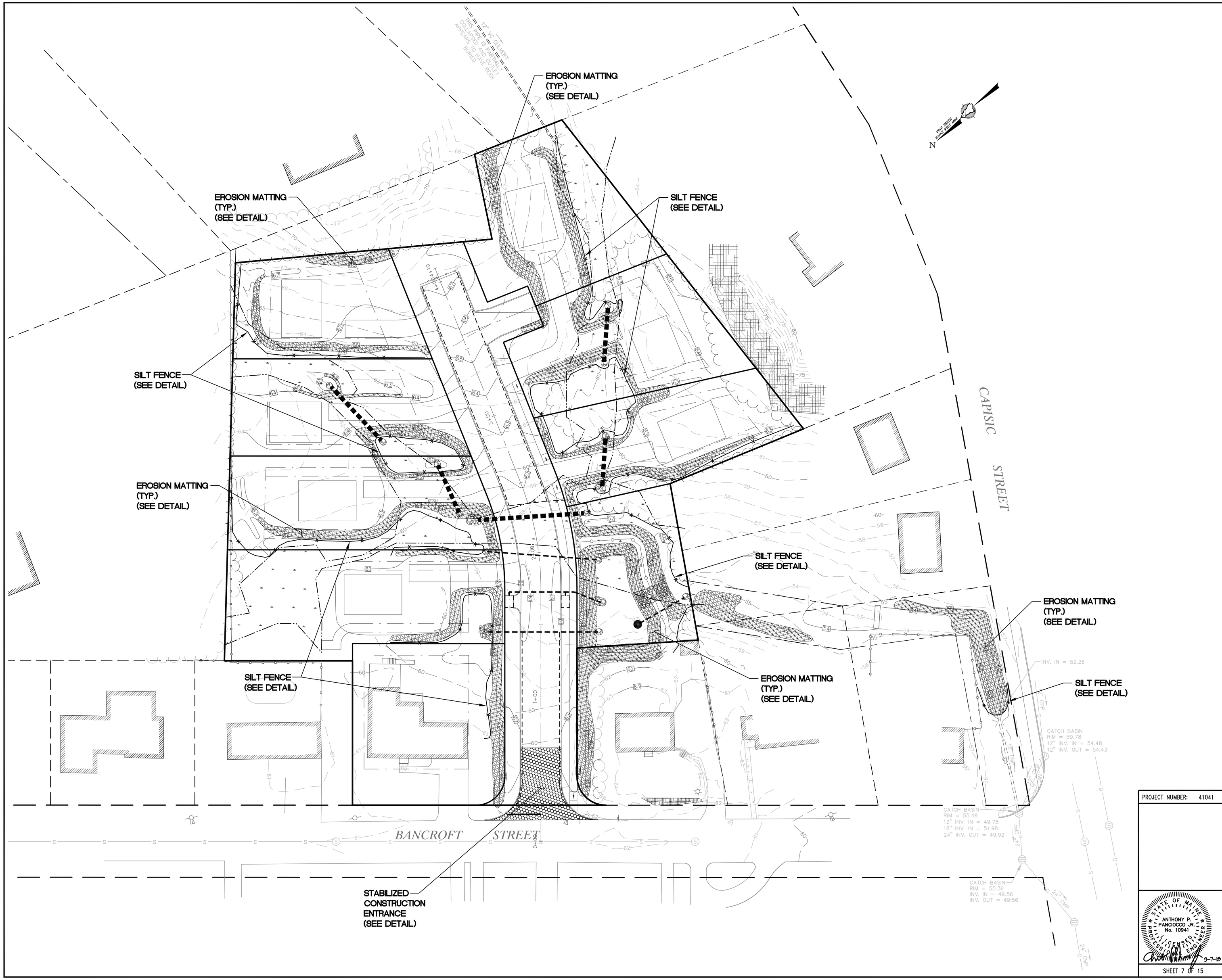

LEGEND

- MULCH BERM/EROSION CONTROL MIX OR SILT FENCE
- STABILIZED CONSTRUCTION ENTRANCE
- EROSION CONTROL MATTING

THIS PLAN IS FOR REVIEW PURPOSES ONLY AND IS NOT INTENDED FOR CONSTRUCTION OR RECORDING

Revision:	By:	Date:	Change:
3	SMA	9/7/18	SUBMITTED FOR FINAL SITE PLAN/SUBDIVISION REVIEW
2	SMA	5/11/18	SUBMITTED FOR PRELIMINARY SITE PLAN/SUBDIVISION REVIEW
1	SMA	5/4/18	SUBMITTED FOR MDEP TIER 1 REVIEW

PROJECT NUMBER: 41041 | ACAD FILE: 41041-EROSION.DWG | SCALE: 1" = 30' | DATE: MAY 1, 2018

Drawing Name:
EROSION & SEDIMENTATION CONTROL PLAN

Project Name:
PROPOSED CAPISIC MEADOWS SUBDIVISION
130 BANCROFT STREET, PORTLAND, MAINE 04102

Owner/Applicant:
WB GROUP, INC
130 BANCROFT STREET, PORTLAND, MAINE 04102

STATE OF MAINE
ANTHONY P. PANCIOCCO JR.
No. 10941
LICENSED PROFESSIONAL ENGINEER
9-7-18

SHEET 7 OF 15

SURVEYING • ENGINEERING • LAND PLANNING
Northeast Civil Solutions
INCORPORATED
381 PAYNE ROAD, SCARBOROUGH, MAINE 04074
tel 207.883.1000 fax 207.883.1001
e-mail / website info@northeastcivilsolutions.com www.northeastcivilsolutions.com

0 30' 60' 120'

E:\LAND PROJECT\41000\41041-WAGNER-PORTLAND PLANSET\41041-EROSION.DWG

EROSION AND SEDIMENTATION CONTROL PLAN NOTES

SEDIMENTATION AND EROSION FOR THIS PROJECT IS BASED UPON SOUND CONSERVATION PRACTICES, AND ADHERES TO THE STANDARDS DETAILED IN MAINE EROSION AND SEDIMENT CONTROL BEST MANAGEMENT PRACTICES (BMP) BY THE MAINE DEPARTMENT OF ENVIRONMENTAL PROTECTION, DATED OCTOBER 2016. THE CONTRACTOR SHALL MAKE HIMSELF FAMILIAR WITH THE AFOREMENTIONED PUBLICATION AND COMPLY WITH THE PRACTICES PRESENTED THEREIN.

A PERSON WHO CONDUCTS, OR CAUSES TO BE CONDUCTED, AN ACTIVITY THAT INVOLVES FILLING, DISPLACING OR EXPOSING SOIL OR OTHER EARTHEN MATERIALS SHALL TAKE MEASURES TO PREVENT UNREASONABLE EROSION OF SOIL OR SEDIMENT BEYOND THE PROJECT SITE OR INTO A PROTECTED NATURAL RESOURCE AS DEFINED IN 38 M.R.S. §480-B. EROSION CONTROL MEASURES MUST BE IN PLACE BEFORE THE ACTIVITY BEGINS. MEASURES MUST REMAIN IN PLACE AND FUNCTIONAL UNTIL THE SITE IS PERMANENTLY STABILIZED. ADEQUATE AND TIMELY TEMPORARY AND PERMANENT STABILIZATION MEASURES MUST BE TAKEN.

1 EROSION AND SEDIMENTATION CONTROL

1.1 POLLUTION PREVENTION. MINIMIZE DISTURBED AREAS AND PROTECT NATURAL DOWNGRADIENT BUFFER AREAS TO THE EXTENT PRACTICABLE. CONTROL STORMWATER VOLUME AND VELOCITY WITHIN THE SITE TO MINIMIZE SOIL EROSION. MINIMIZE THE DISTURBANCE OF STEEP SLOPES. CONTROL STORMWATER DISCHARGES, INCLUDING BOTH PEAK FLOW RATES AND VOLUME, TO MINIMIZE EROSION AT OUTLETS. THE DISCHARGE MAY NOT RESULT IN EROSION OF ANY OPEN DRAINAGE CHANNELS, SWALES, STREAM CHANNELS OR STREAM BANKS, UPLAND, OR COASTAL OR FRESHWATER WETLANDS OFF THE PROJECT SITE. WHENEVER PRACTICABLE, NO DISTURBANCE ACTIVITIES SHOULD TAKE PLACE WITHIN 50 FEET OF ANY PROTECTED NATURAL RESOURCE. IF DISTURBANCE ACTIVITIES TAKE PLACE BETWEEN 30 FEET AND 50 FEET OF ANY PROTECTED NATURAL RESOURCE, AND STORMWATER DISCHARGES THROUGH THE DISTURBED AREAS TOWARD THE PROTECTED NATURAL RESOURCE, PERIMETER EROSION CONTROLS MUST BE DOUBLED. IF DISTURBANCE ACTIVITIES TAKE PLACE LESS THAN 30 FEET FROM ANY PROTECTED NATURAL RESOURCE, AND STORMWATER DISCHARGES THROUGH THE DISTURBED AREAS TOWARD THE PROTECTED NATURAL RESOURCE, PERIMETER EROSION CONTROLS MUST BE DOUBLED AND DISTURBED AREAS MUST BE TEMPORARILY OR PERMANENTLY STABILIZED WITHIN 7 DAYS.

1.2 SEDIMENT BARRIERS. PRIOR TO CONSTRUCTION, PROPERLY INSTALL SEDIMENT BARRIERS AT THE DOWNGRADIENT EDGE OF ANY AREA TO BE DISTURBED AND ADJACENT TO ANY DRAINAGE CHANNELS WITHIN THE DISTURBED AREA. SEDIMENT BARRIERS SHOULD BE INSTALLED DOWNGRADIENT OF SOIL OR SEDIMENT STOCKPILES AND STORMWATER PREVENTED FROM RUNNING ONTO THE STOCKPILE. MAINTAIN THE SEDIMENT BARRIERS BY REMOVING ACCUMULATED SEDIMENT, OR REMOVING AND REPLACING THE BARRIER, UNTIL THE DISTURBED AREA IS PERMANENTLY STABILIZED. WHERE A DISCHARGE TO A STORM DRAIN INLET OCCURS, IF THE STORM DRAIN CARRIES WATER DIRECTLY TO A SURFACE WATER AND YOU HAVE AUTHORITY TO ACCESS THE STORM DRAIN INLET, YOU MUST INSTALL AND MAINTAIN PROTECTION MEASURES THAT REMOVE SEDIMENT FROM THE DISCHARGE.

1.3 STABILIZED CONSTRUCTION ENTRANCE. PRIOR TO CONSTRUCTION, PROPERLY INSTALL A STABILIZED CONSTRUCTION ENTRANCE (SCE) AT ALL POINTS OF EGRESS FROM THE SITE. THE SCE IS A STABILIZED PAD OF AGGREGATE, UNDERLAIN BY A GEOTEXTILE FILTER FABRIC, USED TO PREVENT TRAFFIC FROM TRACKING MATERIAL AWAY FROM THE SITE ONTO PUBLIC ROWS. MAINTAIN THE SCE UNTIL ALL DISTURBED AREAS ARE STABILIZED.

1.4 TEMPORARY STABILIZATION. WITHIN 7 DAYS OF THE CESSATION OF CONSTRUCTION ACTIVITIES IN AN AREA THAT WILL NOT BE WORKED FOR MORE THAN 7 DAYS, STABILIZE ANY EXPOSED SOIL WITH MULCH, OR OTHER NON-ERODIBLE COVER. STABILIZE AREAS WITHIN 75 FEET OF A WETLAND OR WATERBODY WITHIN 48 HOURS OF THE INITIAL DISTURBANCE OF THE SOIL OR PRIOR TO ANY STORM EVENT, WHICHEVER COMES FIRST.

1.5 REMOVAL OF TEMPORARY MEASURES. REMOVE ANY TEMPORARY CONTROL MEASURES, SUCH AS SILT FENCE, WITHIN 30 DAYS AFTER PERMANENT STABILIZATION IS ATTAINED. REMOVE ANY ACCUMULATED SEDIMENTS AND STABILIZE.

1.6 PERMANENT STABILIZATION. IF THE AREA WILL NOT BE WORKED FOR MORE THAN ONE YEAR OR HAS BEEN BROUGHT TO FINAL GRADE, THEN PERMANENTLY STABILIZE THE AREA WITHIN 7 DAYS BY PLANTING VEGETATION, SEEDING, SOD, OR THROUGH THE USE OF PERMANENT MULCH, OR RIPRAP, OR ROAD SUB-BASE. IF USING VEGETATION FOR STABILIZATION, SELECT THE PROPER VEGETATION FOR THE LIGHT, MOISTURE, AND SOIL CONDITIONS; AMEND AREAS OF DISTURBED SUBSOILS WITH TOPSOIL, COMPOST, OR FERTILIZERS; PROTECT SEEDED AREAS WITH MULCH OR, IF NECESSARY, EROSION CONTROL BLANKETS; AND SCHEDULE SODDING, PLANTING, AND SEEDING SO TO AVOID DIE-OFF FROM SUMMER DROUGHT AND FALL FROSTS. NEWLY SEEDED OR SODDED AREAS MUST BE PROTECTED FROM VEHICLE TRAFFIC, EXCESSIVE PEDESTRIAN TRAFFIC, AND CONCENTRATED RUNOFF UNTIL THE VEGETATION IS WELL-ESTABLISHED WITH 90% COVER BY HEALTHY VEGETATION. IF NECESSARY, AREAS MUST BE REWORKED AND RESTABILIZED IF GERMINATION IS SPARSE, PLANT COVERAGE IS SPOTTY, OR TOPSOIL EROSION IS EVIDENT. ONE OR MORE OF THE FOLLOWING MAY APPLY TO A PARTICULAR SITE.

1.6.1 SEEDED AREAS. FOR SEEDED AREAS, PERMANENT STABILIZATION MEANS A 90% COVER OF THE DISTURBED AREA WITH MATURE, HEALTHY PLANTS WITH NO EVIDENCE OF WASHING OR RILLING OF THE TOPSOIL.

1.6.2 SODDED AREAS. FOR SODDED AREAS, PERMANENT STABILIZATION MEANS THE COMPLETE BINDING OF THE SOD ROOTS INTO THE UNDERLYING SOIL WITH NO SLUMPING OF THE SOD OR DIE-OFF.

1.6.3 PERMANENT MULCH. FOR MULCHED AREAS, PERMANENT MULCHING MEANS TOTAL COVERAGE OF THE EXPOSED AREA WITH AN APPROVED MULCH MATERIAL. EROSION CONTROL MIX MAY BE USED AS MULCH FOR PERMANENT STABILIZATION ACCORDING TO THE APPROVED APPLICATON RATES AND LIMITATIONS.

1.6.4 RIPRAP. FOR AREAS STABILIZED WITH RIPRAP, PERMANENT STABILIZATION MEANS THAT SLOPES STABILIZED WITH RIPRAP HAVE AN APPROPRIATE BACKING OF A WELL-GRADED GRAVEL OR APPROVED GEOTEXTILE TO PREVENT SOIL MOVEMENT FROM BEHIND THE RIPRAP. STONE MUST BE SIZED APPROPRIATELY. IT IS RECOMMENDED THAT ANGULAR STONE BE USED.

1.6.5 AGRICULTURAL USE. FOR CONSTRUCTION PROJECTS ON LAND USED FOR AGRICULTURAL PURPOSES (E.G., PIPELINES ACROSS CROP LAND), PERMANENT STABILIZATION MAY BE ACCOMPLISHED BY RETURNING THE DISTURBED LAND TO AGRICULTURAL USE.

1.6.6 PAVED AREAS. FOR PAVED AREAS, PERMANENT STABILIZATION MEANS THE PLACEMENT OF THE COMPACTED GRAVEL SUBBASE IS COMPLETED, PROVIDED IT IS FREE OF FINE MATERIALS THAT MAY RUNOFF WITH A RAIN EVENT

1.6.7 DITCHES, CHANNELS, AND SWALES. FOR OPEN CHANNELS, PERMANENT STABILIZATION MEANS THE CHANNEL IS STABILIZED WITH A 90% COVER OF HEALTHY VEGETATION, WITH A WELL-GRADED RIPRAP LINING, TURF REINFORCEMENT MAT, OR WITH ANOTHER NON-EROSIVE LINING SUCH AS CONCRETE OR ASPHALT PAVEMENT. THERE MUST BE NO EVIDENCE OF SLUMPING OF THE CHANNEL LINING, UNDERCUTTING OF THE CHANNEL BANKS, OR DOWN-CUTTING OF THE CHANNEL.

1.7 WINTER CONSTRUCTION. "WINTER CONSTRUCTION" IS CONSTRUCTION ACTIVITY PERFORMED DURING THE PERIOD FROM NOVEMBER 1 THROUGH APRIL 15. IF DISTURBED AREAS ARE NOT STABILIZED WITH PERMANENT MEASURES BY NOVEMBER 1 OR NEW SOIL DISTURBANCE OCCURS AFTER NOVEMBER 1, BUT BEFORE APRIL 15, THEN THESE AREAS MUST BE PROTECTED AND RUNOFF FROM THEM MUST BE CONTROLLED BY ADDITIONAL MEASURES AND RESTRICTIONS

1.7.1 SITE STABILIZATION. FOR WINTER STABILIZATION, HAY MULCH IS APPLIED AT TWICE THE STANDARD TEMPORARY STABILIZATION RATE. AT THE END OF EACH CONSTRUCTION DAY, AREAS THAT HAVE BEEN BROUGHT TO FINAL GRADE MUST BE STABILIZED. MULCH MAY NOT BE SPREAD ON TOP OF SNOW.

1.7.2 SEDIMENT BARRIERS. ALL AREAS WITHIN 75 FEET OF A PROTECTED NATURAL RESOURCE (I.E. STREAM THREAD, ETC.) MUST BE PROTECTED WITH A DOUBLE ROW OF SEDIMENT BARRIERS.

1.7.3 DITCH. ALL VEGETATED DITCH LINES THAT HAVE NOT BEEN STABILIZED BY NOVEMBER 1, OR WILL BE WORKED DURING THE WINTER CONSTRUCTION PERIOD, MUST BE STABILIZED WITH AN APPROPRIATE STONE LINING BACKED BY AN APPROPRIATE GRAVEL BED OR GEOTEXTILE UNLESS SPECIFICALLY RELEASED FROM THIS STANDARD BY THE DEPARTMENT.

1.7.4 SLOPES. MULCH NETTING MUST BE USED TO ANCHOR MULCH ON ALL SLOPES GREATER THAN 8% UNLESS EROSION CONTROL BLANKETS OR EROSION CONTROL MIX IS BEING USED ON THESE SLOPES.

1.8 STORMWATER CHANNELS. DITCHES, SWALES, AND OTHER OPEN STORMWATER CHANNELS MUST BE DESIGNED, CONSTRUCTED, AND STABILIZED USING MEASURES THAT ACHIEVE LONG-TERM EROSION CONTROL. DITCHES, SWALES AND OTHER OPEN STORMWATER CHANNELS MUST BE SIZED TO HANDLE, AT A MINIMUM, THE EXPECTED VOLUME RUN-OFF. EACH CHANNEL SHOULD BE CONSTRUCTED IN SECTIONS SO THAT THE SECTION'S GRADING, SHAPING, AND INSTALLATION OF THE PERMANENT LINING CAN BE COMPLETED THE SAME DAY. IF A CHANNEL'S FINAL GRADING OR LINING INSTALLATION MUST BE DELAYED, THEN DIVERSION BERMS MUST BE USED TO DIVERT STORMWATER AWAY FROM THE CHANNEL, PROPERLY-SPACED CHECK DAMS MUST BE INSTALLED IN THE CHANNEL TO SLOW THE WATER VELOCITY, AND A TEMPORARY LINING INSTALLED ALONG THE CHANNEL TO PREVENT SCOURING. PERMANENT STABILIZATION FOR CHANNELS IS ADDRESSED UNDER SECTION 1.6.7 ABOVE.

1.8.1 THE CHANNEL SHOULD RECEIVE ADEQUATE ROUTINE MAINTENANCE TO MAINTAIN CAPACITY AND PREVENT OR CORRECT ANY EROSION OF THE CHANNEL'S BOTTOM OR SIDE SLOPES.

1.8.2 WHEN THE WATERSHED DRAINING TO A DITCH OR SWALE IS LESS THAN 1 ACRE OF TOTAL DRAINAGE AND LESS THAN ¼ ACRE OF IMPERVIOUS AREA, DIVERSION OF RUNOFF TO ADJACENT WOODED OR OTHERWISE VEGETATED BUFFER AREAS IS ENCOURAGED WHERE THE OPPORTUNITY EXISTS.

1.9 SEDIMENT BASINS. SEDIMENT BASINS MUST BE DESIGNED TO PROVIDE STORAGE FOR EITHER THE CALCULATED RUNOFF FROM A 2-YEAR, 24-HOUR STORM OR PROVIDE FOR 3,600 CUBIC FEET OF CAPACITY PER ACRE DRAINING TO THE BASIN. OUTLET STRUCTURES MUST DISCHARGE WATER FROM THE SURFACE OF THE BASIN WHENEVER POSSIBLE. EROSION CONTROLS AND VELOCITY DISSIPATION DEVICES MUST BE USED IF THE DISCHARGING WATERS ARE LIKELY TO CREATE EROSION. ACCUMULATED SEDIMENT MUST BE REMOVED AS NEEDED FROM THE BASIN TO MAINTAIN AT LEAST ½ OF THE DESIGN CAPACITY OF THE BASIN. THE USE OF CATIONIC TREATMENT CHEMICALS, SUCH AS POLYMERS, FLOCCULANTS, OR OTHER CHEMICALS THAT CONTAIN AN OVERALL POSITIVE CHARGE DESIGNED TO REDUCE TURBIDITY IN STORMWATER MUST RECEIVE PRIOR APPROVAL FROM THE DEPARTMENT. WHEN REQUESTING APPROVAL TO USE CATIONIC TREATMENT CHEMICALS, YOU MUST DESCRIBE APPROPRIATE CONTROLS AND IMPLEMENTATION PROCEDURES TO ENSURE THE USE WILL NOT LEAD TO A VIOLATION OF WATER QUALITY STANDARDS. IN ADDITION, YOU MUST SPECIFY THE TYPE(S) OF SOIL LIKELY TO BE TREATED ON THE SITE, CHEMICALS TO BE USED AND HOW THEY ARE TO BE APPLIED AND IN WHAT QUANTITY, ANY MANUFACTURER'S RECOMMENDATIONS, AND ANY TRAINING HAD BY PERSONNEL WHO WILL HANDLE AND APPLY THE CHEMICALS.

1.10 ROADS. GRAVEL AND PAVED ROADS MUST BE DESIGNED AND CONSTRUCTED WITH CROWNS OR OTHER MEASURES, SUCH AS WATER BARS, TO ENSURE THAT STORMWATER IS DELIVERED IMMEDIATELY TO ADJACENT STABLE DITCHES, VEGETATED BUFFER AREAS, CATCH BASIN INLETS, OR STREET GUTTERS.

1.11 CULVERTS. CULVERTS MUST BE SIZED TO AVOID UNINTENDED FLOODING OF UPSTREAM AREAS OR FREQUENT OVERTOPPING OF ROADWAYS. CULVERT INLETS MUST BE PROTECTED WITH APPROPRIATE MATERIALS FOR THE EXPECTED ENTRANCE VELOCITY, AND PROTECTION MUST EXTEND AT LEAST AS HIGH AS THE EXPECTED MAXIMUM ELEVATION OF STORAGE BEHIND THE CULVERT. CULVERT OUTLET DESIGN MUST INCORPORATE MEASURES, SUCH AS APRONS, TO PREVENT SCOUR OF THE STREAM CHANNEL. OUTLET PROTECTION MEASURES MUST BE DESIGNED TO STAY WITHIN THE CHANNEL LIMITS. THE DESIGN MUST TAKE ACCOUNT OF TAILWATER DEPTH.

1.12 PARKING AREAS. PARKING AREAS MUST BE CONSTRUCTED TO ENSURE RUNOFF IS DELIVERED TO ADJACENT SWALES, CATCH BASINS, CURB GUTTERS, OR BUFFER AREAS WITHOUT ERODING AREAS DOWNSLOPE. THE PARKING AREA'S SUBBASE COMPACTION AND GRADING MUST BE DONE TO ENSURE RUNOFF IS EVENLY DISTRIBUTED TO ADJACENT BUFFERS OR SIDE SLOPES. CATCH BASINS MUST BE LOCATED AND SET TO PROVIDE ENOUGH STORAGE DEPTH AT THE INLET TO ALLOW INFLOW OF PEAK RUNOFF RATES WITHOUT BY-PASS OF RUNOFF TO OTHER AREAS.

2 INSPECTION AND MAINTENANCE

2.1 DURING CONSTRUCTION. THE FOLLOWING STANDARDS MUST BE MET DURING CONSTRUCTION.

2.1.1 INSPECTION AND CORRECTIVE ACTION. INSPECT DISTURBED AND IMPERVIOUS AREAS, EROSION CONTROL MEASURES, MATERIALS STORAGE AREAS THAT ARE EXPOSED TO PRECIPITATION, AND LOCATIONS WHERE VEHICLES ENTER OR EXIT THE SITE. INSPECT THESE AREAS AT LEAST ONCE A WEEK AS WELL AS BEFORE AND WITHIN 24 HOURS AFTER A STORM EVENT (RAINFALL), AND PRIOR TO COMPLETING PERMANENT STABILIZATION MEASURES. A PERSON WITH KNOWLEDGE OF EROSION AND STORMWATER CONTROL, INCLUDING THE STANDARDS AND CONDITIONS IN THE PERMIT, SHALL CONDUCT THE INSPECTIONS.

2.1.2 MAINTENANCE. IF BEST MANAGEMENT PRACTICES (BMPS) NEED TO BE REPAIRED, THE REPAIR WORK SHOULD BE INITIATED UPON DISCOVERY OF THE PROBLEM BUT NO LATER THAN THE END OF THE NEXT WORKDAY. IF ADDITIONAL BMPS OR SIGNIFICANT REPAIR OF BMPS ARE NECESSARY, IMPLEMENTATION MUST BE COMPLETED WITHIN 7 CALENDAR DAYS AND PRIOR TO ANY STORM EVENT (RAINFALL). ALL MEASURES MUST BE MAINTAINED IN EFFECTIVE OPERATING CONDITION UNTIL AREAS ARE PERMANENTLY STABILIZED.

2.1.3 DOCUMENTATION. KEEP A LOG (REPORT) SUMMARIZING THE INSPECTIONS AND ANY CORRECTIVE ACTION TAKEN. THE LOG MUST INCLUDE THE NAME(S) AND QUALIFICATIONS OF THE PERSON MAKING THE INSPECTIONS, THE DATE(S) OF THE INSPECTIONS, AND MAJOR OBSERVATIONS ABOUT THE OPERATION AND MAINTENANCE OF EROSION AND SEDIMENTATION CONTROLS, MATERIALS STORAGE AREAS, AND VEHICLES ACCESS POINTS TO THE PARCEL. MAJOR OBSERVATIONS MUST INCLUDE BMPS THAT NEED MAINTENANCE, BMPS THAT FAILED TO OPERATE AS DESIGNED OR PROVED INADEQUATE FOR A PARTICULAR LOCATION, AND LOCATION(S) WHERE ADDITIONAL BMPS ARE NEEDED. FOR EACH BMP REQUIRING MAINTENANCE, BMP NEEDING REPLACEMENT, AND LOCATION NEEDING ADDITIONAL BMPS, NOTE IN THE LOG THE CORRECTIVE ACTION TAKEN AND WHEN IT WAS TAKEN. THE LOG MUST BE MADE ACCESSIBLE TO DEPARTMENT STAFF AND A COPY MUST BE PROVIDED UPON REQUEST. THE PERMITTEE SHALL RETAIN A COPY OF THE LOG FOR A PERIOD OF AT LEAST THREE YEARS FROM THE COMPLETION OF PERMANENT STABILIZATION.

2.2 POST-CONSTRUCTON. THE FOLLOWING STANDARDS MUST BE MET AFTER CONSTRUCTION.

2.2.1 PLAN. CARRY OUT AN APPROVED INSPECTION AND MAINTENANCE PLAN THAT IS CONSISTENT WITH THE MINIMUM REQUIREMENTS OF THIS SECTION. THE PLAN MUST ADDRESS INSPECTION AND MAINTENANCE OF THE PROJECT'S PERMANENT EROSION CONTROL MEASURES AND STORMWATER MANAGEMENT SYSTEM.

2.2.2 INSPECTION AND MAINTENANCE. ALL MEASURES MUST BE MAINTAINED IN EFFECTIVE OPERATING CONDITION. A PERSON WITH KNOWLEDGE OF EROSION AND STORMWATER CONTROL, INCLUDING THE STANDARDS AND CONDITIONS IN THE PERMIT, SHALL CONDUCT THE INSPECTIONS. THE FOLLOWING AREAS, FACILITIES, AND MEASURES MUST BE INSPECTED AND IDENTIFIED DEFICIENCIES MUST BE CORRECTED. AREAS, FACILITIES, AND MEASURES OTHER THAN THOSE LISTED BELOW MAY ALSO REQUIRE INSPECTION ON A SPECIFIC SITE. INSPECTION OR MAINTENANCE TASKS OTHER THAN THOSE DISCUSSED BELOW MUST BE INCLUDED IN THE MAINTENANCE PLAN DEVELOPED FOR A SPECIFIC SITE.

2.2.2.1 INSPECT VEGETATED AREAS, PARTICULARLY SLOPES AND EMBANKMENTS, EARLY IN THE GROWING SEASON OR AFTER HEAVY RAINS TO IDENTIFY ACTIVE OR POTENTIAL EROSION PROBLEMS. REPLANT BARE AREAS OR AREAS WITH SPARSE GROWTH. WHERE RILL EROSION IS EVIDENT, ARMOR THE AREA WITH AN APPROPRIATE LINING OR DIVERT THE EROSIVE FLOWS TO ON-SITE AREAS ABLE TO WITHSTAND THE CONCENTRATED FLOWS. SEE PERMANENT STABILIZATION STANDARDS IN SECTION 1.6.

2.2.2.2 INSPECT DITCHES, SWALES AND OTHER OPEN STORMWATER CHANNELS IN THE SPRING, IN LATE FALL, AND AFTER HEAVY RAINS TO REMOVE ANY OBSTRUCTIONS TO FLOW, REMOVE ACCUMULATED SEDIMENTS AND DEBRIS, TO CONTROL VEGETATED GROWTH THAT COULD OBSTRUCT FLOW, AND TO REPAIR ANY EROSION OF THE DITCH LINING. VEGETATED DITCHES MUST BE MOWED AT LEAST ANNUALLY OR OTHERWISE MAINTAINED TO CONTROL THE GROWTH OF WOODY VEGETATION AND MAINTAIN FLOW CAPACITY. ANY WOODY VEGETATION GROWING THROUGH RIPRAP LININGS MUST ALSO BE REMOVED. REPAIR ANY SLUMPING SIDE SLOPES AS SOON AS PRACTICABLE. IF THE DITCH HAS A RIPRAP LINING, REPLACE RIPRAP ON AREAS WHERE ANY UNDERLYING FILTER FABRIC OR UNDERDRAIN GRAVEL IS SHOWING THROUGH THE STONE OR WHERE STONES HAVE DISLODGED. THE CHANNEL MUST RECEIVE ADEQUATE ROUTINE MAINTENANCE TO MAINTAIN CAPACITY AND PREVENT OR CORRECT ANY EROSION OF THE CHANNEL'S BOTTOM OR SIDESLOPES.

2.2.2.3 INSPECT CULVERTS IN THE SPRING, IN LATE FALL, AND AFTER HEAVY RAINS TO REMOVE ANY OBSTRUCTIONS TO FLOW; REMOVE ACCUMULATED SEDIMENTS AND DEBRIS AT THE INLET, AT THE OUTLET, AND WITHIN THE CONDUIT; AND TO REPAIR ANY EROSION DAMAGE AT THE CULVERT'S INLET AND OUTLET.

2.2.2.4 INSPECT AND CLEAN OUT CATCH BASINS. CLEAN-OUT MUST INCLUDE THE REMOVAL AND LEGAL DISPOSAL OF ANY ACCUMULATED SEDIMENTS AND DEBRIS AT THE BOTTOM OF THE BASIN, AT ANY INLET GRATES, AT ANY INFLOW CHANNELS TO THE BASIN, AND AT ANY PIPES BETWEEN BASINS. IF THE BASIN OUTLET IS DESIGNED TO TRAP FLOATABLE MATERIALS, THEN REMOVE THE FLOATING DEBRIS AND ANY FLOATING OILS (USING OIL-ABSORPTIVE PADS).

2.2.2.5 INSPECT RESOURCE AND TREATMENT BUFFERS ONCE A YEAR FOR EVIDENCE OF EROSION, CONCENTRATING FLOW, AND ENCROACHMENT BY DEVELOPMENT. IF FLOWS ARE CONCENTRATING WITHIN A BUFFER, SITE GRADING, LEVEL SPREADERS, OR DITCH TURN-OUTS MUST BE USED TO ENSURE A MORE EVEN DISTRIBUTION OF FLOW INTO A BUFFER. CHECK DOWN SLOPE OF ALL SPREADERS AND TURN-OUTS FOR EROSION. IF EROSION IS PRESENT, ADJUST OR MODIFY THE SPREADER'S OR TURNOUT'S LIP TO ENSURE A BETTER DISTRIBUTION OF FLOW INTO A BUFFER. CLEAN-OUT ANY ACCUMULATION OF SEDIMENT WITHIN THE SPREADER BAYS OR TURN-OUT POOLS.

2.2.2.6 INSPECT AT LEAST ONCE PER YEAR, EACH STORMWATER MANAGEMENT POND OR BASIN, INCLUDING THE POND'S EMBANKMENTS, OUTLET STRUCTURE, AND EMERGENCY SPILLWAY. REMOVE AND DISPOSE OF ACCUMULATED SEDIMENTS IN THE POND. CONTROL WOODY VEGETATION ON THE POND'S EMBANKMENTS.

2.2.2.7 INSPECT AT LEAST ONE PER YEAR, EACH UNDERDRAINED FILTER, INCLUDING THE FILTER EMBANKMENTS, VEGETATION, UNDERDRAIN PIPING, AND OVERFLOW SPILLWAY. REMOVE AND DISPOSE OF ACCUMULATED SEDIMENTS IN THE FILTER. IF NEEDED, REHABILITATE ANY CLOGGED SURFACE LININGS, AND FLUSH UNDERDRAIN PIPING.

2.2.2.8 INSPECT EACH MANUFACTURED SYSTEM INSTALLED ON THE SITE, INCLUDING THE SYSTEM'S INLET, TREATMENT CHAMBER(S), AND OUTLET AT LEAST ONCE PER YEAR, OR IN ACCORDANCE WITH THE MAINTENANCE GUIDELINES RECOMMENDED BY THE MANUFACTURER BASED ON THE ESTIMATED RUNOFF AND POLLUTANT LOAD EXPECTED TO THE SYSTEM FROM THE PROJECT. REMOVE AND DISPOSE OF ACCUMULATED SEDIMENTS, DEBRIS, AND CONTAMINATED WATERS FROM THE SYSTEM AND, IF APPLICABLE, REMOVE AND REPLACE ANY CLOGGED OR SPENT FILTER MEDIA.

2.2.3 REGULAR MAINTENANCE

2.2.3.1 CLEAR ACCUMULATIONS OF WINTER SAND IN PARKING LOTS AND ALONG ROADWAYS AT LEAST ONCE A YEAR, PREFERABLY IN THE SPRING. ACCUMULATIONS ON PAVEMENT MAY BE REMOVED BY PAVEMENT SWEEPING. ACCUMULATIONS OF SAND ALONG ROAD SHOULDERS MAY BE REMOVED BY GRADING EXCESS SAND TO THE PAVEMENT EDGE AND REMOVING IT MANUALLY OR BY A FRONT-END LOADER. GRADING OF GRAVEL ROADS, OR GRADING OF THE GRAVEL SHOULDERS OF GRAVEL OR PAVED ROADS, MUST BE ROUTINELY PERFORMED TO ENSURE THAT STORMWATER DRAINS IMMEDIATELY OFF THE ROAD SURFACE TO ADJACENT BUFFER AREAS OR STABLE DITCHES, AND IS NOT IMPEDED BY ACCUMULATIONS OF GRADED MATERIAL ON THE ROAD SHOULDER OR BY EXCAVATION OF FALSE DITCHES IN THE SHOULDER. IF WATER BARS OR OPEN-TOP CULVERTS ARE USED TO DIVERT RUNOFF FROM ROAD SURFACES, CLEAN-OUT ANY SEDIMENTS WITHIN OR AT THE OUTLET OF THESE STRUCTURES TO RESTORE THEIR FUNCTION.

2.2.3.2 MANAGE EACH BUFFER'S VEGETATION CONSISTENTLY WITH THE REQUIREMENTS IN ANY DEED RESTRICTIONS FOR THE BUFFER. WOODED BUFFERS MUST REMAIN FULLY WOODED AND HAVE NO DISTURBANCE TO THE DUFF LAYER. VEGETATION IN NON-WOODED BUFFERS MAY NOT BE CUT MORE THAN THREE TIMES PER YEAR, AND MAY NOT BE CUT SHORTER THAN SIX INCHES.

2.2.4 DOCUMENTATION. KEEP A LOG (REPORT) SUMMARIZING INSPECTIONS, MAINTENANCE, AND ANY CORRECTIVE ACTIONS TAKEN. THE LOG MUST INCLUDE THE DATE ON WHICH EACH INSPECTION OR MAINTENANCE TASK WAS PERFORMED, A DESCRIPTION OF THE INSPECTION FINDINGS OR MAINTENANCE COMPLETED, AND THE NAME OF THE INSPECTOR OR MAINTENANCE PERSONNEL PERFORMING THE TASK. IF A MAINTENANCE TASK REQUIRES THE CLEAN-OUT OF ANY SEDIMENTS OR DEBRIS, INDICATE WHERE THE SEDIMENT AND DEBRIS WAS DISPOSED AFTER REMOVAL. THE LOG MUST BE MADE ACCESSIBLE TO DEPARTMENT STAFF AND A COPY PROVIDED TO THE DEPARTMENT UPON REQUEST. THE PERMITTEE SHALL RETAIN A COPY OF THE LOG FOR A PERIOD OF AT LEAST FIVE YEARS FROM THE COMPLETION OF PERMANENT STABILIZATION.

2.3 RE-CERTIFICATION. SUBMIT A CERTIFICATION OF THE FOLLOWING TO THE DEPARTMENT WITHIN THREE MONTHS OF THE EXPIRATION OF EACH FIVE-YEAR INTERVAL FROM THE DATE OF ISSUANCE OF THE PERMIT.

2.3.1 IDENTIFICATION AND REPAIR OF EROSION PROBLEMS. ALL AREAS OF THE PROJECT SITE HAVE BEEN INSPECTED FOR AREAS OF EROSION, AND APPROPRIATE STEPS HAVE BEEN TAKEN TO PERMANENTLY STABILIZE THESE AREAS.

2.3.2 INSPECTION AND REPAIR OF STORMWATER CONTROL SYSTEM. ALL ASPECTS OF THE STORMWATER CONTROL SYSTEM HAVE BEEN INSPECTED FOR DAMAGE, WEAR, AND MALFUNCTION, AND APPROPRIATE STEPS HAVE BEEN TAKEN TO REPAIR OR REPLACE THE SYSTEM, OR PORTIONS OF THE SYSTEM.

2.3.3 MAINTENANCE. THE EROSION AND STORMWATER MAINTENANCE PLAN FOR THE SITE IS BEING IMPLEMENTED AS WRITTEN, OR MODIFICATIONS TO THE PLAN HAVE BEEN SUBMITTED TO AND APPROVED BY THE DEPARTMENT, AND THE MAINTENANCE LOG IS BEING MAINTAINED.

2.3.4 MUNICIPALITIES WITH SEPARATE STORM SEWER SYSTEMS REGULATED UNDER THE MAINE POLLUTANT DISCHARGE ELIMINATION SYSTEM (MPDES) PROGRAM MAY REPORT ON ALL REGULATED SYSTEMS UNDER THEIR CONTROL AS PART OF THEIR REQUIRED ANNUAL REPORTING IN LIEU OF SEPARATE CERTIFICATION OF EACH SYSTEM. MUNICIPALITIES NOT REGULATED BY THE MPDES PROGRAM, BUT THAT ARE RESPONSIBLE FOR MAINTENANCE OF PERMITTED STORMWATER SYSTEMS, MAY REPORT ON MULTIPLE STORMWATER SYSTEMS IN ONE REPORT.

2.4 DURATION OF MAINTENANCE. PERFORM MAINTENANCE AS DESCRIBED AND REQUIRED IN THE PERMIT UNLESS AND UNTIL THE SYSTEM IS FORMALLY ACCEPTED BY THE MUNICIPALITY OR QUASI-MUNICIPAL DISTRICT, OR IS PLACED UNDER THE JURISDICTION OF A LEGALLY CREATED ASSOCIATION THAT WILL BE RESPONSIBLE FOR THE MAINTENANCE OF THE SYSTEM. IF A MUNICIPALITY OR QUASI-MUNICIPAL DISTRICT CHOOSES TO ACCEPT A STORMWATER MANAGEMENT SYSTEM, OR A COMPONENT OF A STORMWATER SYSTEM, IT MUST PROVIDE A LETTER TO THE DEPARTMENT STATING THAT IT ASSUMES RESPONSIBILITY FOR THE SYSTEM. THE LETTER MUST SPECIFY THE COMPONENTS OF THE SYSTEM FOR WHICH THE MUNICIPALITY OR DISTRICT WILL ASSUME RESPONSIBILITY, AND THAT THE MUNICIPALITY OR DISTRICT AGREES TO MAINTAIN THOSE COMPONENTS OF THE SYSTEM IN COMPLIANCE WITH DEPARTMENT STANDARDS. UPON SUCH ASSUMPTION OF RESPONSIBILITY, AND APPROVAL BY THE DEPARTMENT, THE MUNICIPALITY, QUASI-MUNICIPAL DISTRICT, OR ASSOCIATION BECOMES A CO-PERMITTEE FOR THIS PURPOSE ONLY AND MUST COMPLY WITH ALL TERMS AND CONDITIONS OF THE PERMIT.

3 HOUSEKEEPING

3.1 SPILL PREVENTION. CONTROLS MUST BE USED TO PREVENT POLLUTANTS FROM CONSTRUCTION AND WASTE MATERIALS STORED ON SITE TO ENTER STORMWATER, WHICH INCLUDES STORAGE PRACTICES TO MINIMIZE EXPOSURE OF THE MATERIALS TO STORMWATER. THE SITE CONTRACTOR OR OPERATOR MUST DEVELOP, AND IMPLEMENT AS NECESSARY, APPROPRIATE SPILL PREVENTION, CONTAINMENT, AND RESPONSE PLANNING MEASURES.

3.2 GROUNDWATER PROTECTION. DURING CONSTRUCTION, LIQUID PETROLEUM PRODUCTS AND OTHER HAZARDOUS MATERIALS WITH THE POTENTIAL TO CONTAMINATE GROUNDWATER MAY NOT BE STORED OR HANDLED IN AREAS OF THE SITE DRAINING TO AN INFILTRATION AREA. AN "INFILTRATION AREA" IS ANY AREA OF THE SITE THAT BY DESIGN OR AS A RESULT OF SOILS, TOPOGRAPHY AND OTHER RELEVANT FACTORS ACCUMULATES RUNOFF THAT INFILTRATES INTO THE SOIL. DIKES, BERMS, SUMPS, AND OTHER FORMS OF SECONDARY CONTAINMENT THAT PREVENT DISCHARGE TO GROUNDWATER MAY BE USED TO ISOLATE PORTIONS OF THE SITE FOR THE PURPOSES OF STORAGE AND HANDLING OF THESE MATERIALS. ANY PROJECT PROPOSING INFILTRATION OF STORMWATER MUST PROVIDE ADEQUATE PRE-TREATMENT OF STORMWATER PRIOR TO DISCHARGE OF STORMWATER TO THE INFILTRATION AREA, OR PROVIDE FOR TREATMENT WITHIN THE INFILTRATION AREA, IN ORDER TO PREVENT THE ACCUMULATION OF FINES, REDUCTION IN INFILTRATION RATE, AND CONSEQUENT FLOODING AND DESTABILIZATION.

3.3 FUGITIVE SEDIMENT AND DUST. ACTIONS MUST BE TAKEN TO ENSURE THAT ACTIVITIES DO NOT RESULT IN NOTICEABLE EROSION OF SOILS OR FUGITIVE DUST EMISSIONS DURING OR AFTER CONSTRUCTION. OIL MAY NOT BE USED FOR DUST CONTROL, BUT OTHER WATER ADDITIVES MAY BE CONSIDERED AS NEEDED. A STABILIZED CONSTRUCTION ENTRANCE (SCE) SHOULD BE INCLUDED TO MINIMIZE TRACKING OF MUD AND SEDIMENT. IF OFF-SITE TRACKING OCCURS, PUBLIC ROADS SHOULD BE SWEPT IMMEDIATELY AND NO LESS THAN ONCE A WEEK AND PRIOR TO SIGNIFICANT STORM EVENTS. OPERATIONS DURING DRY MONTHS, THAT EXPERIENCE FUGITIVE DUST PROBLEMS, SHOULD WET DOWN UNPAVED ACCESS ROADS ONCE A WEEK OR MORE FREQUENTLY AS NEEDED WITH A WATER ADDITIVE TO SUPPRESS FUGITIVE SEDIMENT AND DUST.

3.4 DEBRIS AND OTHER MATERIALS. MINIMIZE THE EXPOSURE OF CONSTRUCTION DEBRIS, BUILDING AND LANDSCAPING MATERIALS, TRASH, FERTILIZERS, PESTICIDES, HERBICIDES, DETERGENTS, SANITARY WASTE AND OTHER MATERIALS TO PRECIPITATION AND STORMWATER RUNOFF. THESE MATERIALS MUST BE PREVENTED FROM BECOMING A POLLUTANT SOURCE.

3.5 EXCAVATION DE-WATERING. EXCAVATION DE-WATERING IS THE REMOVAL OF WATER FROM TRENCHES, FOUNDATIONS, COFFER DAMS, PONDS, AND OTHER AREAS WITHIN THE CONSTRUCTION AREA THAT RETAIN WATER AFTER EXCAVATION. IN MOST CASES THE COLLECTED WATER IS HEAVILY SILTED AND HINDERS CORRECT AND SAFE CONSTRUCTION PRACTICES. THE COLLECTED WATER REMOVED FROM THE PONDED AREA, EITHER THROUGH GRAVITY OR PUMPING, MUST BE SPREAD THROUGH NATURAL WOODED BUFFERS OR REMOVED TO AREAS THAT ARE SPECIFICALLY DESIGNED TO COLLECT THE MAXIMUM AMOUNT OF SEDIMENT POSSIBLE, LIKE A COFFERDAM SEDIMENTATION BASIN. AVOID ALLOWING THE WATER TO FLOW OVER DISTURBED AREAS OF THE SITE. EQUIVALENT MEASURES MAY BE TAKEN IF APPROVED BY THE DEPARTMENT.

3.6 AUTHORIZED NON-STORMWATER DISCHARGES. IDENTIFY AND PREVENT CONTAMINATION BY NON-STORMWATER DISCHARGES. WHERE ALLOWED NON-STORMWATER DISCHARGES EXIST, THEY MUST BE IDENTIFIED AND STEPS SHOULD BE TAKEN TO ENSURE THE IMPLEMENTATION OF APPROPRIATE POLLUTION PREVENTION MEASURES FOR THE NON-STORMWATER COMPONENT(S) OF THE DISCHARGE. AUTHORIZED NON-STORMWATER DISCHARGES ARE:

3.6.1 DISCHARGES FROM FIREFIGHTING ACTIVITY;
3.6.2 FIRE HYDRANT FLUSHINGS;
3.6.3 VEHICLE WASHWATER IF DETERGENTS ARE NOT USED AND WASHING IS LIMITED TO THE EXTERIOR OF VEHICLES (ENGINE, UNDERCARRIAGE AND TRANSMISSION WASHING IS PROHIBITED);
3.6.4 DUST CONTROL RUNOFF IN ACCORDANCE WITH PERMIT CONDITIONS AND APPENDIX (C)(3);
3.6.5 ROUTINE EXTERNAL BUILDING WASHDOWN, NOT INCLUDING SURFACE PAINT REMOVAL, THAT DOES NOT INVOLVE DETERGENTS;
3.6.6 PAVEMENT WASHWATER (WHERE SPILLS/LEAKS OF TOXIC OR HAZARDOUS MATERIALS HAVE NOT OCCURRED, UNLESS ALL SPILLED MATERIAL HAD BEEN REMOVED) IF DETERGENTS ARE NOT USED;
3.6.7 UNCONTAMINATED AIR CONDITIONING OR COMPRESSOR CONDENSATE;
3.6.8 UNCONTAMINATED GROUNDWATER OR SPRING WATER;
3.6.9 FOUNDATION OR FOOTER DRAIN-WATER WHERE FLOWS ARE NOT CONTAMINATED;
3.6.10 UNCONTAMINATED EXCAVATION DEWATERING (SEE REQUIREMENTS IN APPENDIX C(5));
3.6.11 POTABLE WATER SOURCES INCLUDING WATERLINE FLUSHINGS; AND
3.6.12 LANDSCAPE IRRIGATION.

3.7 UNAUTHORIZED NON-STORMWATER DISCHARGES. THE DEPARTMENT'S APPROVAL UNDER THIS CHAPTER DOES NOT AUTHORIZE A DISCHARGE THAT IS MIXED WITH A SOURCE OF NON-STORMWATER, OTHER THAN THOSE DISCHARGES IN COMPLIANCE WITH APPENDIX C (6). SPECIFICALLY, THE DEPARTMENT'S APPROVAL DOES NOT AUTHORIZE DISCHARGES OF THE FOLLOWING:

3.7.1 WASTEWATER FROM THE WASHOUT OR CLEANOUT OF CONCRETE, STUCCO, PAINT, FORM RELEASE OILS, CURING COMPOUNDS OR OTHER CONSTRUCTION MATERIALS;
3.7.2 FUELS, OILS OR OTHER POLLUTANTS USED IN VEHICLE AND EQUIPMENT OPERATION AND MAINTENANCE;
3.7.3 SOAPS, SOLVENTS, OR DETERGENTS USED IN VEHICLE AND EQUIPMENT WASHING; AND
3.7.4 TOXIC OR HAZARDOUS SUBSTANCES FROM A SPILL OR OTHER RELEASE.

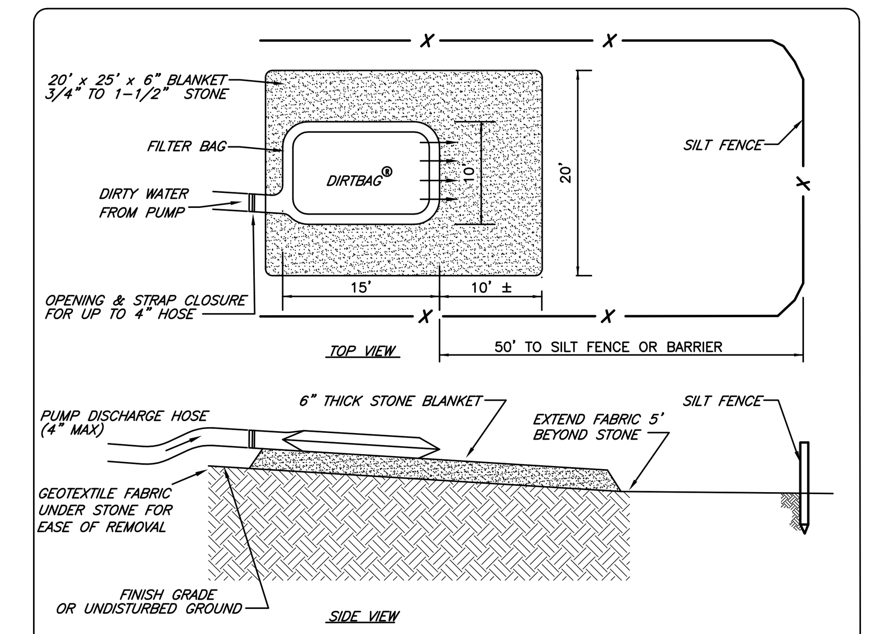

NOTES
1. DIRT BAG MATERIAL BASED ON PARTICLE SIZE IN DIRTY WATER, I.E., FOR COARSE PARTICLES A WOVEN MATERIAL; FOR SILTS/CLAYS A NON-WOVEN MATERIAL.
2. DO NOT OVER PRESSURIZE DIRT BAG OR USE BEYOND CAPACITY.
3. LOCATE DISCHARGE SITE ON FLAT UPLAND AREAS AS FAR AWAY AS POSSIBLE FROM STREAMS, WETLANDS, OTHER RESOURCES AND POINTS OF CONCENTRATED FLOW.
4. DOWNGRADIENT RECEIVING AREA MUST BE WELL VEGETATED OR OTHERWISE STABLE FROM EROSION, E.G., FOREST FLOOR OR COARSE GRAVEL / STONE.
5. DISCHARGE NOT PERMITTED WITHIN 25' OF A STREAM OR WETLAND. CONSULT DEP IF STRUCTURE MUST BE WITHIN 75' OF STREAM OR WATER BODY. SECONDARY CONTAINMENT MAY BE REQUIRED.

PUMPED DISCHARGE SEDIMENT CONTROL DEVICE ("DIRT BAG")

© ME DEP 2003

FILE: DIRTBAG
E:\WCS Details\MDEP\DirtBag.dwg

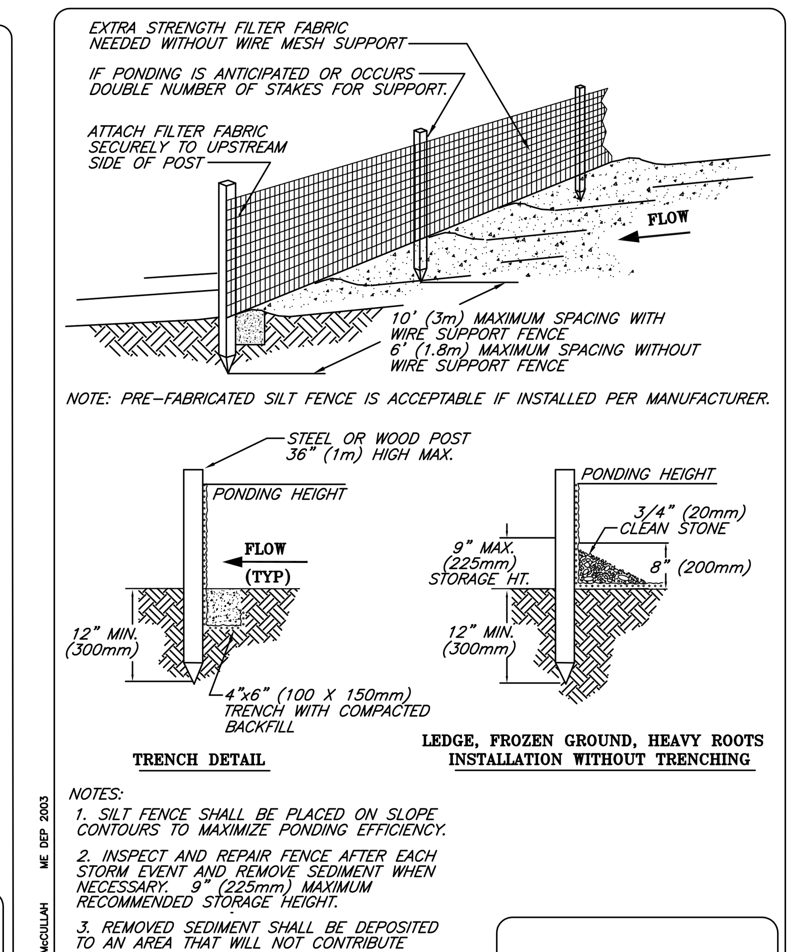

NOTE: PRE-FABRICATED SILT FENCE IS ACCEPTABLE IF INSTALLED PER MANUFACTURER.

NOTES:
1. SILT FENCE SHALL BE PLACED ON SLOPE CONTOURS TO MAXIMIZE PONDING EFFICIENCY.
2. INSPECT AND REPAIR FENCE AFTER EACH STORM EVENT AND REMOVE SEDIMENT WHEN NECESSARY. 9" (225mm) MAXIMUM RECOMMENDED STORAGE HEIGHT.
3. REMOVED SEDIMENT SHALL BE DEPOSITED TO AN AREA THAT WILL NOT CONTRIBUTE SEDIMENT OFF-SITE AND CAN BE PERMANENTLY STABILIZED.
4. DO NOT PLACE SILT FENCE IN STREAMS OR CONCENTRATED FLOW CONDITIONS.

SILT FENCE

© 1994 JOHN McCULLAH ME DEP 2003

FILE: SILTFENC

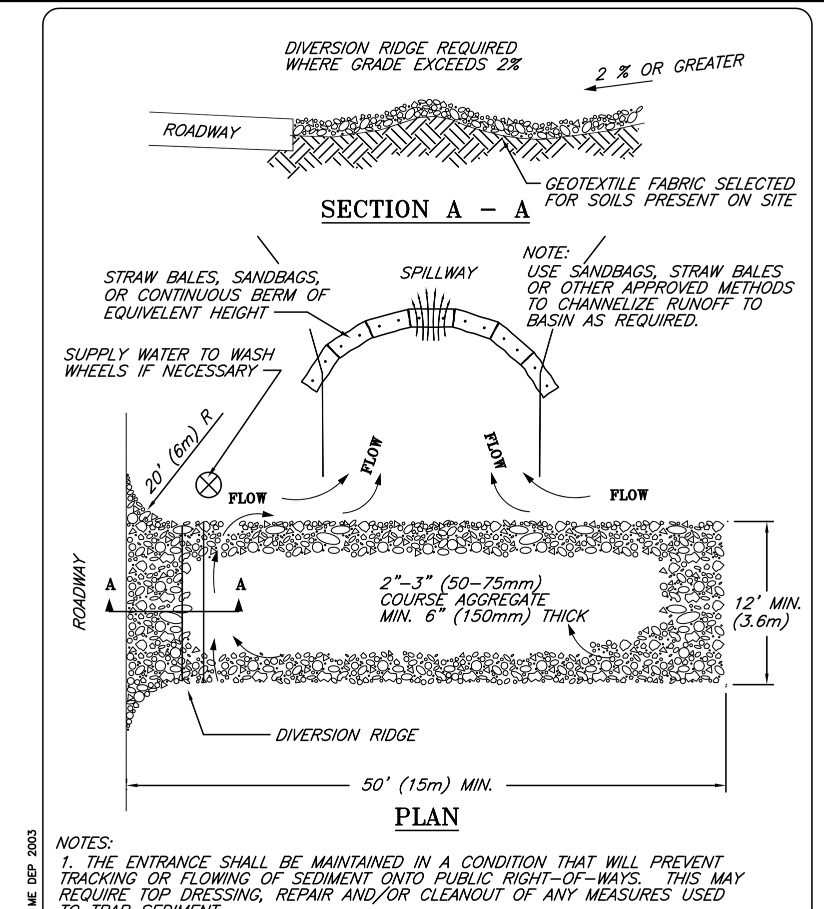

NOTES:
1. THE ENTRANCE SHALL BE MAINTAINED IN A CONDITION THAT WILL PREVENT TRACKING OR FLOWING OF SEDIMENT ONTO PUBLIC RIGHT-OF-WAYS. THIS MAY REQUIRE TOP DRESSING, REPAIR AND/OR CLEANOUT OF ANY MEASURES USED TO TRAP SEDIMENT.
2. WHEN NECESSARY, WHEELS SHALL BE CLEANED PRIOR TO ENTRANCE ONTO PUBLIC RIGHT-OF-WAY.
3. WHEN WASHING IS REQUIRED, IT SHALL BE DONE ON AN AREA STABLIZED WITH CRUSHED STONE THAT DRAINS INTO AN APPROVED SEDIMENT TRAP OR SEDIMENT BASIN.
4. ADDITIONAL SWEEPING OF PUBLIC ROADS MAY ALSO BE REQUIRED.

TEMPORARY GRAVEL CONSTRUCTION ENTRANCE/EXIT

© 1994 JOHN McCULLAH ME DEP 2003

FILE: ENTRANCE

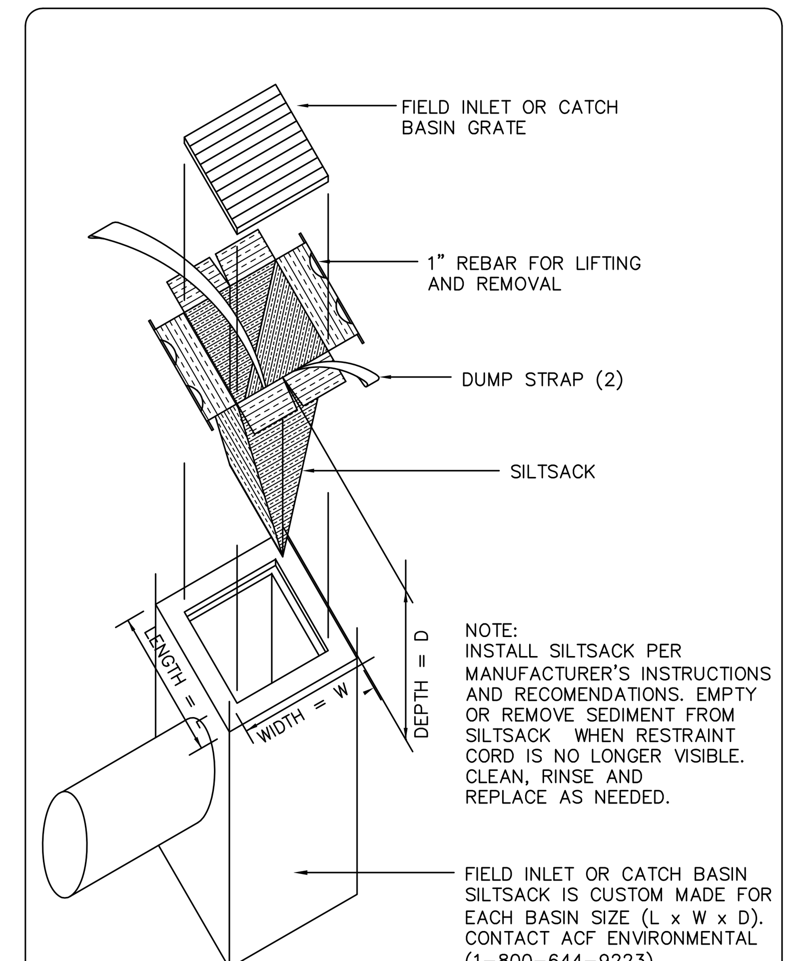

NOTE:
INSTALL SILTSACK PER MANUFACTURER'S INSTRUCTIONS AND RECOMENDATIONS. EMPTY OR REMOVE SEDIMENT FROM SILTSACK WHEN RESTRAINT CORD IS NO LONGER VISIBLE. CLEAN, RINSE AND REPLACE AS NEEDED.

SILTSACK IS CUSTOM MADE FOR EACH BASIN SIZE (L x W x D). CONTACT ACF ENVIRONMENTAL (1-800-644-9223)

SILTSACK INLET SEDIMENT CONTROL DEVICE

© ME DEP 2003

FILE: SILTSACK

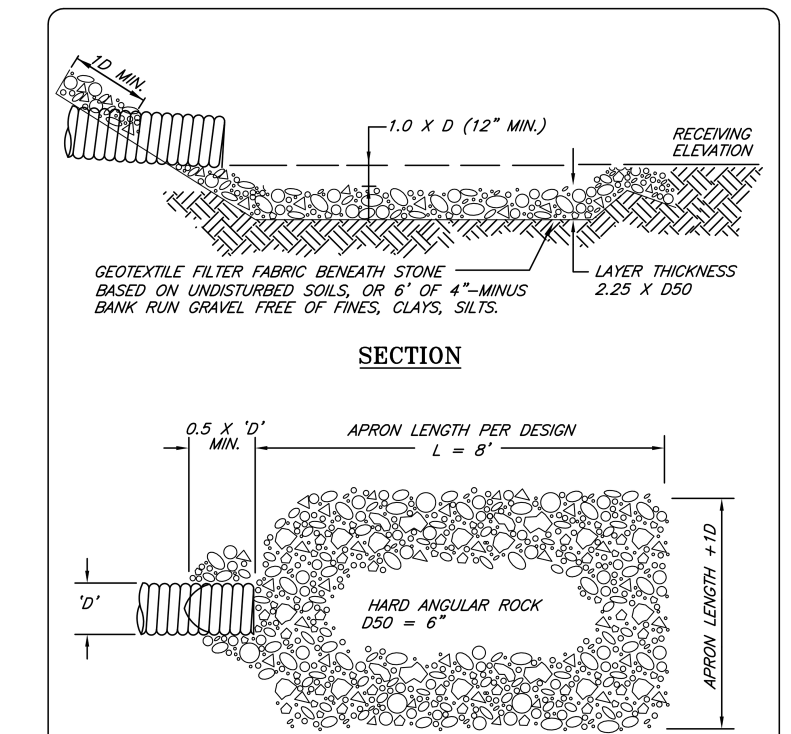

NOTES:
1. CONSULT WITH IF&W IF FISH PASSAGE WILL BE INHIBITED DURING LOW FLOWS.
2. REFER TO DESIGN NOTES AND LIMITATIONS IN TEXT ON PIPE OUTLET PROTECTION.
3. IN DEFINED CHANNELS, APRON SHALL EXTEND FULL WIDTH OF BOTTOM AND ONE FOOT ABOVE MAX. TAILWATER OR UP TO BANK FULL, WHICHEVER IS LESS.

PIPE INLET/OUTLET PROTECTION (RIP RAP)

© 1994 JOHN McCULLAH ME DEP 2003

FILE: OUTLETAPRON

BASIC STANDARDS – EROSION CONTROL MEASURES:

MINIMUM EROSION CONTROL MEASURES WILL NEED TO BE IMPLEMENTED AND THE APPLICANT WILL BE RESPONSIBLE TO MAINTAIN ALL COMPONENTS OF THE EROSION CONTROL PLAN UNTIL THE SITE IS FULLY STABILIZED. HOWEVER, BASED ON SITE AND WEATHER CONDITIONS DURING CONSTRUCTION, ADDITIONAL EROSION CONTROL MEASURES MAY NEED TO BE IMPLEMENTED. ALL AREAS OF INSTABILITY AND EROSION MUST BE REPAIRED IMMEDIATELY DURING CONSTRUCTION AND NEED TO BE MAINTAINED UNTIL THE SITE IS FULLY STABILIZED OR VEGETATION IS ESTABLISHED. A CONSTRUCTION LOG MUST BE MAINTAINED FOR THE EROSION AND SEDIMENTATION CONTROL INSPECTIONS AND MAINTENANCE.

GENERAL NOTE:

ALL TEMPORARY EROSION AND WATER POLLUTION CONTROLS SHALL MEET MDOT ITEM 656.

THIS PLAN IS FOR REVIEW PURPOSES ONLY AND IS NOT INTENDED FOR CONSTRUCTION OR RECORDING

Revision:	By:	Date:	Change:
3	SMA	9/7/18	SUBMITTED FOR FINAL SITE PLAN/SUBDIVISION REVIEW
2	SMA	5/11/18	SUBMITTED FOR PRELIMINARY SITE PLAN/SUBDIVISION REVIEW
1	SMA	5/4/18	SUBMITTED FOR MDEP TIER 1 REVIEW

PROJECT NUMBER: 41041

ACAD FILE: 41041-DETAILS.DWG SCALE: AS NOTED DATE: MAY 1, 2018

Drawing Name:
EROSION & SEDIMENTATION CONTROL NOTES AND DETAILS

Project Name and Location:
PROPOSED CAPISIC MEADOWS SUBDIVISION
130 BANCROFT STREET, PORTLAND, MAINE 04102

Prepared For:
WB GROUP, INC
130 BANCROFT STREET, PORTLAND, MAINE 04102

STATE OF MAINE
ANTHONY P. PANCIOCCO JR.
No. 10941
PROFESSIONAL LICENSED ENGINEER
9-7-18

SHEET 8 OF 15

SURVEYING • ENGINEERING • LAND PLANNING
Northeast Civil Solutions
INCORPORATED
381 PAYNE ROAD, SCARBOROUGH, MAINE 04074
tel 207.883.1000 fax 207.883.1001 e-mail / website info@northeastcivilsolutions.com www.northeastcivilsolutions.com

E:\LAND PROJECT\41000\41041-WAGNER-PORTLAND\PLANSET\41041-DETAILS.DWG

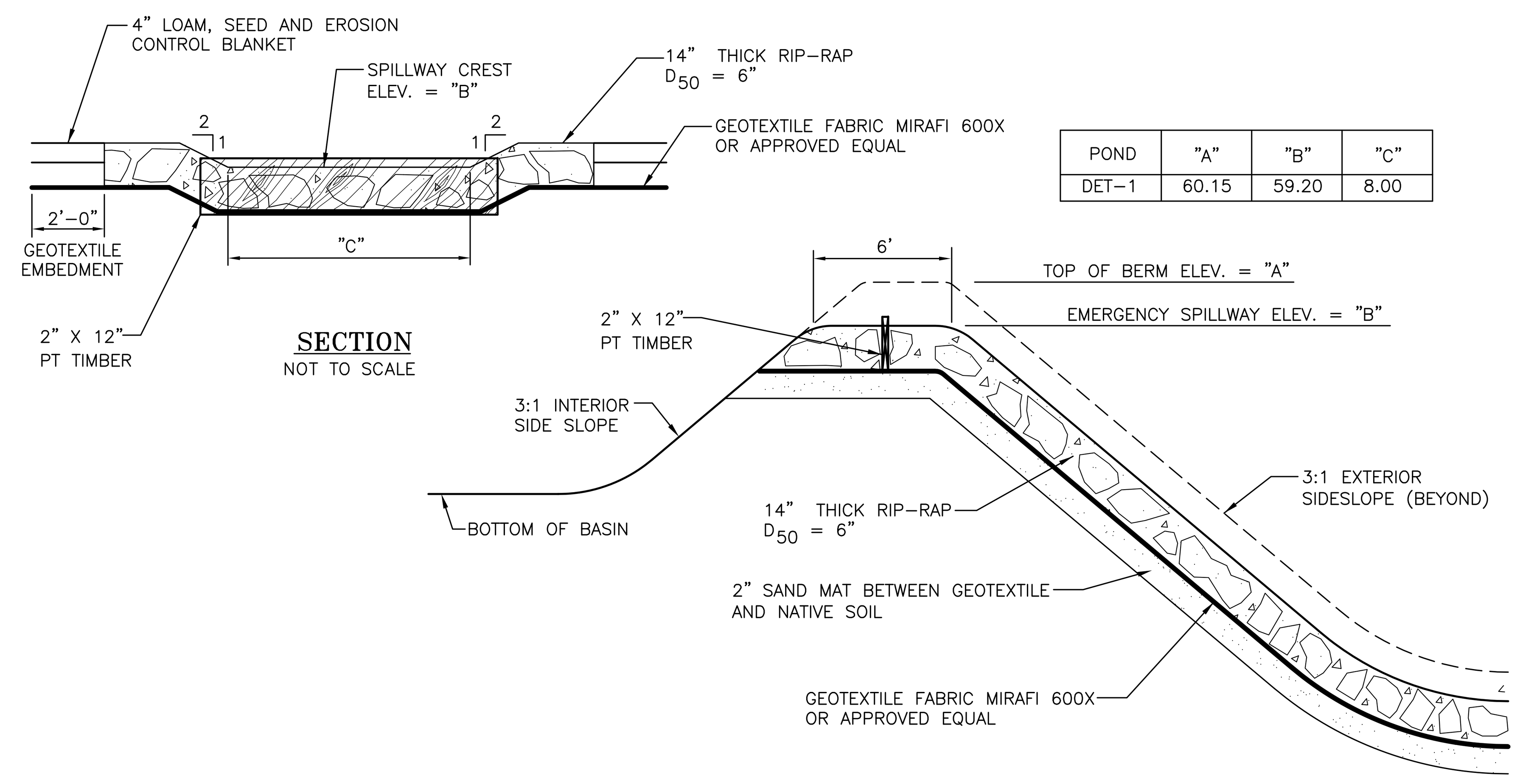

SECTION
NOT TO SCALE

POND	"A"	"B"	"C"
DET-1	60.15	59.20	8.00

CROSS SECTION OF EMERGENCY SPILLWAY
NOT TO SCALE

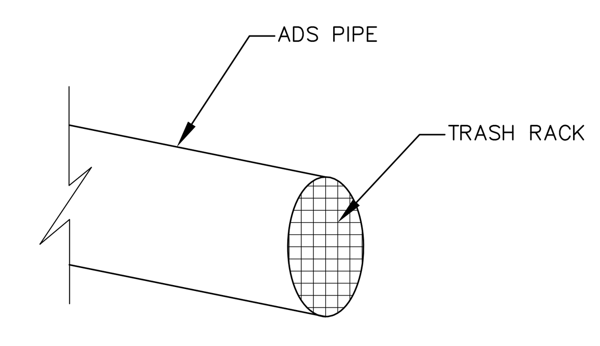

NOTES:
1. PROVIDE TRASH RACK ON ALL OPEN ENDED CULVERTS LESS THAN 36"ø
2. PROVIDE TRASH RACK ON ALL INLETS AND OUTLETS LESS THAN 36"ø

TRASH RACK DETAIL
N.T.S.

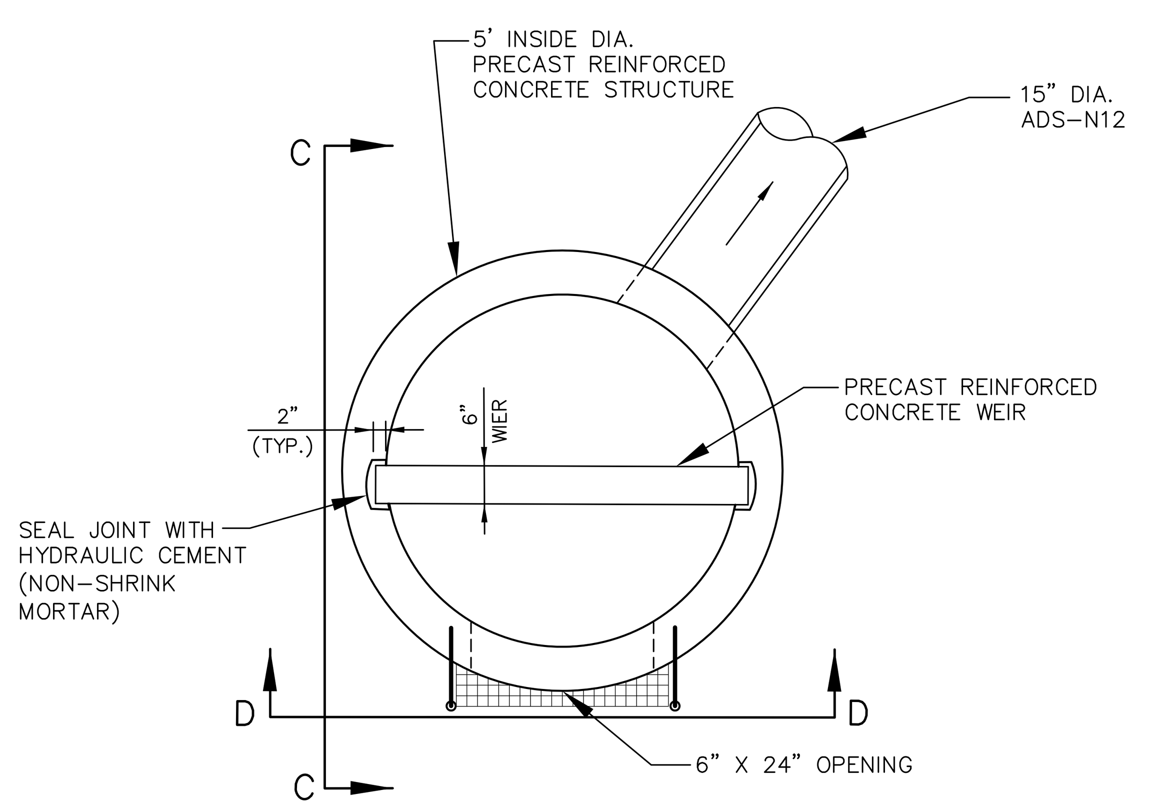

PLAN VIEW

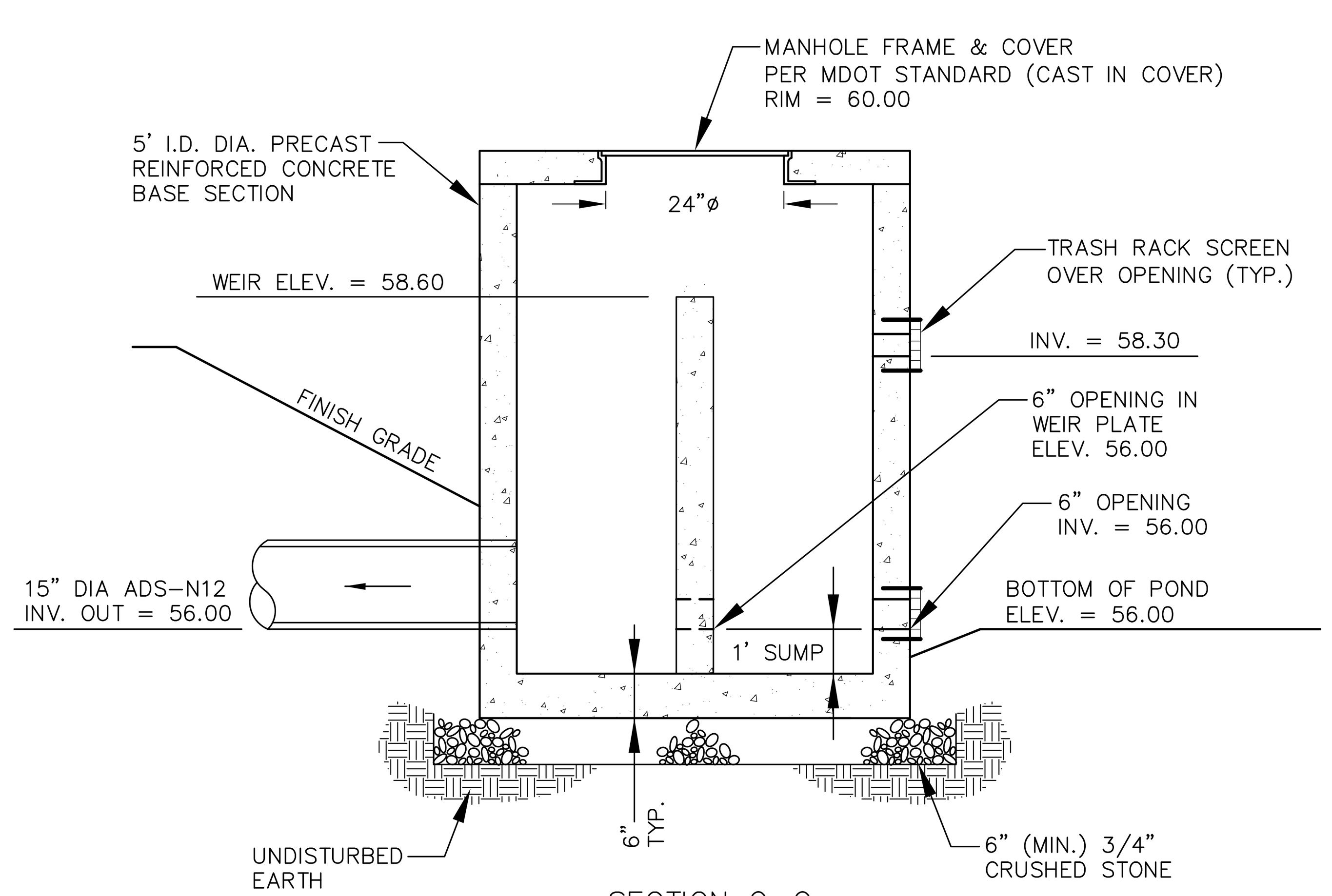

SECTION C-C

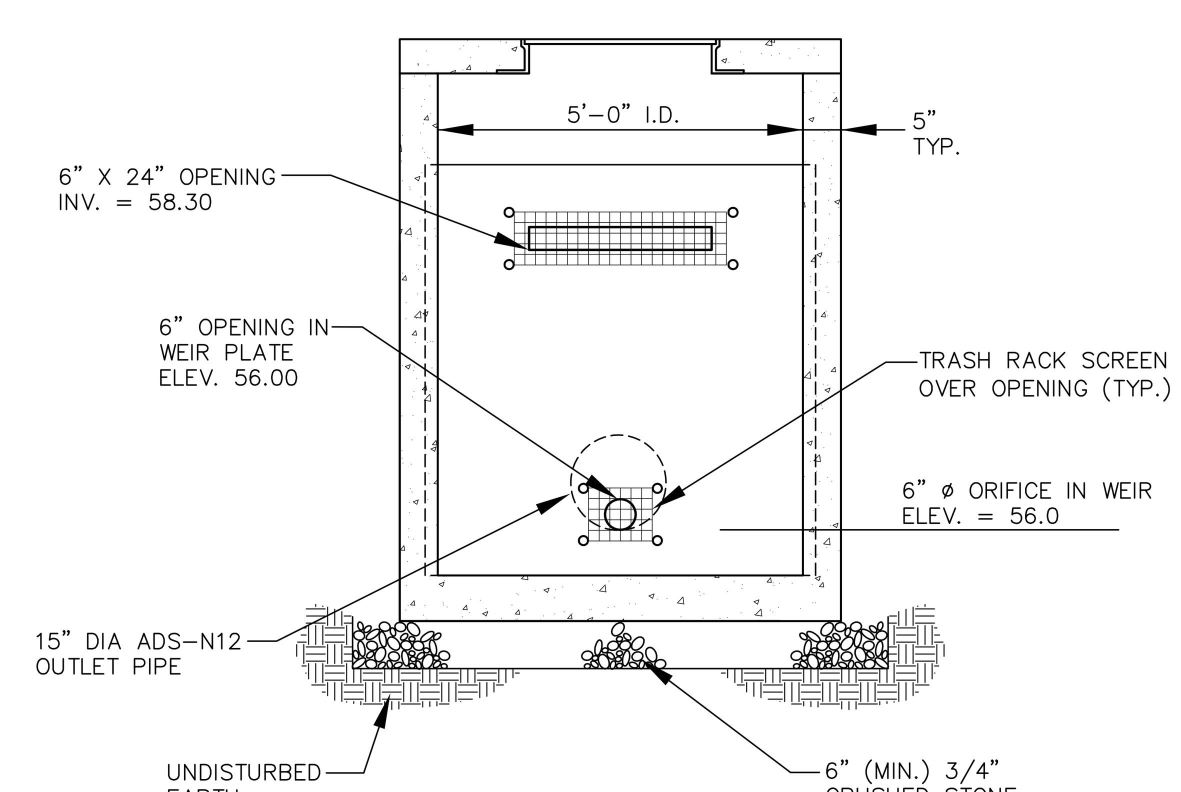

SECTION D-D

PRECAST CONCRETE OUTLET CONTROL STUCTURE (OCS-1)
N.T.S.

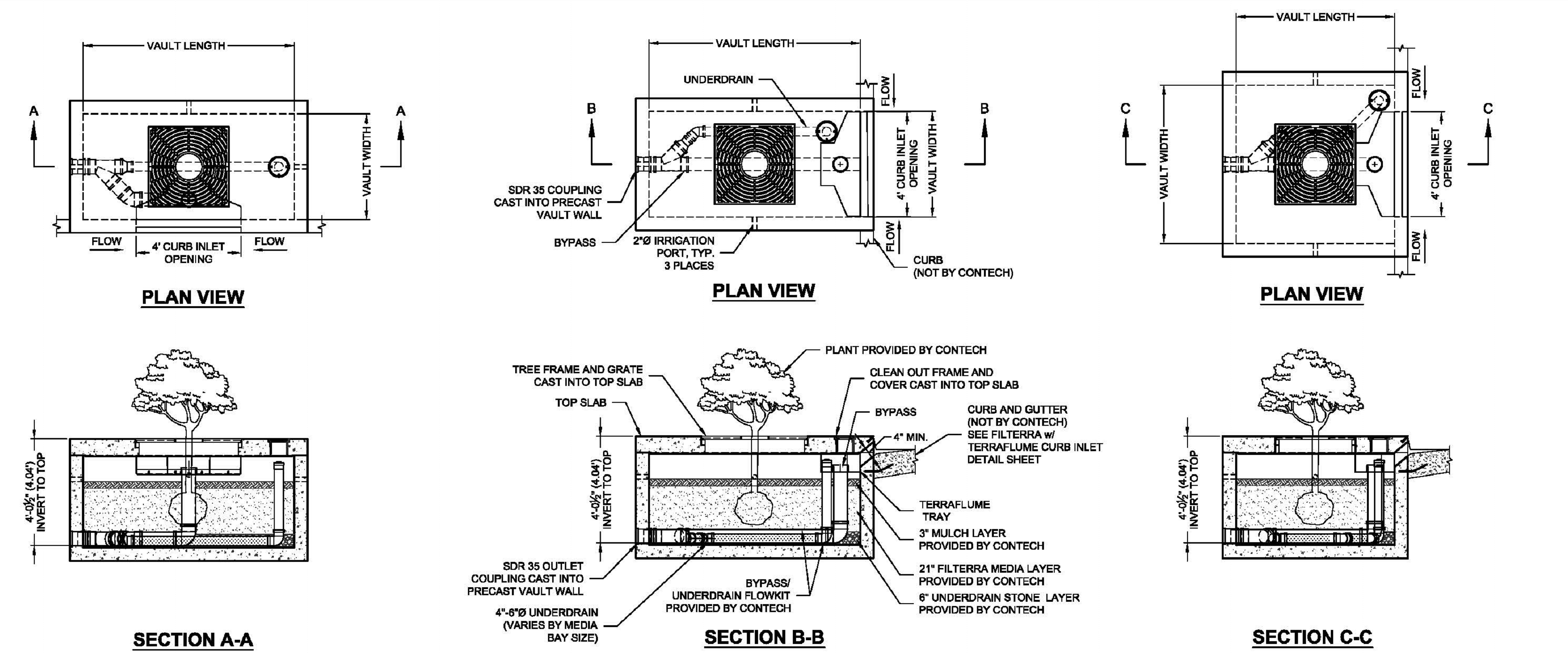

FTIBC LONG SIDE CURB INLET

DESIGNATION	AVAIL-ABILITY	MEDIA BAY SIZE	VAULT SIZE (L x W)	MAX. OUTLET/ BYPASS PIPE DIA.	MAX. BYPASS FLOW (CFS)	UNDER-DRAIN PIPE DIA. (PERF)	TREE GRATE QTY. & SIZE
FTIBC0604	N/A CA	6 x 4	6 x 4	8" SDR 35	1.89	4" SDR 35	(1) 3' x 3'
FTIBC06504	CA ONLY	6.5 x 4	6.5 x 4	8" SDR 35	1.89	4" SDR 35	(1) 3' x 3'
FTIBC078045	MID-ATL ONLY	7.83 x 4.5	7.83 x 4.5	8" SDR 35	1.89	4" SDR 35	(1) 3' x 3'
FTIBC0804	N/A MID-ATL	8 x 4	8 x 4	8" SDR 35	1.89	4" SDR 35	(1) 3' x 3'
FTIBC0806	ALL	8 x 6	8 x 6	10" SDR 35	2.37	4" SDR 35	(1) 4' x 4'
FTIBC1006	ALL	10 x 6	10 x 6	10" SDR 35	2.37	6" SDR 35	(1) 4' x 4'
FTIBC1206	ALL	12 x 6	12 x 6	10" SDR 35	2.37	6" SDR 35	(2) 4' x 4'
FTIBC1307	ALL	13 x 7	13 x 7	10" SDR 35	2.37	6" SDR 35	(2) 4' x 4'

N/A = NOT AVAILABLE

FTIBC SHORT SIDE CURB INLET

DESIGNATION	AVAIL-ABILITY	MEDIA BAY SIZE	VAULT SIZE (W x L)	MAX. OUTLET/ BYPASS PIPE DIA.	MAX. BYPASS FLOW (CFS)	UNDER-DRAIN PIPE DIA. (PERF)	TREE GRATE QTY. & SIZE
FTIBC0406	N/A CA	4 x 6	4 x 6	8" SDR 35	1.89	4" SDR 35	(1) 3' x 3'
FTIBC04065	CA ONLY	4 x 6.5	4 x 6.5	8" SDR 35	1.89	4" SDR 35	(1) 3' x 3'
FTIBC0408	N/A MID-ATL	4 x 8	4 x 8	8" SDR 35	1.89	4" SDR 35	(1) 3' x 3'
FTIBC045078	MID-ATL ONLY	4.5 x 7.83	4.5 x 7.83	8" SDR 35	1.89	4" SDR 35	(1) 3' x 3'
FTIBC0608	ALL	6 x 8	6 x 8	10" SDR 35	2.37	4" SDR 35	(1) 4' x 4'
FTIBC0610	ALL	6 x 10	6 x 10	10" SDR 35	2.37	6" SDR 35	(1) 4' x 4'
FTIBC0612	ALL	6 x 12	6 x 12	10" SDR 35	2.37	6" SDR 35	(2) 4' x 4'
FTIBC0713	ALL	7 x 13	7 x 13	10" SDR 35	2.37	6" SDR 35	(2) 4' x 4'

N/A = NOT AVAILABLE

FTIBC SQUARE CURB INLET

DESIGNATION	AVAIL-ABILITY	MEDIA BAY SIZE	VAULT SIZE (L x W)	MAX. OUTLET/ BYPASS PIPE DIA.	MAX. BYPASS FLOW (CFS)	UNDER-DRAIN PIPE DIA. (PERF)	TREE GRATE QTY. & SIZE
FTIBC0404	ALL	4 x 4	4'-0"	6" SDR 35	1.42	4" SDR 35	(1) 3' x 3'
FTIBC0606	ALL	6 x 6	6'-0"	8" SDR 35	1.89	4" SDR 35	(1) 3' x 3'

N/A = NOT AVAILABLE

INTERNAL PIPE CONFIGURATION MAY VARY DEPENDING ON VAULT SIZE.

filterra

CONTECH ENGINEERED SOLUTIONS LLC
www.ContechES.com
9025 Centre Pointe Dr., Suite 400, West Chester, OH 45069
800-338-1122 513-645-7000 513-645-7993 FAX

FILTERRA INTERNAL BYPASS CURB (FTIBC) CONFIGURATION DETAIL

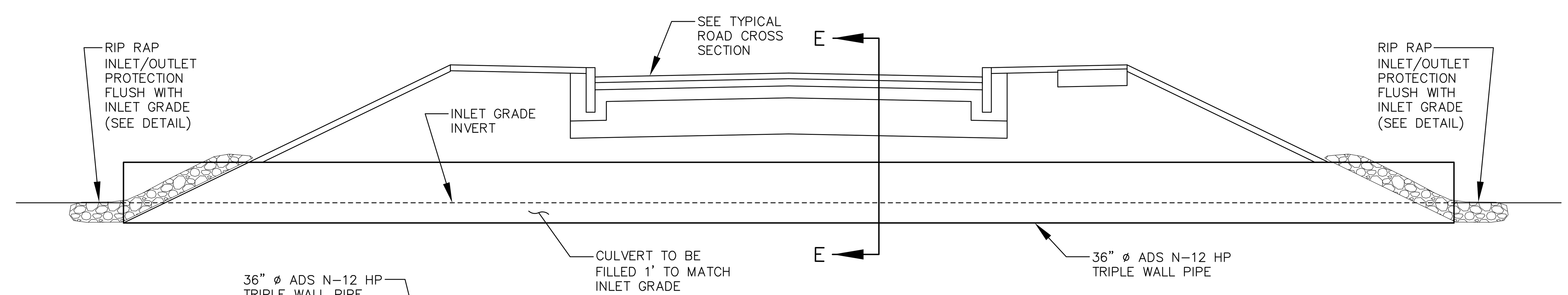

WETLAND CROSSING CULVERT
N.T.S.

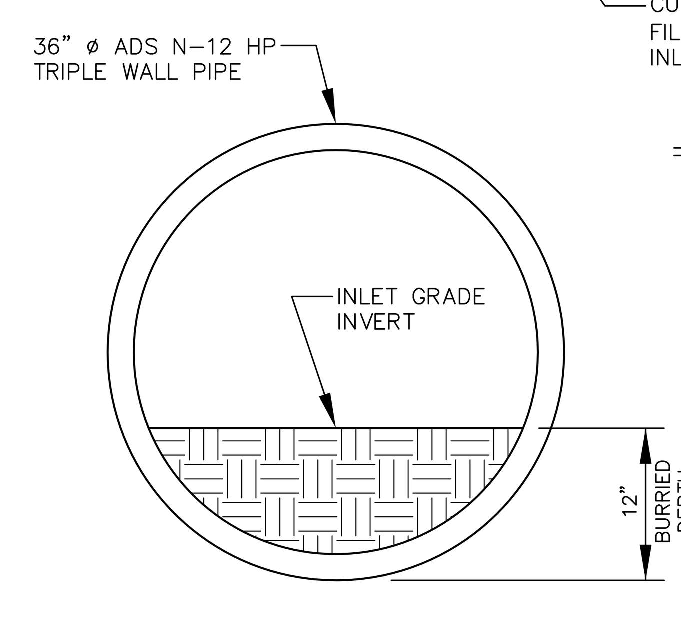

SECTION E-E
N.T.S.

THIS PLAN IS FOR REVIEW PURPOSES ONLY AND IS NOT INTENDED FOR CONSTRUCTION OR RECORDING

Revision:	By:	Date:	Change:
3	SMA	9/7/18	SUBMITTED FOR FINAL SITE PLAN/SUBDIVISION REVIEW
2	SMA	5/11/18	SUBMITTED FOR PRELIMINARY SITE PLAN/SUBDIVISION REVIEW
1	SMA	5/4/18	SUBMITTED FOR MDEP TIER 1 REVIEW

PROJECT NUMBER: 41041 | ACAD FILE: 41041-DETAILS.DWG | SCALE: AS NOTED | DATE: MAY 1, 2018

Drawing Name:
CONSTRUCTION DETAILS - SHEET 1

Project Name and Location:
PROPOSED CAPISIC MEADOWS SUBDIVISION
130 BANCROFT STREET, PORTLAND, MAINE 04102

Prepared For:
WB GROUP, INC
130 BANCROFT STREET, PORTLAND, MAINE 04102

STATE OF MAINE ANTHONY P. PANCIOCCO JR. No. 10941 PROFESSIONAL LICENSED ENGINEER
9-7-18

SHEET 9 OF 15

SURVEYING • ENGINEERING • LAND PLANNING
Northeast Civil Solutions
INCORPORATED
381 PAYNE ROAD, SCARBOROUGH, MAINE 04074
tel 207.883.1000 fax 207.883.1001 e-mail / website info@northeastcivilsolutions.com www.northeastcivilsolutions.com

E:\LAND PROJECT\41000\41041-WAGNER-PORTLAND\PLANSET\41041-DETAILS.DWG

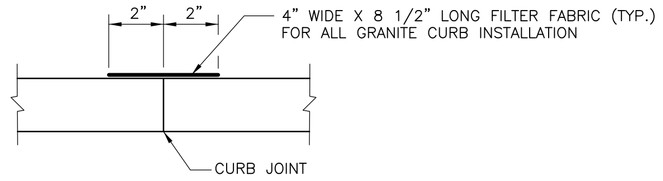

PLAN VIEW

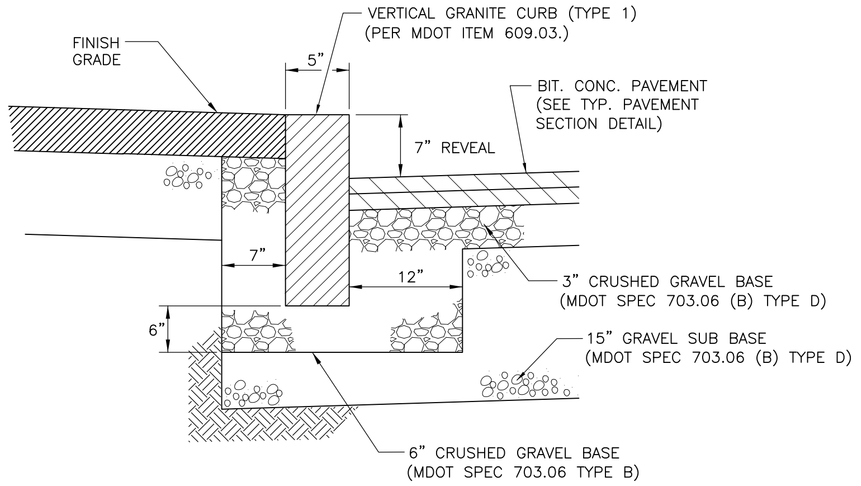

NOTE: PER MDOT ITEM 703.06 (B) TYPE D

VERTICAL GRANITE CURB DETAIL

N.T.S.

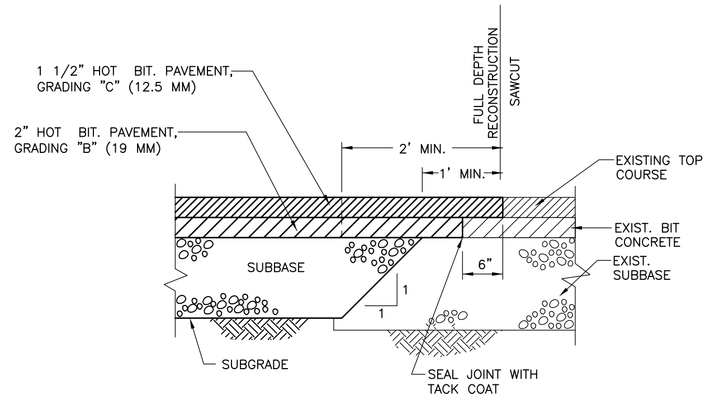

SAWCUT & PAVEMENT MATCH DETAIL

N.T.S.

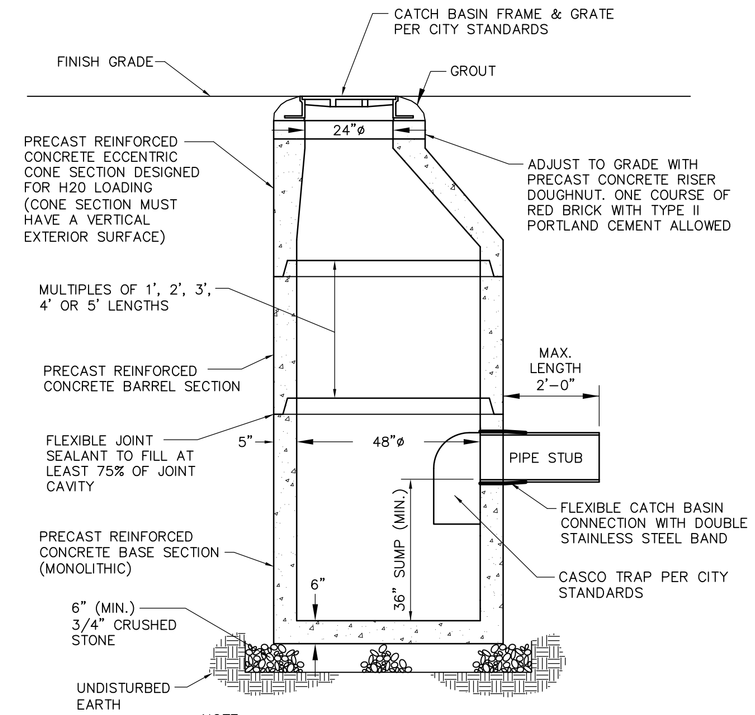

NOTE:
CATCH BASIN, FRAME AND GRATE SHALL BE DESIGNED TO WITHSTAND HS-20 LOADING.

PER MDOT ITEM 604.

PRECAST CONCRETE CATCH BASIN DETAIL

N.T.S.

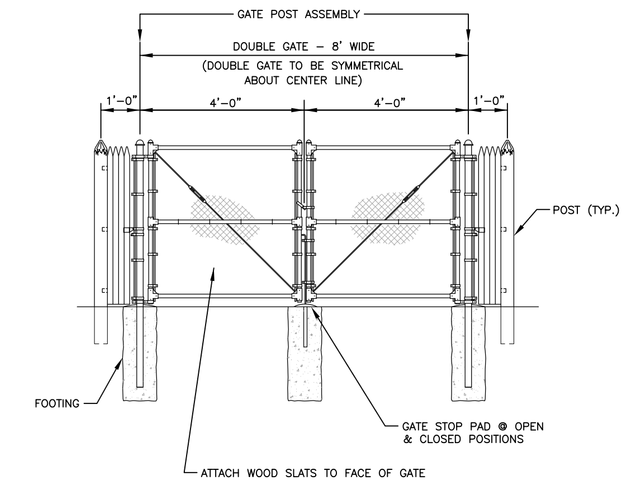

GATE

N.T.S.

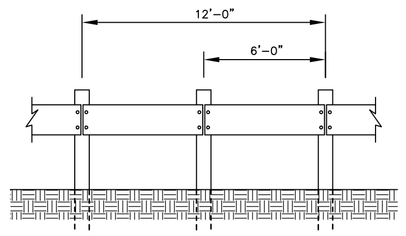

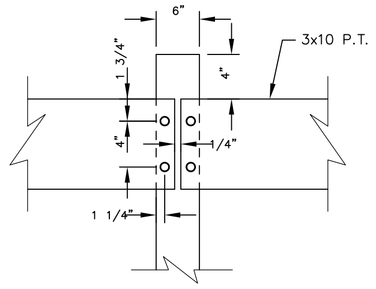

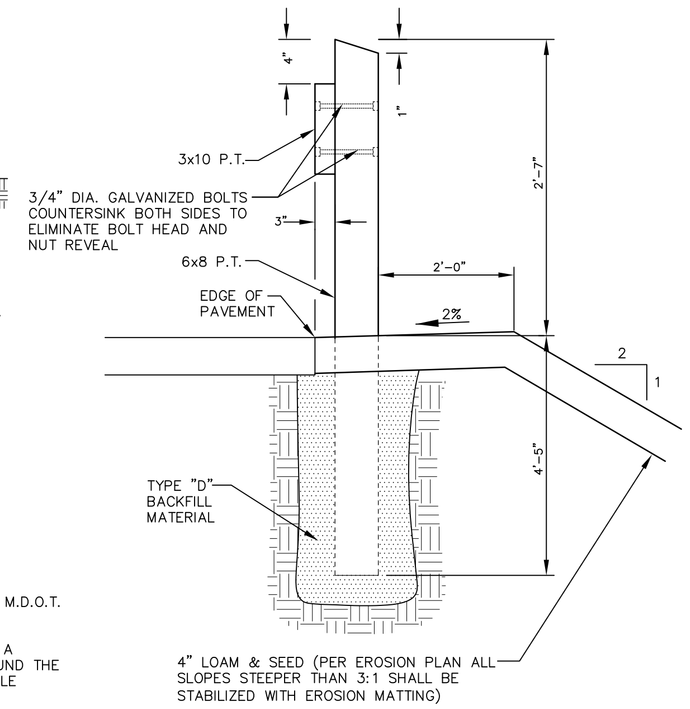

NOTES:

1. MATERIALS USED FOR GUARDRAIL TO MEET M.D.O.T. SPECIFICATION NO. 606.03
2. WHEN SET IN HOLES, POSTS SHALL BE ON A STABLE FOUNDATION AND THE SPACE AROUND THE POSTS BACKFILLED IN LAYERS WITH SUITABLE MATERIAL, THOROUGHLY TAMPED.

PRESSURE TREATED WOOD GUARDRAIL

N.T.S.

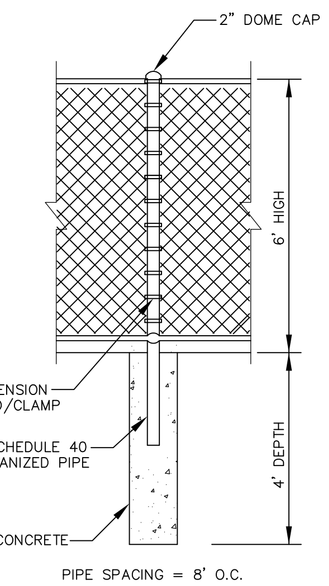

CHAIN LINK FENCE DETAIL

N.T.S.

NOTES:

ALL RAMPS SHALL COMPLY WITH ADA STANDARDS.

LANDING AREA MAY BE REQUIRED BASED ON SIDEWALK DIMENSIONS.

GRANITE CURB ADJACENT TO RAMP SHALL BE FLUSH WITH STREET.

SIDEWALK MATERIAL PER CITY SIDEWALK MATERIAL POLICY.

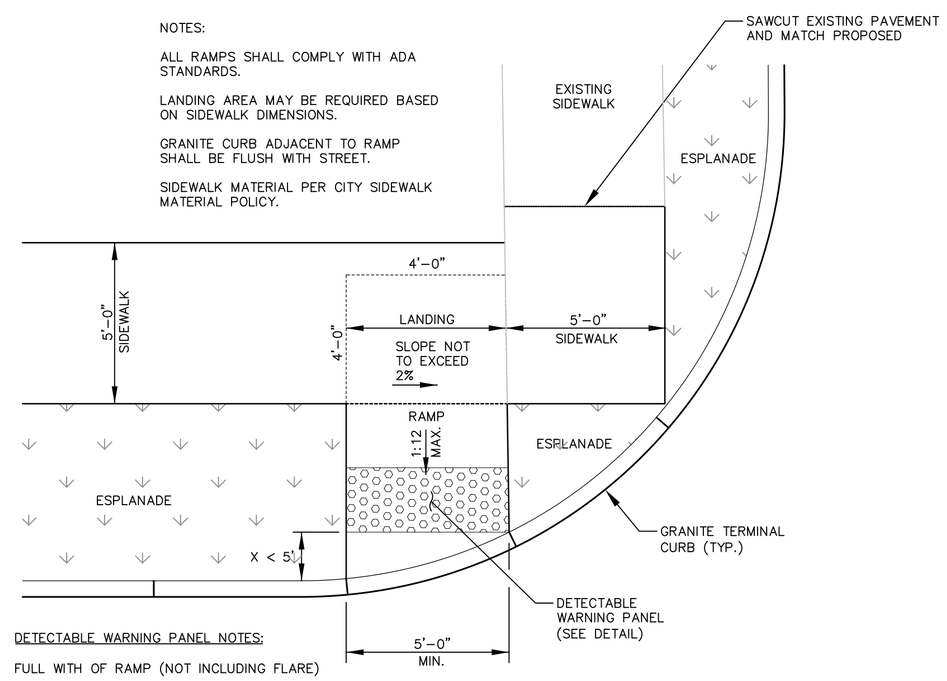

DETECTABLE WARNING PANEL NOTES:

FULL WITH OF RAMP (NOT INCLUDING FLARE)

PANEL ORIENTATED AS SHOWN IF X < 5'
(IF > 5', THEN PANEL IS PARALLEL TO CURB)

SIDEWALK LAYOUT DETAIL

N.T.S.

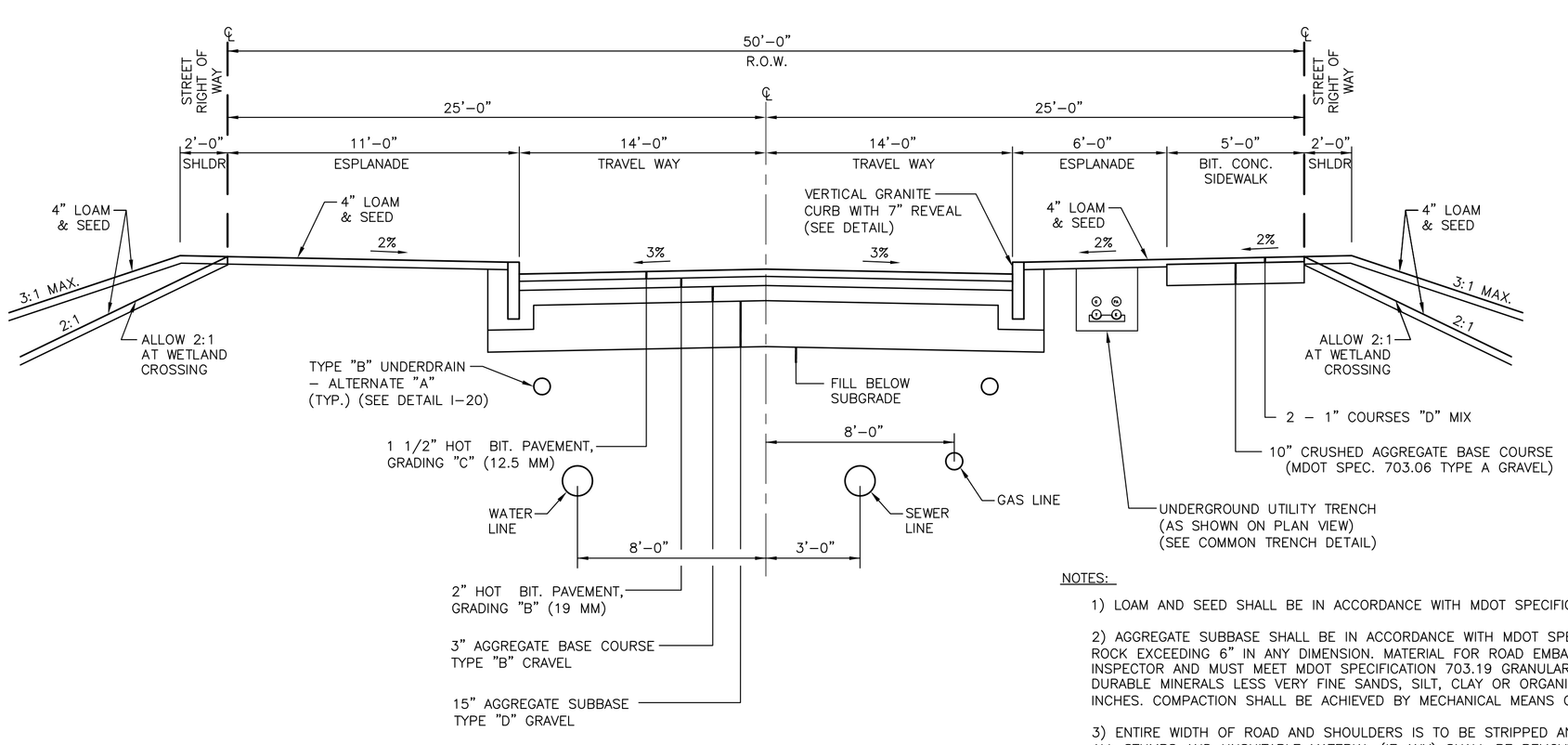

TYPICAL ROAD CROSS SECTION

NOT TO SCALE

NOTES:

1) LOAM AND SEED SHALL BE IN ACCORDANCE WITH MDOT SPECIFICATIONS 615 AND 618, METHOD #1.

2) AGGREGATE SUBBASE SHALL BE IN ACCORDANCE WITH MDOT SPECIFICATIONS, SECTION 403 AND SHALL NOT CONTAIN PARTICLES OF ROCK EXCEEDING 6" IN ANY DIMENSION. MATERIAL FOR ROAD EMBANKMENT SHALL BE SUITABLE EXCAVATED MATERIAL APPROVED BY TOWN INSPECTOR AND MUST MEET MDOT SPECIFICATION 703.19 GRANULAR BORROW. SUITABLE GRANULAR FILL MATERIAL SHALL CONSIST OF HARD DURABLE MINERALS LESS VERY FINE SANDS, SILT, CLAY OR ORGANIC MATERIALS. MATERIAL IS TO BE PLACED IN LIFTS NOT TO EXCEED 12 INCHES. COMPACTION SHALL BE ACHIEVED BY MECHANICAL MEANS OF A "DYNAPAC", RIDING ROLLER, OR TRACKING WITH HEAVY EQUIPMENT.

3) ENTIRE WIDTH OF ROAD AND SHOULDERS IS TO BE STRIPPED AND GRUBBED OF TOP SOIL, ORGANICS AND ALL DELETERIOUS MATERIAL. ALL STUMPS AND UNSUITABLE MATERIAL (IF ANY) SHALL BE REMOVED IF WITHIN 5 FEET OF FINISHED GRADE UNDER PAVED AREAS.

4) SEE GRADING PLAN & PROFILE FOR GRADING INTENT.

5) ALL PROPOSED INFRASTRUCTURE LOCATED WITHIN THE ROAD RIGHT OF WAY SHALL MEET CITY OF PORTLAND TECHNICAL MANUAL STANDARDS.

THIS PLAN IS FOR REVIEW PURPOSES ONLY AND IS NOT INTENDED FOR CONSTRUCTION OR RECORDING

Revision:	By:	Date:	Change:
3	SMA	9/7/18	SUBMITTED FOR FINAL SITE PLAN/SUBDIVISION REVIEW
2	SMA	5/11/18	SUBMITTED FOR PRELIMINARY SITE PLAN/SUBDIVISION REVIEW
1	SMA	5/4/18	SUBMITTED FOR MDEP TIER 1 REVIEW

PROJECT NUMBER: 41041 | ACAD FILE: 41041-DETAILS.DWG | SCALE: AS NOTED | DATE: MAY 1, 2018

Drawing Name:
CONSTRUCTION DETAILS – SHEET 2

Project Name and Location:
PROPOSED CAPISIC MEADOWS SUBDIVISION
130 BANCROFT STREET, PORTLAND, MAINE 04102

Prepared For:
WB GROUP, INC
130 BANCROFT STREET, PORTLAND, MAINE 04102

STATE OF MAINE
ANTHONY P. PANCIOCCO JR.
No. 10941
LICENSED PROFESSIONAL ENGINEER
9-7-18

SHEET 10 OF 15

SURVEYING • ENGINEERING • LAND PLANNING
Northeast Civil Solutions
INCORPORATED
381 PAYNE ROAD, SCARBOROUGH, MAINE 04074
tel 207.883.1000 fax 207.883.1001
e-mail / website
info@northeastcivilsolutions.com
www.northeastcivilsolutions.com

E:\LAND PROJECT\41000\41041-WADNER-PORTLAND\PLANSET\41041-DETAILS.DWG

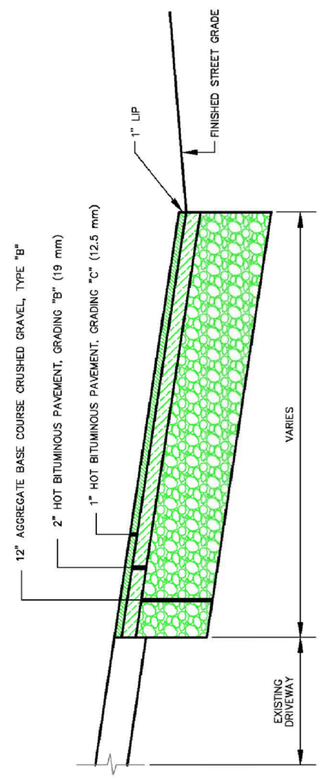

BITUMINOUS DRIVEWAY APRON

NOT TO SCALE

DATE: AUGUST 2009 REVISED:	CITY OF PORTLAND, MAINE TECHNICAL STANDARDS MANUAL	TRANSPORTATION SYSTEMS AND STREET DESIGN SECTION I	FIGURE:
	BITUMINOUS DRIVEWAY APRON		I-13

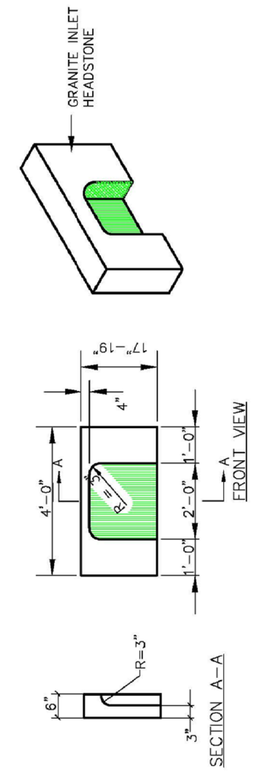

4' GRANITE HEADSTONE FOR CATCH BASIN INLET

NOT TO SCALE

DATE: AUGUST 2009 REVISED:	CITY OF PORTLAND, MAINE TECHNICAL STANDARDS MANUAL	SANITARY SEWER AND STORM DRAIN DESIGN STANDARDS SECTION II	FIGURE:
	4' GRANITE HEADSTONE FOR CATCH BASIN INLET		II-11

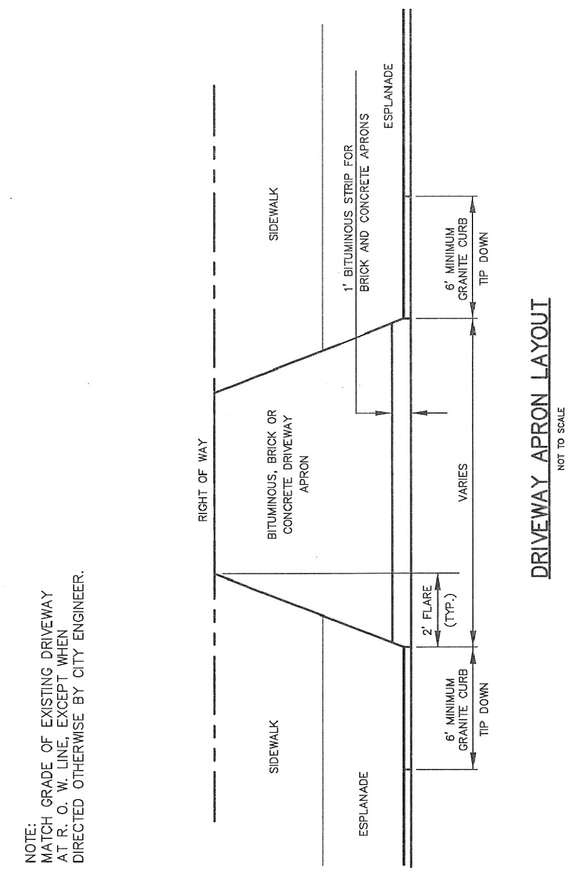

DRIVEWAY APRON LAYOUT

NOT TO SCALE

DATE: AUGUST 2009 REVISED:	CITY OF PORTLAND, MAINE TECHNICAL STANDARDS MANUAL	TRANSPORTATION SYSTEMS AND STREET DESIGN SECTION I	FIGURE:
	DRIVEWAY APRON LAYOUT		I-9

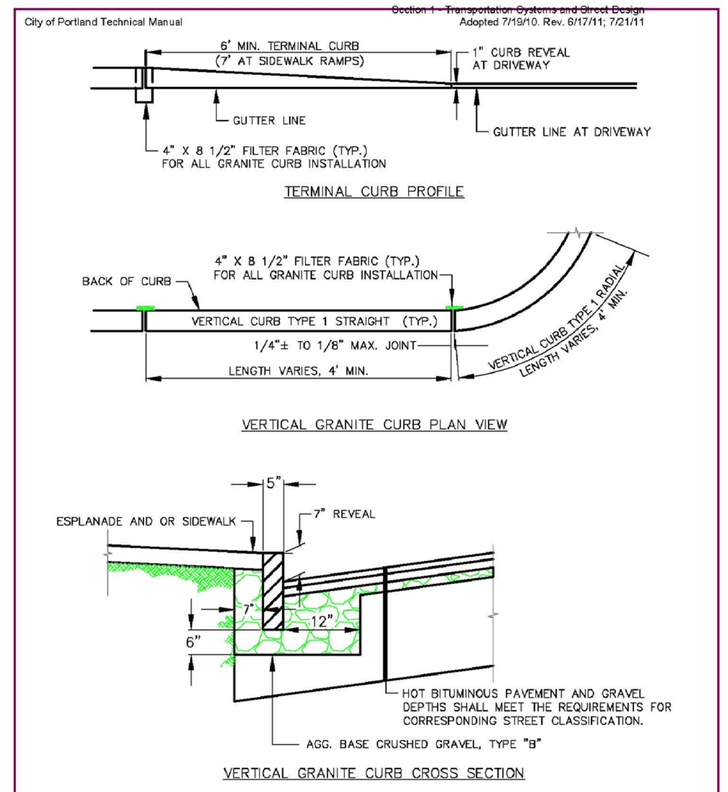

VERTICAL GRANITE CURB FULL DEPTH STREET CONSTRUCTION

NOT TO SCALE

DATE: AUGUST 2009 REVISED:	CITY OF PORTLAND, MAINE TECHNICAL STANDARDS MANUAL	TRANSPORTATION SYSTEMS AND STREET DESIGN SECTION I	FIGURE:
	VERTICAL GRANITE CURB FULL DEPTH STREET CONSTRUCTION		I-16

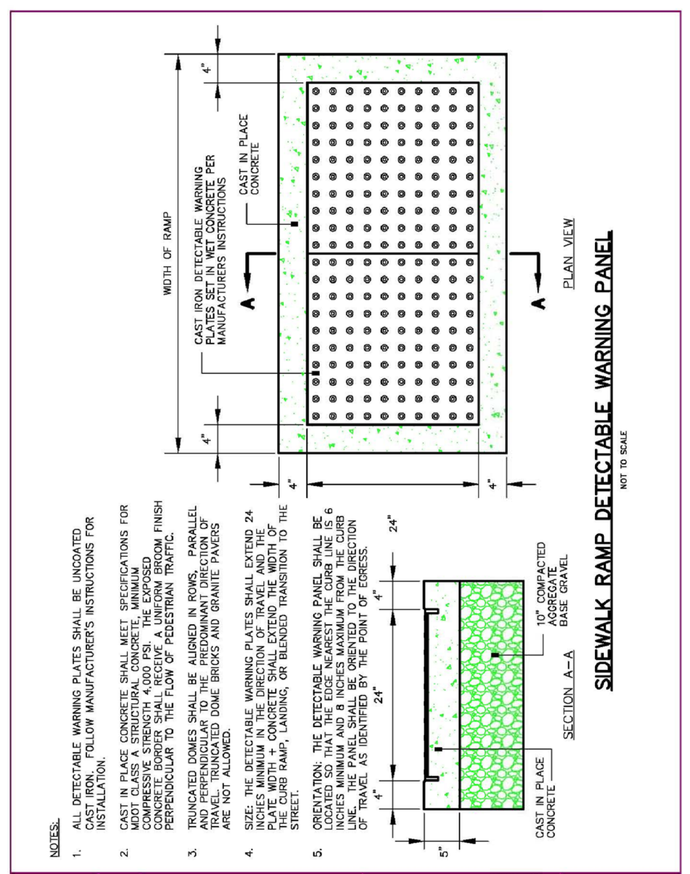

NOTES:

1. ALL DETECTABLE WARNING PLATES SHALL BE UNCOATED CAST IRON. FOLLOW MANUFACTURER'S INSTRUCTIONS FOR INSTALLATION.
2. CAST IN PLACE CONCRETE SHALL MEET SPECIFICATIONS FOR CAST IN PLACE CONCRETE SIDEWALK. MINIMUM FINISH COMPRESSIVE STRENGTH 4,000 PSI. THE EXPOSED CONCRETE SURFACE SHALL HAVE A WIDOM FINISH PERPENDICULAR TO THE FLOW OF PEDESTRIAN TRAFFIC.
3. TRUNCATED DOMES SHALL BE ALIGNED IN ROWS, PARALLEL AND PERPENDICULAR TO THE PREDOMINANT DIRECTION OF PEDESTRIAN TRAVEL. DIAGONAL OR RADIAL ALIGNMENTS ARE NOT ALLOWED.
4. SIZE: THE DETECTABLE WARNING PLATES SHALL EXTEND 24 INCHES MINIMUM IN THE DIRECTION OF TRAVEL AND THE PLATE WIDTH = CONCRETE SHALL EXTEND THE WIDTH OF THE RAMP, LANDING, OR BLENDED TRANSITION TO THE STREET.
5. ORIENTATION: THE DETECTABLE WARNING PANEL SHALL BE LOCATED TO ALLOW A MINIMUM OF 6 INCHES MAXIMUM FROM THE CURB LINE. THE PANEL SHALL BE ORIENTED TO THE DIRECTION OF TRAVEL, AS DEPICTED ON THE PLAN VIEW.

SIDEWALK RAMP DETECTABLE WARNING PANEL

NOT TO SCALE

DATE: OCTOBER 2017 REVISED:	CITY OF PORTLAND, MAINE TECHNICAL STANDARDS MANUAL	TRANSPORTATION SYSTEMS AND STREET DESIGN SECTION I	FIGURE:
	SIDEWALK RAMP DETECTABLE WARNING PANEL		I-7

NOTE:
ALL MANHOLE COVERS SHALL BE SOLID AND SHALL HAVE ONE 7/8" DIAMETER DRILLED PICK HOLE, LOCATED 8" FROM THE CENTER OF THE COVER.

ALL SANITARY MANHOLE COVERS SHALL HAVE "SEWER" CAST INTO THE COVER. ALL STORMWATER/DRAIN MANHOLE COVERS SHALL HAVE "DRAIN" CAST INTO THE COVER.

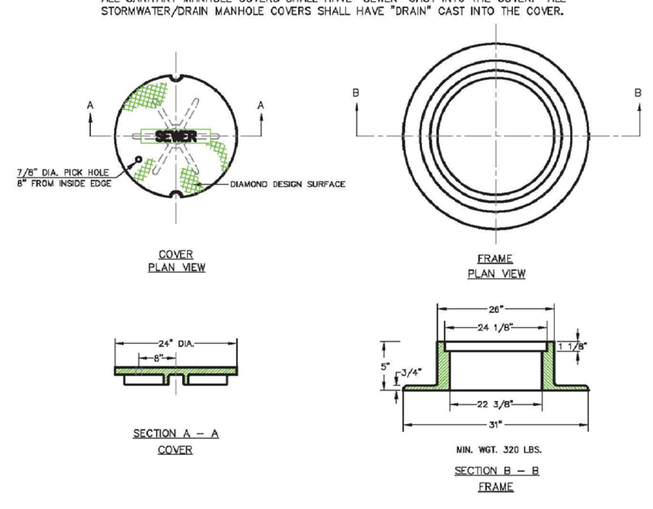

CAST IRON MANHOLE COVER AND FRAME

NOT TO SCALE

DATE: AUGUST 2009 REVISED:	CITY OF PORTLAND, MAINE TECHNICAL STANDARDS MANUAL	SANITARY SEWER AND STORM DRAIN DESIGN STANDARDS SECTION II	FIGURE:
	CAST IRON MANHOLE COVER AND FRAME		II-5

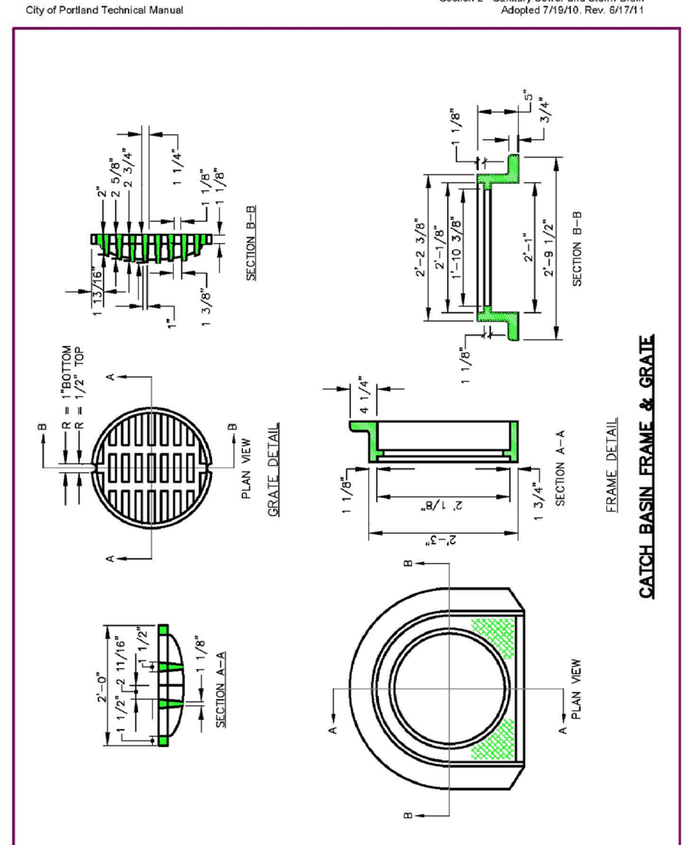

CATCH BASIN FRAME & GRATE

DATE: AUGUST 2009 REVISED:	CITY OF PORTLAND, MAINE TECHNICAL STANDARDS MANUAL	SANITARY SEWER AND STORM DRAIN DESIGN STANDARDS SECTION II	FIGURE:
	CATCH BASIN FRAME AND GRATE		II-7

THIS PLAN IS FOR REVIEW PURPOSES ONLY AND IS NOT INTENDED FOR CONSTRUCTION OR RECORDING

Revision:	By:	Date:	Change:
3	SMA	9/7/18	SUBMITTED FOR FINAL SITE PLAN/SUBDIVISION REVIEW
2	SMA	5/11/18	SUBMITTED FOR PRELIMINARY SITE PLAN/SUBDIVISION REVIEW
1	SMA	5/4/18	SUBMITTED FOR MDEP TIER 1 REVIEW

PROJECT NUMBER: 41041 | ACAD FILE: 41041-DETAILS.DWG | SCALE: AS NOTED | DATE: MAY 1, 2018

Drawing Name:
CONSTRUCTION DETAILS – SHEET 3

Project Name and Location:
PROPOSED CAPISIC MEADOWS SUBDIVISION
130 BANCROFT STREET, PORTLAND, MAINE 04102

Prepared For:
WB GROUP, INC
130 BANCROFT STREET, PORTLAND, MAINE 04102

STATE OF MAINE ANTHONY P. PANCIOCCO JR. No. 10941 LICENSED PROFESSIONAL ENGINEER
9-7-18

SHEET 11 OF 15

SURVEYING • ENGINEERING • LAND PLANNING
Northeast Civil Solutions
INCORPORATED
381 PAYNE ROAD, SCARBOROUGH, MAINE 04074
tel 207.883.1000 fax 207.883.1001
e-mail / website
info@northeastcivilsolutions.com
www.northeastcivilsolutions.com

E:\LAND PROJECT\41000\41041-WAGNER-PORTLAND\PLANSET\41041-DETAILS.DWG

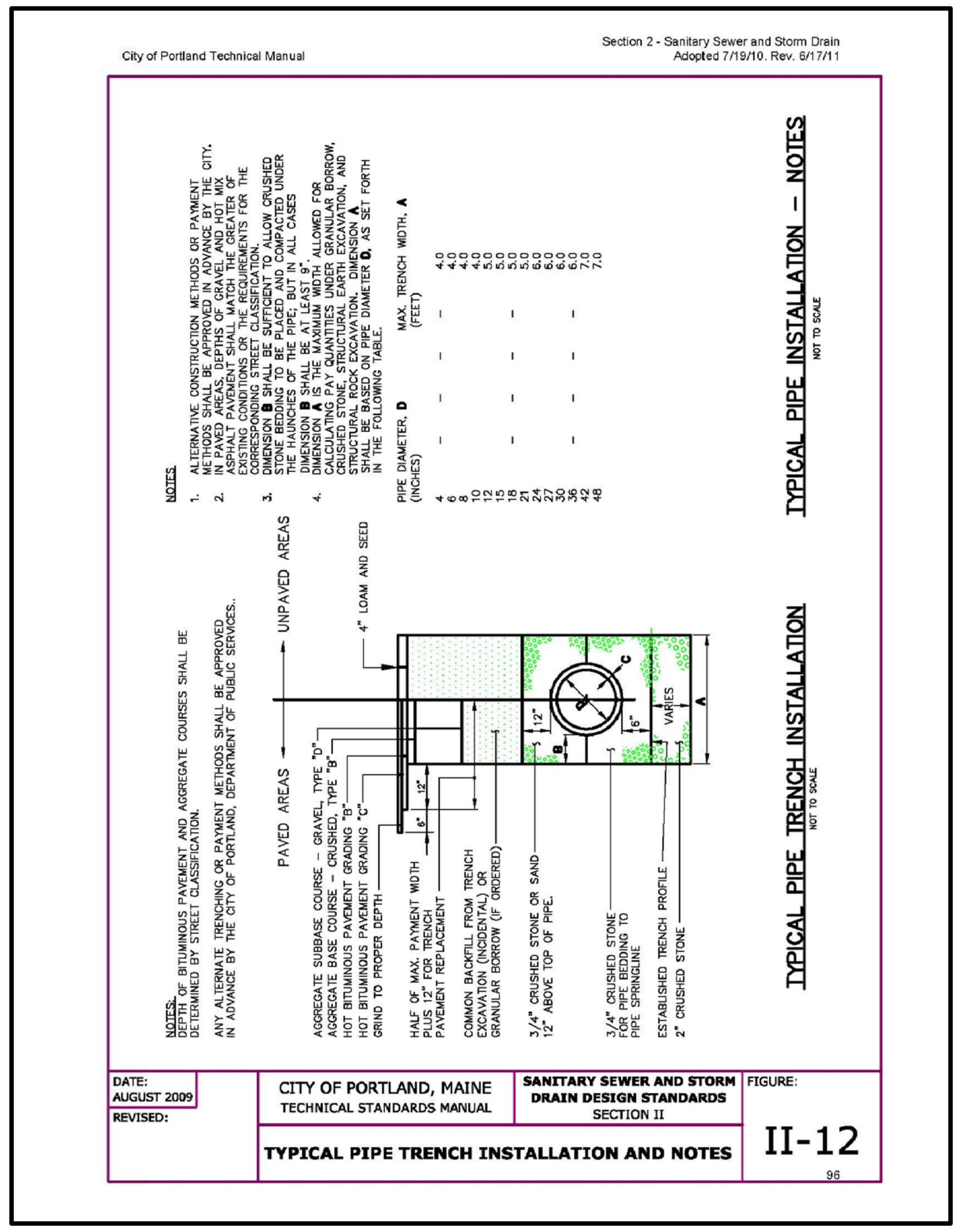

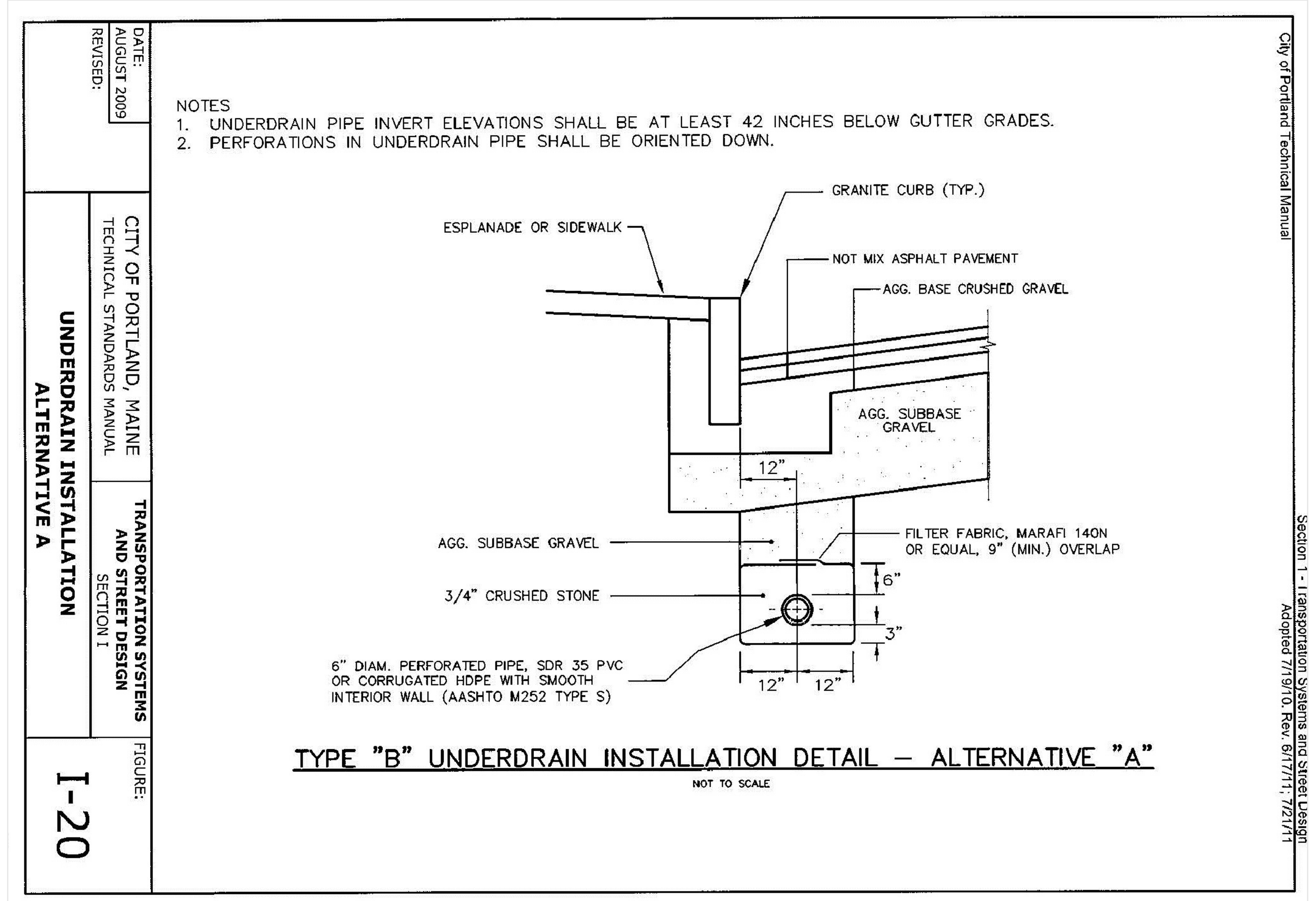

PAVEMENT MARKING NOTES :

1. ALL PAVEMENT MARKING WORDS AND SYMBOLS SHALL BE RETROREFLECTIVE WHITE AND SHALL CONFORM TO THE **MUTCD** AND MDOT ITEM 627.
2. WORDS AND SYMBOLS SHALL BE CENTERED LATERALLY WITHIN THE LANE. THE LONGITUDINAL DIMENSION SHALL BE PARALLEL TO THE LANE.
3. MULTI–WORD MESSAGES SHALL READ "UP"; THAT IS, THE FIRST WORD SHALL BE NEAREST THE APPROACHING DRIVER.
4. THE WORD "ONLY" SHALL NOT BE USED WITH THROUGH OR COMBINATION ARROWS, AND SHALL NOT BE USED ADJACENT TO A BROKEN LANE LINE. A TURN ARROW SHALL PRECEDE THE WORD "ONLY".
5. COMBINATION ARROWS MAY BE COMPRISED OF 2 SINGLE ARROWS (e.g. TURN AND THROUGH ARROWS). HOWEVER, THE SHAFTS OF THE ARROWS SHALL COINCIDE.
6. PREFORMED TAPE WORDS AND SYMBOLS SHALL BE PRE–CUT, EITHER BY THE MANUFACTURER OR THE CONTRACTOR.
7. WRONG–WAY ARROWS SHALL NOT BE SUBSTITUTED FOR THROUGH ARROWS.
8. LONGITUDINAL SPACING BETWEEN SUCCESSIVE WORDS AND/OR SYMBOLS SHOULD BE AT LEAST 4 TIMES THE HEIGHT OF THE LARGEST CHARACTER.

PLANTING SCHEDULE

QUANTITY	BOTANICAL NAME	COMMON NAME	SIZE
14*	ACER RUBRUM 'RED SUNSET'*	RED SUNSET MAPLE*	6'–7'

*VARY SPECIES FROM 2014 CITY OF PORTLAND APPROVED TREE LIST (SEE NOTE #2 ON SITE PLAN)

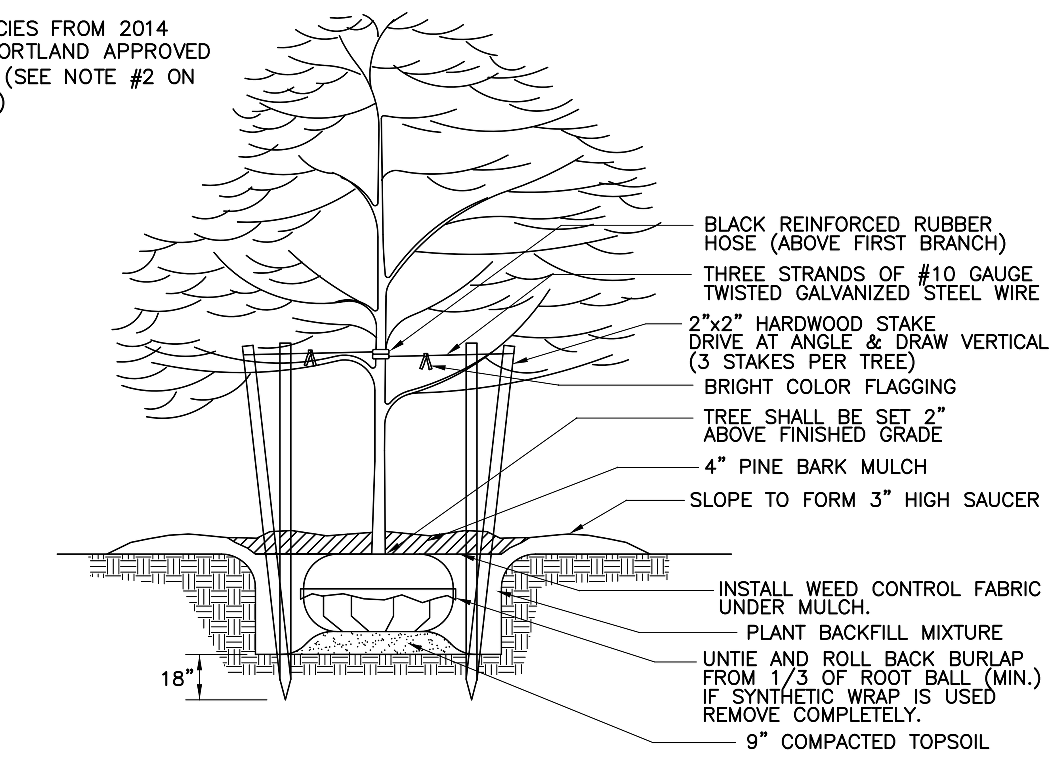

TYPICAL STREET TREE PLANTING

NOT TO SCALE

TRAFFIC SIGNS

IDENTIFICATION NUMBER	SIGN HEIGHT	SIGN WIDTH	POST PER SIGN	TEXT	NUMBER OF SIGNS REQ'D.	SIGN AREA SQ. FT. NOM. AREA	SIGN AREA SQ. FT. TOTAL AREA	REMARKS
R1–1	30"	30"	1	STOP	1	6.25	6.25	PER MUTCD

NOTE: ALL SIGNS SHALL CONFORM TO MUTCD STANDARDS

PRECAST CONCRETE PRODUCTS OF MAINE, INC. PHONE (207) 729–1628 FAX (207) 729–8710

CMP RESIDENTIAL TRANSFORMER PAD (25 – 167 KVA)

ITEM #B–1
WEIGHT – 3,160 LBS

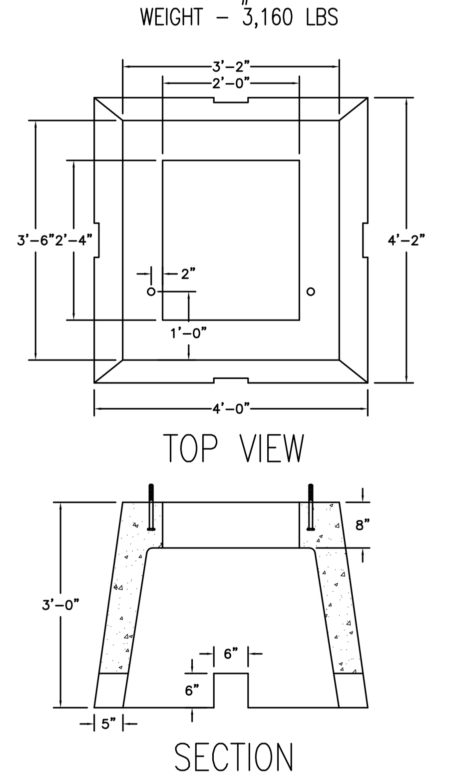

DESIGN NOTES:

1 – CONCRETE 4000 PSI AT 28 DAYS.
2 – REINFORCING 4X4 W.W.M.
3 – (2) – 5/8" DIA X 8" LONG BOLTS

NOTES:

1. STAND OFF BRACKETS ARE REQUIRED WHEN MORE THAN ONE CONDUIT PER UTILITY IS TO BE INSTALLED ON A POLE.
2. ALL THREE PHASE PRIMARY RISERS, WHETHER STAND OFF BRACKETS ARE USED OR NOT, SHALL BE RIGID STEEL FOR THE FIRST SECTION.
3. ON SINGLE PHASE PRIMARY, SECONDARY AND SERVICE URD RISERS USING STAND OFF BRACKETS, RIGID STEEL OR SCHEDULE 80 MAY BE USED.
4. WHERE RIGID STEEL OR SCHEDULE 80 PVC IS USED FOR THE RISER, ONE BRACKET SHALL BE USED TO SUPPORT EACH SECTION OF CONDUIT UP TO 10 FEET IN LENGTH. EACH BRACKET IS TO BE PLACED JUST BELOW THE RISER CONDUIT COUPLING.
5. CONDUIT SECTIONS FOR A SINGLE PHASE OR THREE PHASE RISERS USING STAND OFF BRACKETS SHALL BE RIGID STEEL OR SCHEDULE 80 PVC CONDUIT ONLY (SEE NOTE #2), WITH THE EXCEPTION THAT SCHEDULE 40 PVC SUNLIGHT RESISTANT CONDUIT MAY BE USED FOR THE TOP SECTION OF THE RISER (NOT LONGER THAN 10'). IF TOP SECTION IS LONGER THAN 24" IT MUST BE SUPPORTED WITH A MINIMUM OF ONE STAND OFF BRACKET. IF TOP SECTION IS SCHEDULE 40 PVC AND LONGER THAN 72" IT MUST BE SUPPORTED BY NO FEWER THAN TWO STAND OFF BRACKETS.
6. WHERE PVC IS USED FOR THE RISER, EACH STAND OFF BRACKET SUPPORTING THE PVC SHALL BE GROUNDED. WHERE STEEL IS USED FOR THE RISER ONE STAND OFF BRACKET SUPPORTING THE STEEL IS REQUIRED TO BE GROUNDED.
7. SWEEPS, WHEN USED, ARE REQUIRED TO BE STEEL.
8. IF RISER IS ALL STEEL CONDUIT, INSTALL INSULATED GROUNDING BUSHING AT TOP OF RISER.
9. LOWEST BRACKET SHALL BE A MINIMUM OF 8 FEET ABOVE FINISHED GRADE.
10. ALTERNATE LOCATION FOR COMMUNICATION CABLE IF RUN IN METAL CONDUIT OR SCHEDULE 80.
11. COMMUNICATION CABLE MAY BE ATTACHED DIRECTLY TO POLE ADJACENT TO BRACKETS.

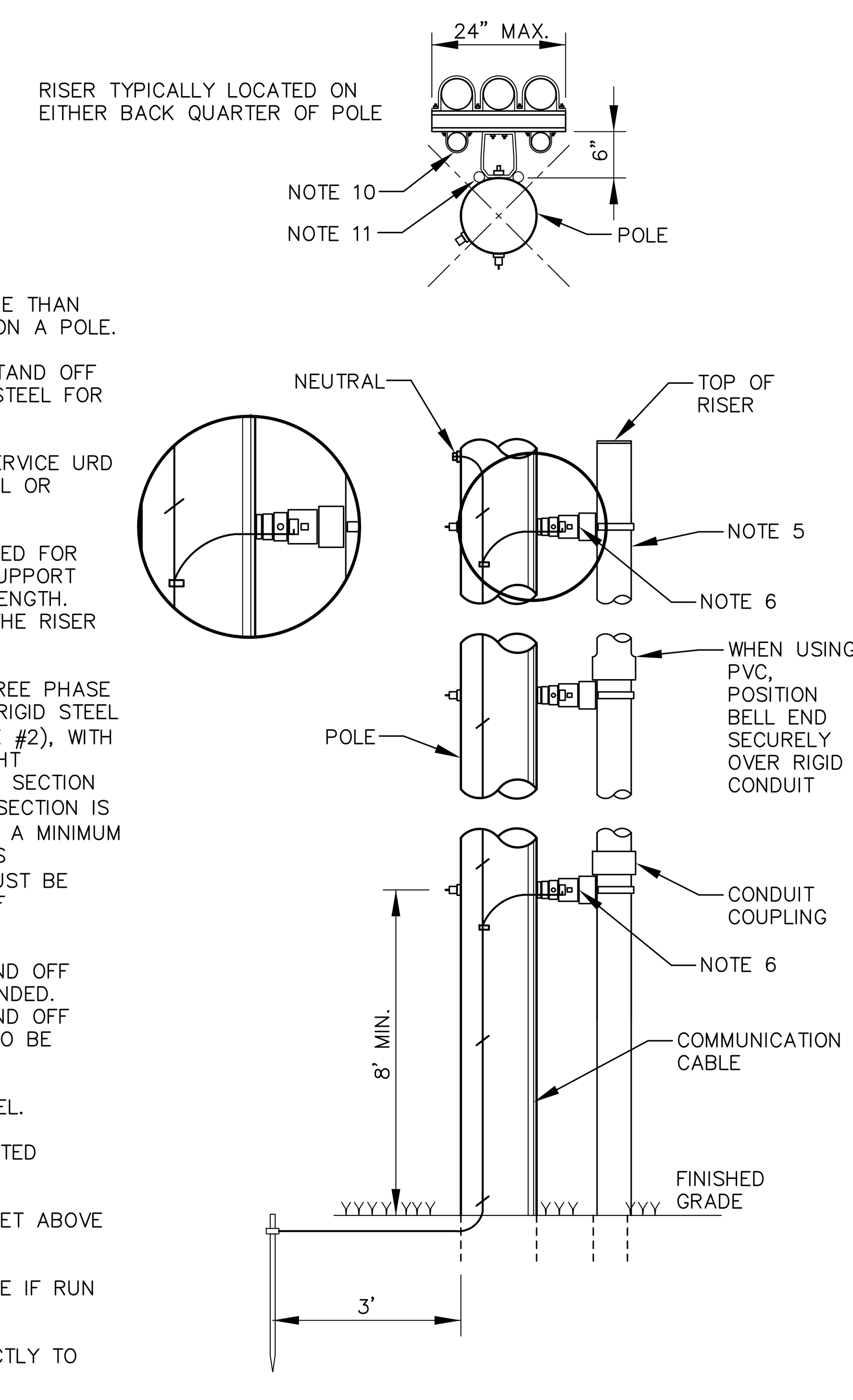

TYPICAL RISER DETAIL

NOT TO SCALE

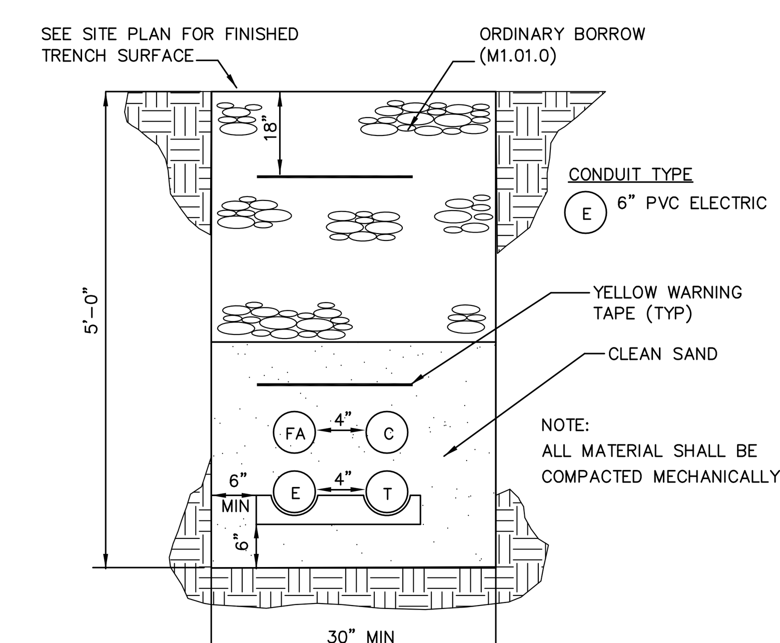

ALL TRENCH CONDUITS SHALL BE SCHEDULE 40 PVC, UNLESS OTHERWISE NOTED

COMMON TRENCH DETAIL
ELECTRIC/TELEPHONE/FIRE ALARM/CABLE

NOT TO SCALE

THIS PLAN IS FOR REVIEW PURPOSES ONLY AND IS NOT INTENDED FOR CONSTRUCTION OR RECORDING

Revision:	By:	Date:	Change:
3	SMA	9/7/18	SUBMITTED FOR FINAL SITE PLAN/SUBDIVISION REVIEW
2	SMA	5/11/18	SUBMITTED FOR PRELIMINARY SITE PLAN/SUBDIVISION REVIEW
1	SMA	5/4/18	SUBMITTED FOR MDEP TIER 1 REVIEW

PROJECT NUMBER: 41041 | ACAD FILE: 41041–DETAILS.DWG | SCALE: AS NOTED | DATE: MAY 1, 2018

Drawing Name:
CONSTRUCTION DETAILS – SHEET 4

Project Name and Location:
PROPOSED CAPISIC MEADOWS SUBDIVISION
130 BANCROFT STREET, PORTLAND, MAINE 04102

Prepared For:
WB GROUP, INC
130 BANCROFT STREET, PORTLAND, MAINE 04102

STATE OF MAINE ★ ANTHONY P. PANCIOCCO JR. No. 10941 ★ LICENSED PROFESSIONAL ENGINEER
9-7-18

SHEET 12 OF 15

SURVEYING • ENGINEERING • LAND PLANNING
Northeast Civil Solutions
INCORPORATED
381 PAYNE ROAD, SCARBOROUGH, MAINE 04074
tel 207.883.1000 fax 207.883.1001 e–mail / website info@northeastcivilsolutions.com www.northeastcivilsolutions.com

E:\LAND PROJECT\41000\41041–WAGNER–PORTLAND\PLANSET\41041–DETAILS.DWG

NOTES:

1. TRENCHES LOCATED ON THE ROAD SHOULDER SHALL BE TREATED THE SAME AS STREET EXCEPT FOR PAVING
2. SATISFACTORY EXCAVATED MATERIAL CAN BE USED FOR BACKFILL ABOVE THE LINE OF NARROW TRENCH LIMIT.

TRENCH WIDTH Ws OR Wu		
DIAMETER OF PIPE D	Wu UNSHEETED	Ws SHEETED
12" AND SMALLER	3'-0"	4'-2"
15"	3'-2"	4'-4"
18"	3'-6"	4'-8"
21"	3'-10"	5'-0"
24"	4'-2"	5'-4"
27"	4'-6"	5'-8"
30"	4'-10"	6'-0"
36"	5'-6"	6'-8"
42"	6'-2"	7'-4"
48"	6'-10"	8'-0"

TRENCH WIDTH DATA

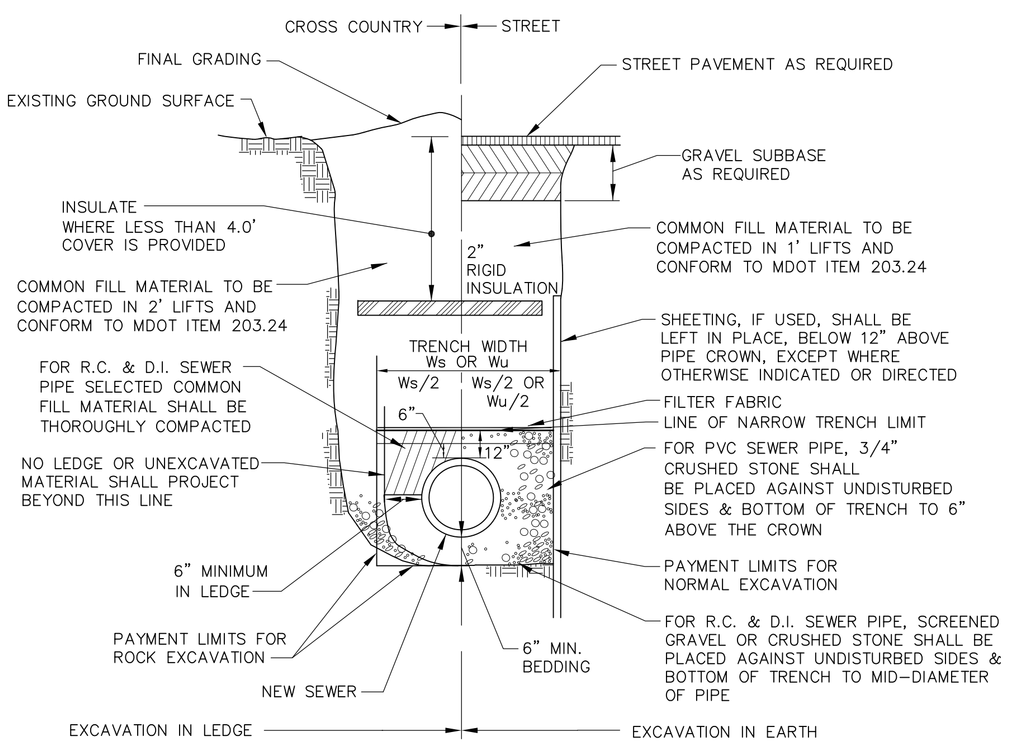

SEWER TRENCH SECTION

N. T. S.

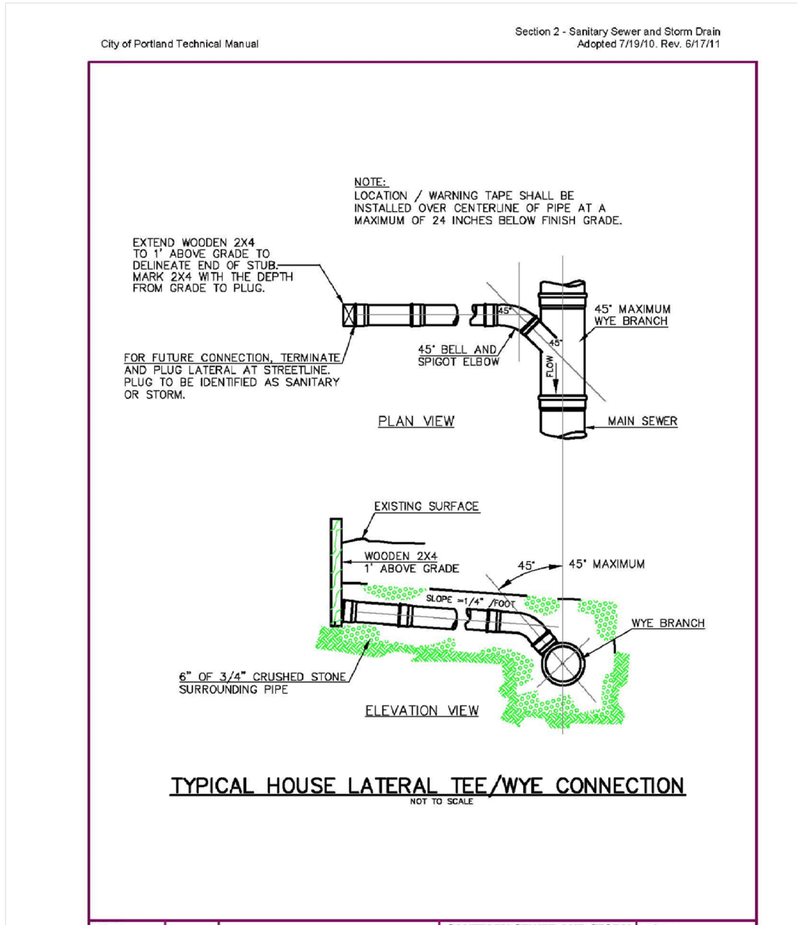

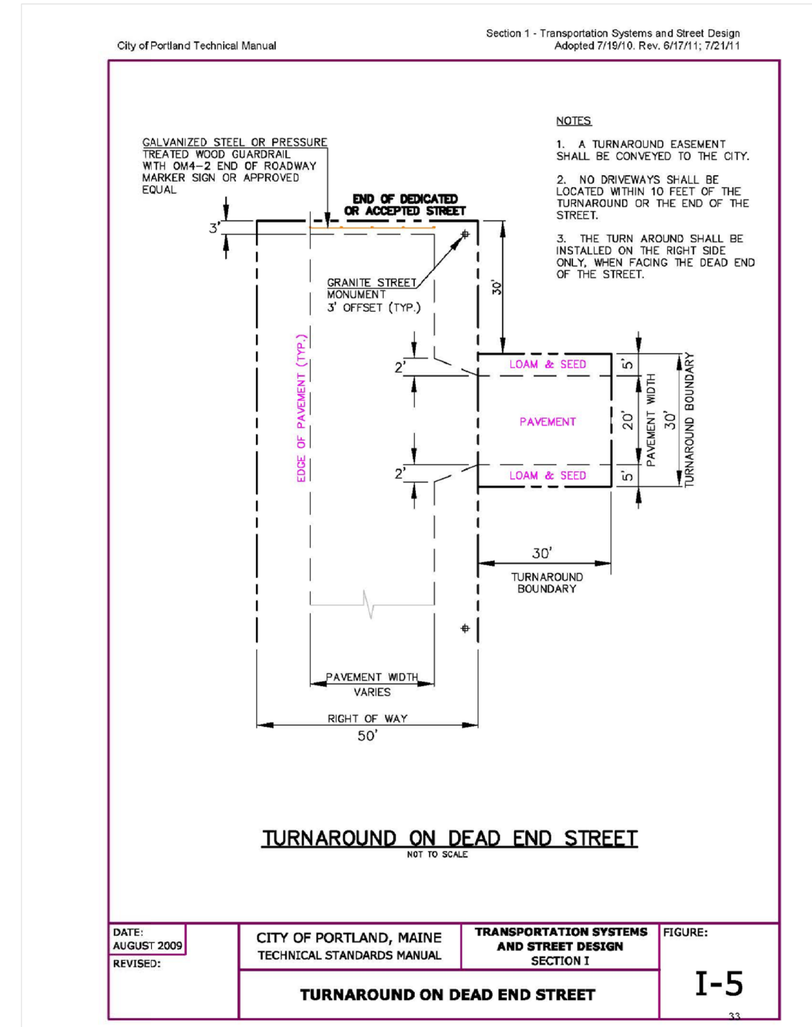

UNDERGROUND GAS PIPING INSTALLATION NOTE:

COVER DEPTH – SHOULD BE INSTALLED AT LEAST 18" OF COVER. CAN BE 12" IN AREAS WHERE EXTERNAL DAMAGE IS NOT LIKELY. IF LESS THAN 12", PROVIDE A PROTECTIVE CONDUIT OR BRIDGING. ALWAYS USE WARNING TAPE AND TRACER WIRE FIR PLASTIC PIPING.

BACK FILLING TRENCHES – PIPE SHOULD HAVE A FIRM, CONTINUOUS BEARING ON TRENCH BOTTOM. WHEN INSTALLING GAS PIPING, ESPECIALLY PLASTIC, IN A FLOODED TRENCH, CARE SHOULD BE TAKEN TO PREVENT THE PIPE FROM FLOATING UP IN THE TRENCH DURING BACK FILLING OPERATIONS.

COORDINATE ALL INSTALLATIONS WITH UNITIL.

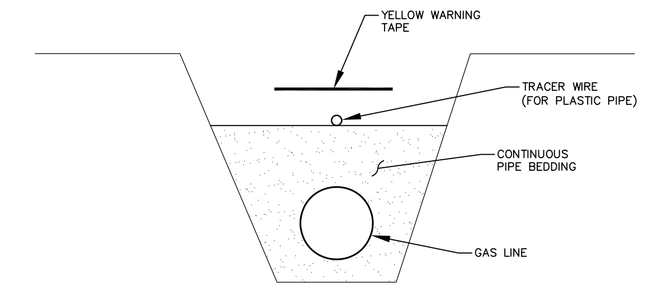

GAS LINE TRENCH DETAIL

NOT TO SCALE

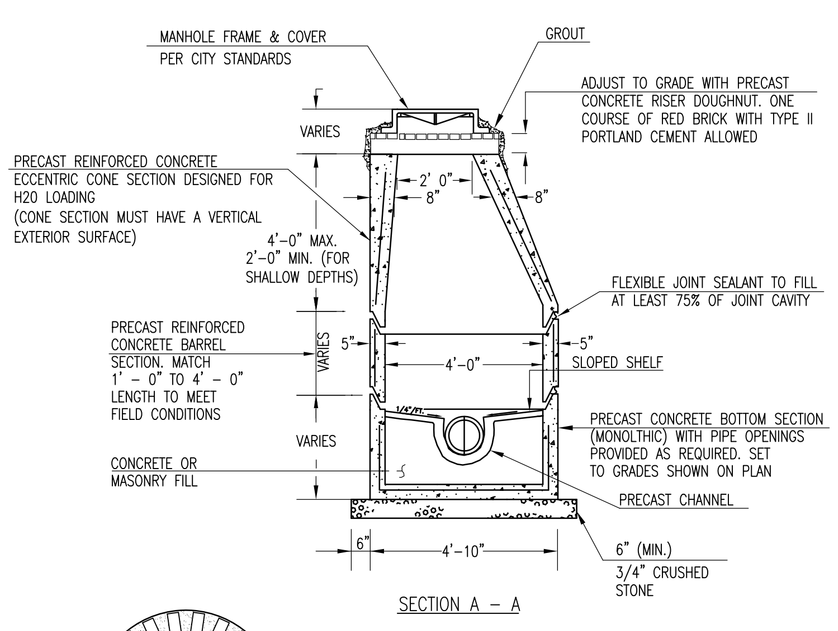

SECTION A – A

NOTE:

1. ALIGNMENT, TO BE BUILT ON SMOOTH RADIUS. CHANNEL TO BE SHAPED TO ACCEPT ADDITIONAL INLET PIPES.
2. MANHOLE FRAME & COVER "CASCADE TYPE" GRATE PER MDOT STANDARD
3. PROVIDE 2' LONG (MAX.) STUBS FOR ALL PIPES ENTERING OR LEAVING SEWER MANHOLES
4. THE MANHOLES SHALL BE VACUUM TESTED AND THE SEWER PIPELINE TESTED USING A LOW PRESSURE AIR TEST IN ACCORDANCE WITH TOWN SPECIFICATIONS.
5. FOR SHALLOW MANHOLES, A 2' CONE MAY BE USED.
6. FLEXIBLE RUBBER BOOT OR APPROVED EQUAL SHALL BE EQUIPPED WITH A MINIMUM OF 2 STAINLESS STEEL BANDS

NOTE:

ALL SEWER PIPES SHALL BE INSTALLED WITH THE BELLS UPGRADIENT.

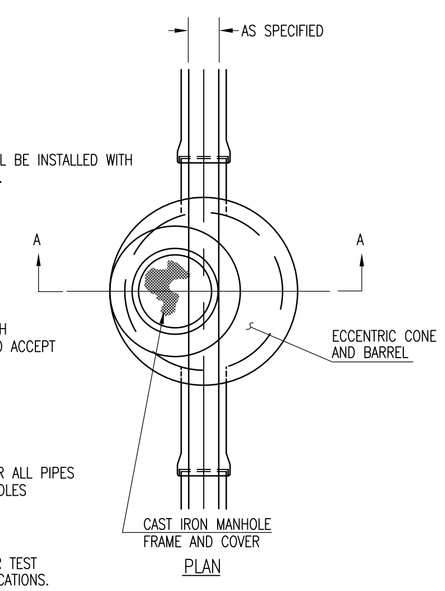

PLAN

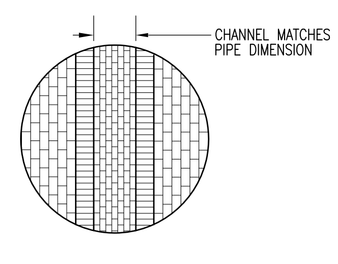

SHELF DETAIL

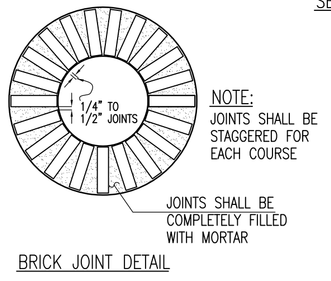

NOTE:
JOINTS SHALL BE STAGGERED FOR EACH COURSE

BRICK JOINT DETAIL

CATCH BASIN/DRAIN MANHOLE DIMENSIONAL REQUIREMENTS		
I.D.	WALL WIDTH	FLOOR THICKNESS
4'-0"	5"	6"
5'-0"	6"	6"
6'-0"	7"	6"
8'-0"	8"	8"
10'-0"	10"	9"

NOTE:
MANHOLE, FRAME AND COVER SHALL BE DESIGNED TO WITHSTAND HS-20 LOADING.

PRECAST CONCRETE SEWER MANHOLE TYPE "A"

NOT TO SCALE

G E N E R A L N O T E S

1. LOCATIONS OF UTILITIES ARE APPROXIMATE.
2. IT SHALL BE THE CONTRACTOR'S RESPONSIBILITY TO HAVE ALL THE UTILITIES LOCATE THEIR SERVICES PRIOR TO THE START OF CONSTRUCTION.
3. ALL EXISTING CATCH BASINS, MANHOLES, CONNECTIONS, AND OUTLET PIPING SHALL BE CLEANED AND LEFT IN SATISFACTORY OPERATING CONDITION AFTER CONSTRUCTION HAS BEEN COMPLETED. NO SEPARATE PAYMENT WILL BE MADE FOR THIS WORK.
4. ALL MANHOLE FRAMES SHALL BE SUPPLIED WITH SOLID MANHOLE COVERS; SEE STANDARD DETAIL.
5. ALL GRANITE CATCH BASIN STONES, MANHOLE FRAMES AND COVERS TO BE REMOVED SHALL BE REUSED AS DIRECTED BY THE PROJECT ENGINEER. NO SEPARATE PAYMENT WILL BE MADE FOR THIS WORK.
6. ALL TERMINAL MANHOLES SHALL HAVE CHANNELS CONSTRUCTED STRAIGHT THROUGH THE MANHOLE.

GENERAL NOTES FOR SEWER PIPES, MANHOLES AND CATCH BASINS

1. ALL CONCRETE SHALL BE CLASS "A" AND HAVE A MINIMUM ULTIMATE COMPRESSIVE STRENGTH OF 4000 lbs. PER SQ. INCH AT THE END OF 28 DAYS, UNLESS OTHERWISE NOTED.
2. PRECAST REINFORCED CONE BARREL MANUFACTURED PER ASTM SPEC. C-478-67
3. SEWER BRICK SHALL CONFORM TO ASTM SPEC. DESIGNATE ON C-32-63, GRADE MA AND SA.
4. ALL MANHOLES SHALL HAVE A BITUMINOUS WATERPROOFING APPLIED TO THE EXTERIOR SURFACE.
5. CASTINGS SHALL CONFORM TO ASTM DESIGNATION A48-CLASS 35. ALL PARTS OF CASTINGS, EXCEPT FINISHED SURFACE, SHALL RECEIVE A COAT OF COAL TAR PITCH VARNISH OR ASPHALTUM PAINT WHICH SHALL BE SMOOTH AND TOUGH BUT NOT BRITTLE.
6. MANHOLES TO BE CONSTRUCTED OF PRECAST REINFORCED CONCRETE.
7. ALL PRECAST MANHOLES AND CATCH BASINS SHALL BE IDENTIFIED BY LABLE, PAINTED ON THE SIDE OF THE STRUCTURE BY THE MANUFACTURER.
8. STORM MANHOLES SHALL HAVE CAST IRON COVERS WITH ONE DRILLED PICK HOLE. 26"ø NEENAH COVER OR APPROVED EQUAL. NO HOLES ARE ALLOWED IN SEWER MANHOLE COVERS
9. ALL SEWER PIPES USED SHALL BE SDR-35, MEETING THE REQUIREMENTS OF ASTM 3034. PIPES SHALL HAVE GASKETS AND BE INSTALLED WITH BELLS UPHILL.
10. THE RUBBER BOOT FOR THE SEWER PIPE PENETRATIONS INTO THE MANHOLES SHALL HAVE AT LEAST 2 STAINLESS STEEL CLAMPS.

THIS PLAN IS FOR REVIEW PURPOSES ONLY AND IS NOT INTENDED FOR CONSTRUCTION OR RECORDING

Revision:	By:	Date:	Change:
3	SMA	9/7/18	SUBMITTED FOR FINAL SITE PLAN/SUBDIVISION REVIEW
2	SMA	5/11/18	SUBMITTED FOR PRELIMINARY SITE PLAN/SUBDIVISION REVIEW
1	SMA	5/4/18	SUBMITTED FOR MDEP TIER 1 REVIEW

PROJECT NUMBER: 41041 | ACAD FILE: 41041-DETAILS.DWG | SCALE: AS NOTED | DATE: MAY 1, 2018

Drawing Name:
CONSTRUCTION DETAILS – SHEET 5

Project Name and Location:
PROPOSED CAPISIC MEADOWS SUBDIVISION
130 BANCROFT STREET, PORTLAND, MAINE 04102

Prepared For:
WB GROUP, INC
130 BANCROFT STREET, PORTLAND, MAINE 04102

STATE OF MAINE ANTHONY P. PANCIOCCO JR. No. 10941 LICENSED PROFESSIONAL ENGINEER
9-7-18

SURVEYING • ENGINEERING • LAND PLANNING
Northeast Civil Solutions
INCORPORATED
381 PAYNE ROAD, SCARBOROUGH, MAINE 04074
tel 207.883.1000 fax 207.883.1001 e-mail / website info@northeastcivilsolutions.com www.northeastcivilsolutions.com

E:\LAND PROJECT\41000\41041-WAGNER-PORTLAND\CAD\SET\41041-DETAILS.DWG

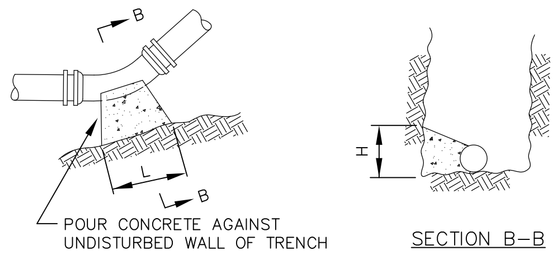

BEARING AREAS – SQUARE FEET					
NOMINAL DIAMETER OF FITTING	FITTING				
	DEAD END	BRANCH OF TEE	90° BEND	45° BEND	BEND SMALLER THAN 45° GREATER THAN 10°
6"	2	2	3	2	2
8"	4	4	5	3	2
10"	6	6	8	4	2
12"	8	8	10	6	3
14"	12	12	16	9	4
16"	12	12	20	10	5

NOTES
1. ALL BENDS, TEE HYDRANTS AND DEAD ENDS SHALL BE BRACED WITH CONCRETE THRUST BLOCKS.
2. BEARING AREA IS AREA OF CONCRETE IN CONTACT WITH WALL OF TRENCH=HxL.
3. HEIGHT (H) AND LENGTH (L) AS REQUIRED TO OBTAIN BEARING AREA IN TABLE.

THRUST BLOCK DETAILS
NOT TO SCALE

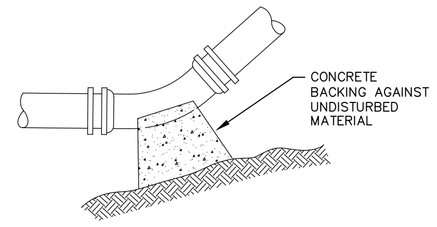

TYPICAL BEND
NOT TO SCALE

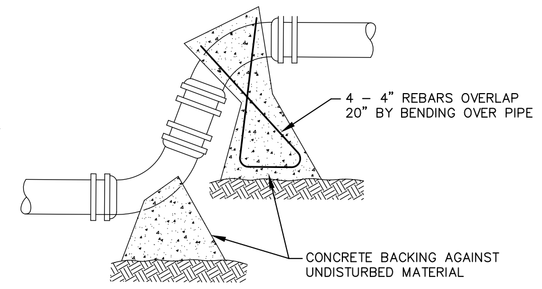

TYPICAL OFF–SET
NOT TO SCALE

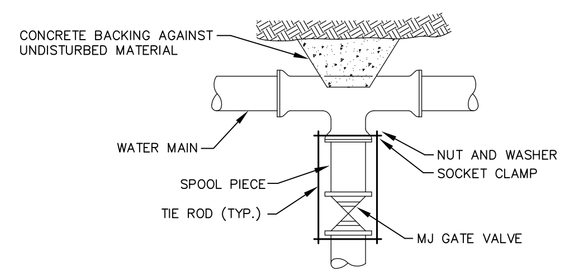

TYPICAL VALVE CONNECTION
RESTRAINED JOINT TEE
NOT TO SCALE

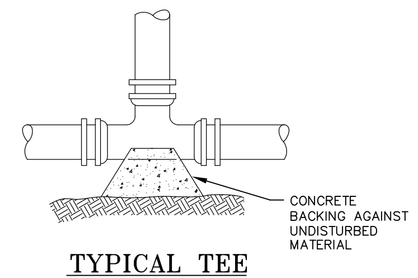

TYPICAL TEE
NOT TO SCALE

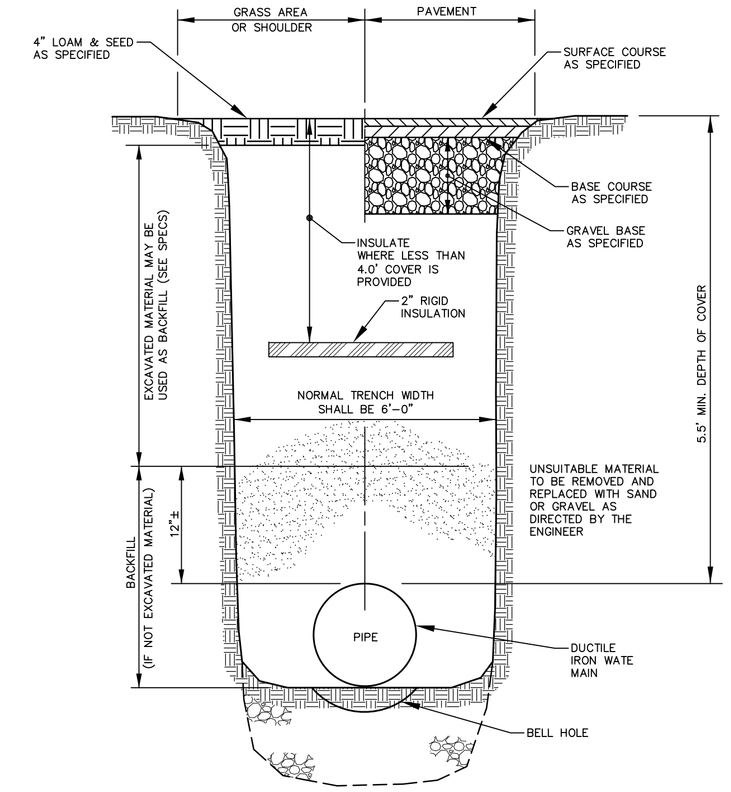

SECTION THRU EARTH TRENCH
NOT TO SCALE

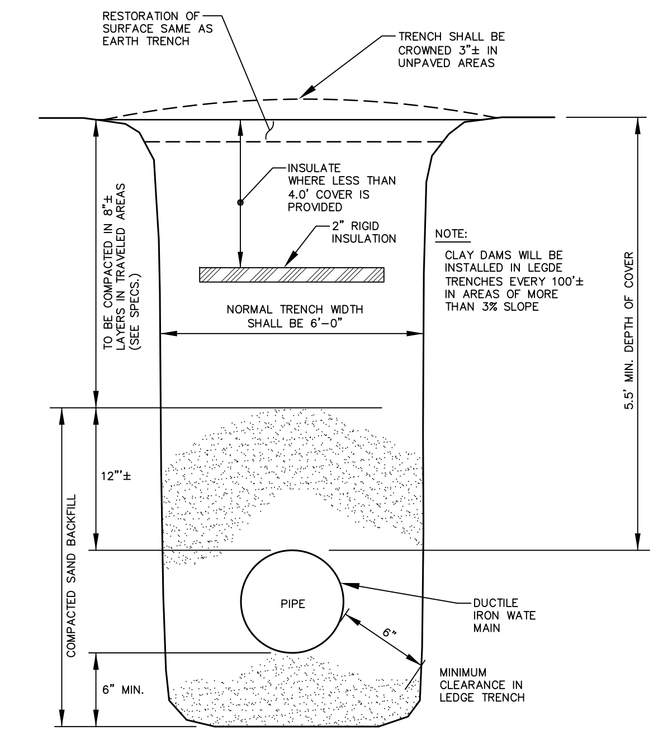

SECTION THRU LEDGE TRENCH
NOT TO SCALE

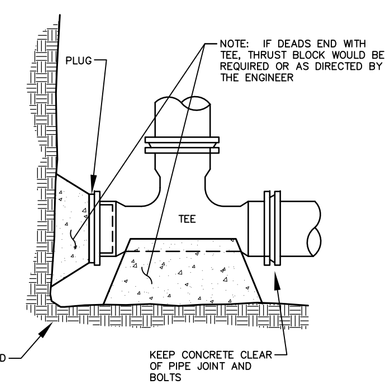

STANDARD TEE BLOCKING
NOT TO SCALE

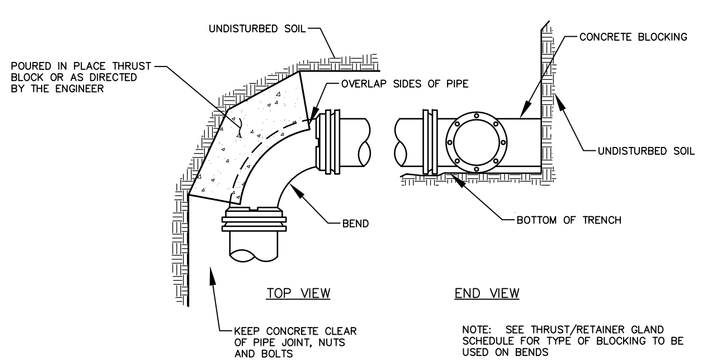

STANDARD BEND BLOCKING
NOT TO SCALE

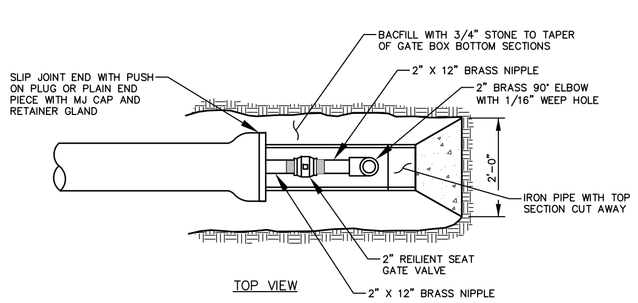

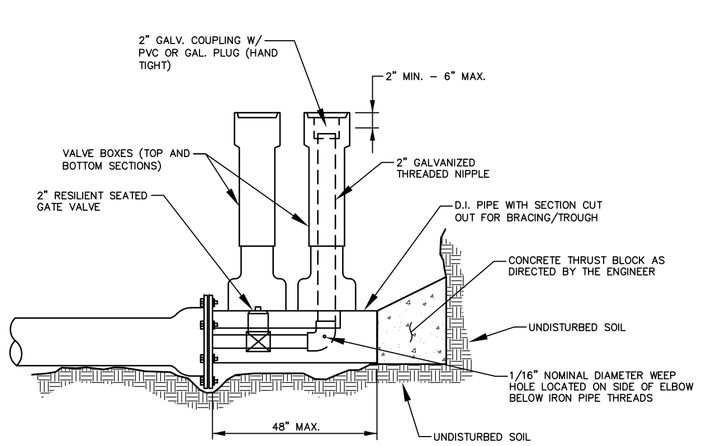

STANDARD 2" BLOW OFF
NOT TO SCALE

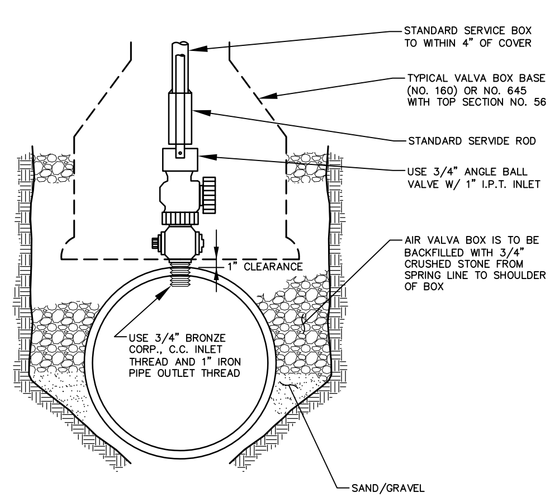

TYPICAL AIR VALVE (1")
NOT TO SCALE

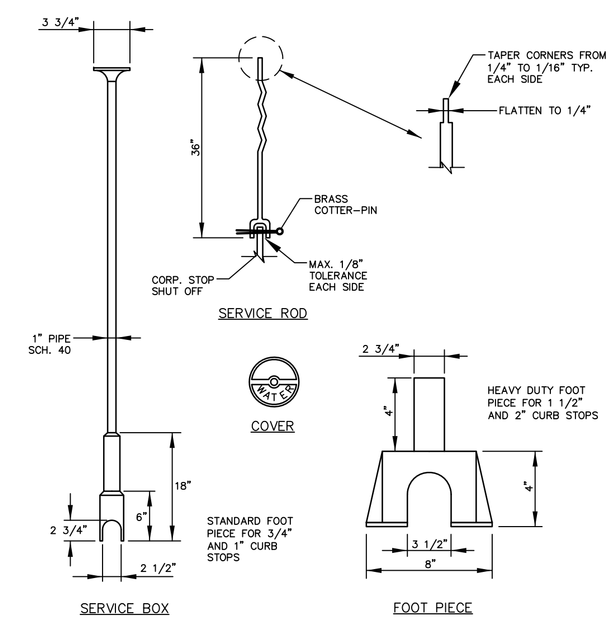

NOTE: ANY EXTENSION OF SERVICE BOX REQUIRES A COUPLING & 1" THREADED PIPE

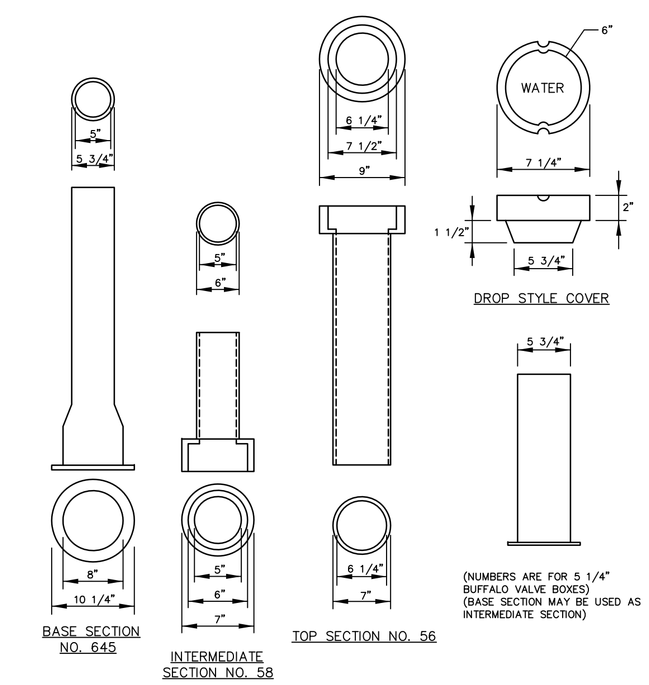

VALVE BOX & COVER
NOT TO SCALE

ALL WATER LINE WORK TO MEET PORTLAND WATER DISTRICT STANDARDS

THIS PLAN IS FOR REVIEW PURPOSES ONLY AND IS NOT INTENDED FOR CONSTRUCTION OR RECORDING

Revision:	By:	Date:	Change:
3	SMA	9/7/18	SUBMITTED FOR FINAL SITE PLAN/SUBDIVISION REVIEW
2	SMA	5/11/18	SUBMITTED FOR PRELIMINARY SITE PLAN/SUBDIVISION REVIEW
1	SMA	5/4/18	SUBMITTED FOR MDEP TIER 1 REVIEW

PROJECT NUMBER: 41041 | ACAD FILE: 41041–DETAILS.DWG | SCALE: AS NOTED | DATE: MAY 1, 2018

Drawing Name:
CONSTRUCTION DETAILS – SHEET 6

Project Name and Location:
PROPOSED CAPISIC MEADOWS SUBDIVISION
130 BANCROFT STREET, PORTLAND, MAINE 04102

Prepared For:
WB GROUP, INC
130 BANCROFT STREET, PORTLAND, MAINE 04102

STATE OF MAINE ANTHONY P. PANCIOCCO JR. No. 10941 LICENSED PROFESSIONAL ENGINEER
9-7-18

SHEET 14 OF 15

SURVEYING • ENGINEERING • LAND PLANNING
Northeast Civil Solutions
INCORPORATED
381 PAYNE ROAD, SCARBOROUGH, MAINE 04074
tel 207.883.1000 fax 207.883.1001
e-mail / website
info@northeastcivilsolutions.com
www.northeastcivilsolutions.com

E:\LAND PROJECT\41000\41041-WAGNER-PORTLAND\PLANSET\41041-DETAILS.DWG

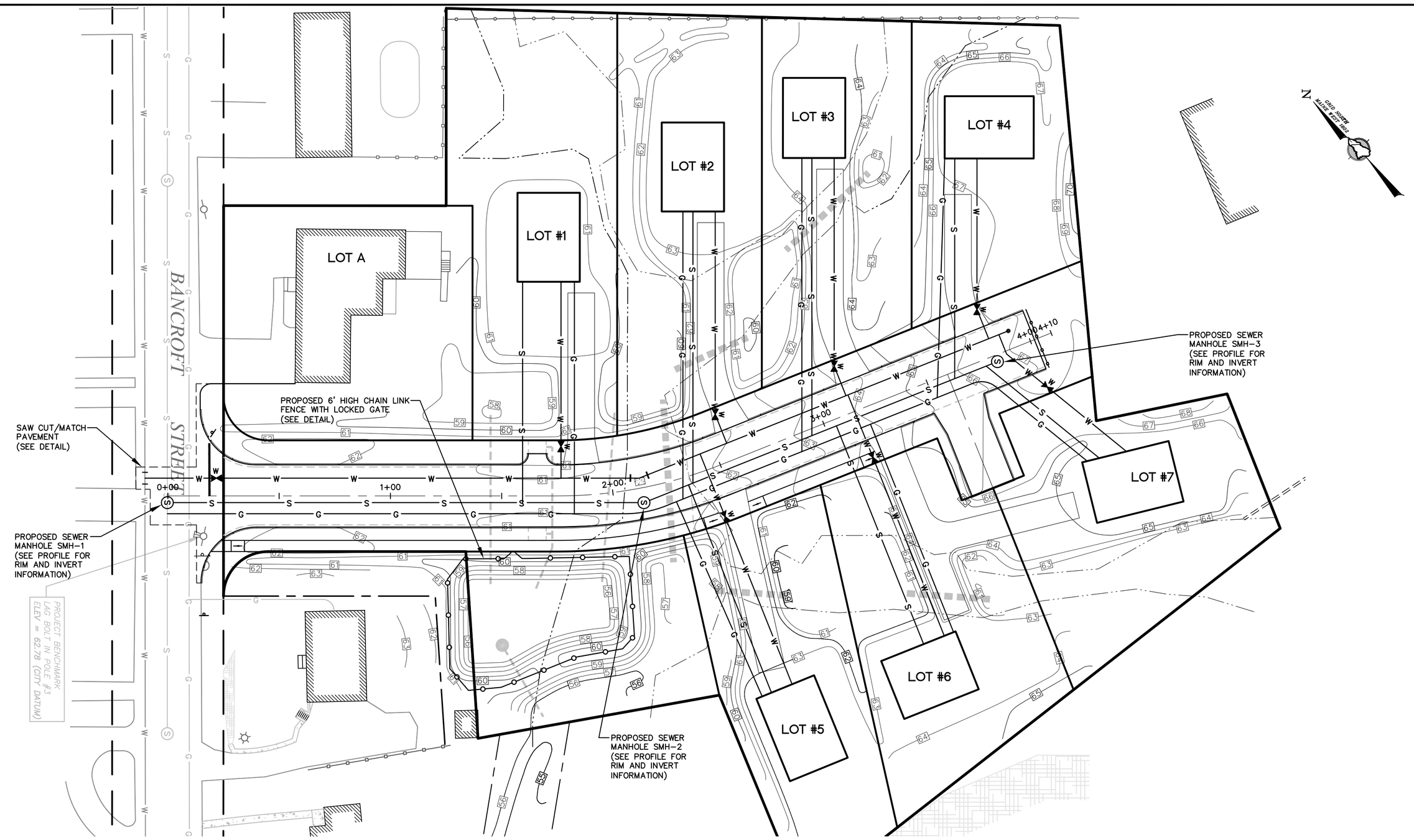

BENJAMIN WAY PLAN VIEW

SCALE: 1" = 30'

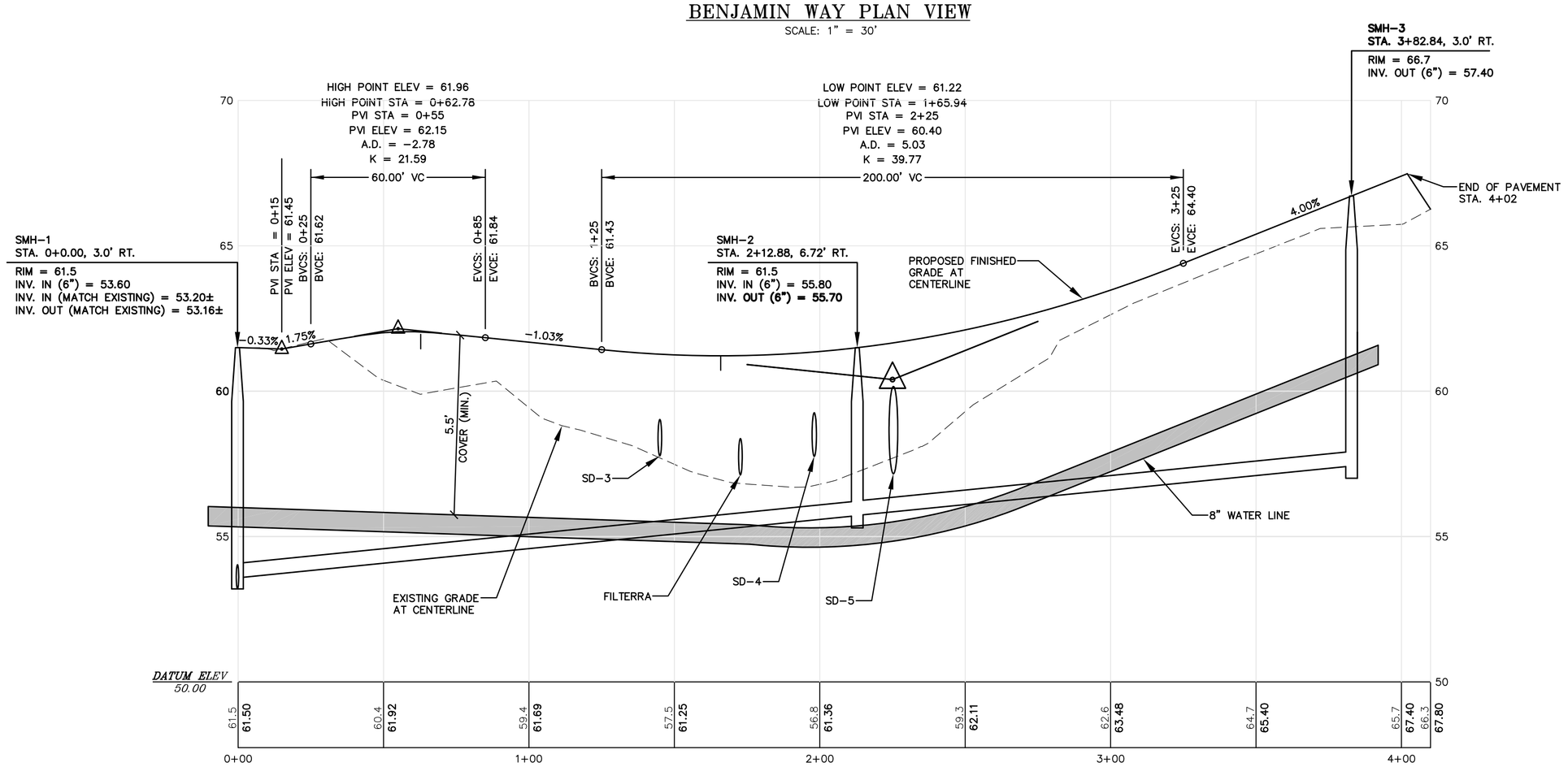

BENJAMIN WAY PROFILE

HORIZONTAL SCALE 1" = 30' 0 30' 60' 120'

VERTICAL SCALE 1" = 3' 0 3' 6' 12'

THIS PLAN IS FOR REVIEW PURPOSES ONLY AND IS NOT INTENDED FOR CONSTRUCTION OR RECORDING

LEGEND

- BOUNDARY LINE
- EDGE OF PAVEMENT
- RIGHT-OF-WAY LINE
- ABUTTER
- EXISITNG EASEMENT
- BUILDING SETBACK
- EXISTING UTILITY POLE
- EXISTING OVERHEAD UTILITY
- EXISTING HYDRANT
- EXISTING HYDRANT
- EXISTING WATER LINE
- EXISTING SEWER MANHOLE
- EXISTING WATER LINE
- EXISTING TREE
- EXISTING TREE LINE
- WETLAND
- PROPOSED WATER LINE
- PROPOSED SEWER LINE
- PROPOSED DRAIN LINE
- PROPOSED GAS LINE
- PROPOSED OUTLET CONTROL STRUCTURE

CONSTRUCTION NOTES

1. ALL EXISTING UTILITY LOCATIONS SHOWN ARE APPROXIMATE AND HAVE BEEN DETERMINED BY SURFACE EVIDENCE AND/OR PREVIOUSLY GENERATED PLANS. NO GUARANTEE IS MADE THAT ALL UTILITIES ARE SHOWN OR WILL BE FOUND IN LOCATIONS INDICATED. THIS INFORMATION IS PROVIDED FOR REFERENCE AND THE CONTRACTOR SHALL VERIFY LOCATION OF ALL UTILITIES AND POINTS OF CONNECTION IN THE FIELD. CONTRACTOR SHALL BE RESPONSIBLE FOR REPAIR AND RESTORATION OF ALL UTILITIES DISTURBED DURING CONSTRUCTION AT NO EXTRA EXPENSE TO THE OWNER.
2. CONTRACTOR SHALL VISIT THE SITE AND FAMILIARIZE HIM OR HERSELF WITH ALL CONDITIONS AFFECTING THE PROPOSED WORK AND SHALL MAKE PROVISIONS AS TO THE COST THEREOF. CONTRACTOR SHALL BE RESPONSIBLE FOR FAMILIARIZING HIM OR HERSELF WITH ALL CONTRACT DOCUMENTS, FIELD CONDITIONS AND DIMENSIONS AND CONFORMING THAT THE WORK MAY BE ACCOMPLISHED AS SHOWN PRIOR TO PROCEEDING WITH CONSTRUCTION. ANY DISCREPANCIES SHALL BE BROUGHT TO THE ATTENTION OF THE ENGINEER PRIOR TO THE COMMENCEMENT OF WORK.
3. CONTRACTOR SHALL NOTIFY ENGINEER OF ALL PRODUCTS OR ITEMS NOTED AS "EXISTING" WHICH ARE NOT FOUND IN THE FIELD.
4. THE CONTRACTOR SHALL TAKE FULL RESPONSIBILITY FOR ANY CHANGES AND/OR DEVIATIONS OF APPROVED PLANS NOT AUTHORIZED BY THE ARCHITECT/ENGINEER AND/OR CLIENT/OWNER.
5. DETAILS ARE INTENDED TO SHOW END RESULT OF DESIGN. ANY MODIFICATION TO SUIT FIELD DIMENSIONS AND CONDITIONS SHALL BE SUBMITTED TO THE ENGINEER FOR REVIEW AND APPROVAL PRIOR TO ANY WORK.
6. ALL SUBSURFACE UTILITY LINES, SHOWN HEREON, ARE BASED SOLELY ON THE FIELD LOCATION OF VISIBLE STRUCTURES, SMH'S, CB'S, HYDRANTS, ETC. IN CONJUNCTION WITH DESIGN AND OR AS-BUILT PLANS SUPPLIED TO NORTHEAST CIVIL SOLUTIONS BY OTHERS. PRIOR TO ANY CONSTRUCTION, EXCAVATION, TEST BORINGS, DRILLING ETC. DIG SAFE MUST BE NOTIFIED AND A SITE IDENTIFICATION NUMBER, ALONG WITH A SAFE TO DIG DATE OBTAINED. THE SITE CONTRACTOR SHALL BE RESPONSIBLE FOR FIELD VERIFYING THE LOCATION, DEPTH AND MATERIAL OF ALL SUBSURFACE UTILITY LINES SHOWN HEREON, AND ON ANY AND ALL OTHERS LOCATED ON SITE WITHIN THE CONSTRUCTION AREA. CONTACT DIG-SAFE (888) DIG-SAFE PRIOR TO ANY EXCAVATION WORK.
7. COORDINATE ALL ELECTRICAL WORK WITH CENTRAL MAINE POWER PRIOR TO CONSTRUCTION.
8. ALL PAVEMENT MARKINGS AND PAINT STRIPING TO MEET THE STANDARDS OF THE LATEST EDITION OF THE MANUAL ON UNIFORM TRAFFIC CONTROL DEVICES (MUTCD).
9. ALL WATER LINE WORK SHALL MEET PORTLAND WATER DISTRICT STANDARDS (PWD). COORDINATE ALL WORK WITH THE DISTRICT PRIOR TO CONSTRUCTION.

Revision:	By:	Date:	Change:
3	SMA	9/7/18	SUBMITTED FOR FINAL SITE PLAN/SUBDIVISION REVIEW
2	SMA	5/11/18	SUBMITTED FOR PRELIMINARY SITE PLAN/SUBDIVISION REVIEW
1	SMA	5/4/18	SUBMITTED FOR MDEP TIER 1 REVIEW

PROJECT NUMBER: 41041 | ACAD FILE: 41041-P&P.DWG | SCALE: 1" = 30' | DATE: MAY 1, 2018

Drawing Name:
PLAN & PROFILE – BENJAMIN WAY

Project Name:
PROPOSED CAPISIC MEADOWS SUBDIVISION
130 BANCROFT STREET, PORTLAND, MAINE 04102

Owner/Applicant:
WB GROUP, INC
130 BANCROFT STREET, PORTLAND, MAINE 04102

STATE OF MAINE LICENSED PROFESSIONAL ENGINEER ANTHONY P. PANCIOCCO JR. No. 10941
9-7-18

SHEET 4 OF 15

SURVEYING • ENGINEERING • LAND PLANNING
Northeast Civil Solutions
INCORPORATED
381 PAYNE ROAD, SCARBOROUGH, MAINE 04074
tel 207.883.1000 fax 207.883.1001 e-mail / website info@northeastcivilsolutions.com www.northeastcivilsolutions.com

0 30' 60' 120'

E:\LAND PROJECTS\41000\41041-WAGNER-PORTLAND\PLANSET\41041-P&P.DWG

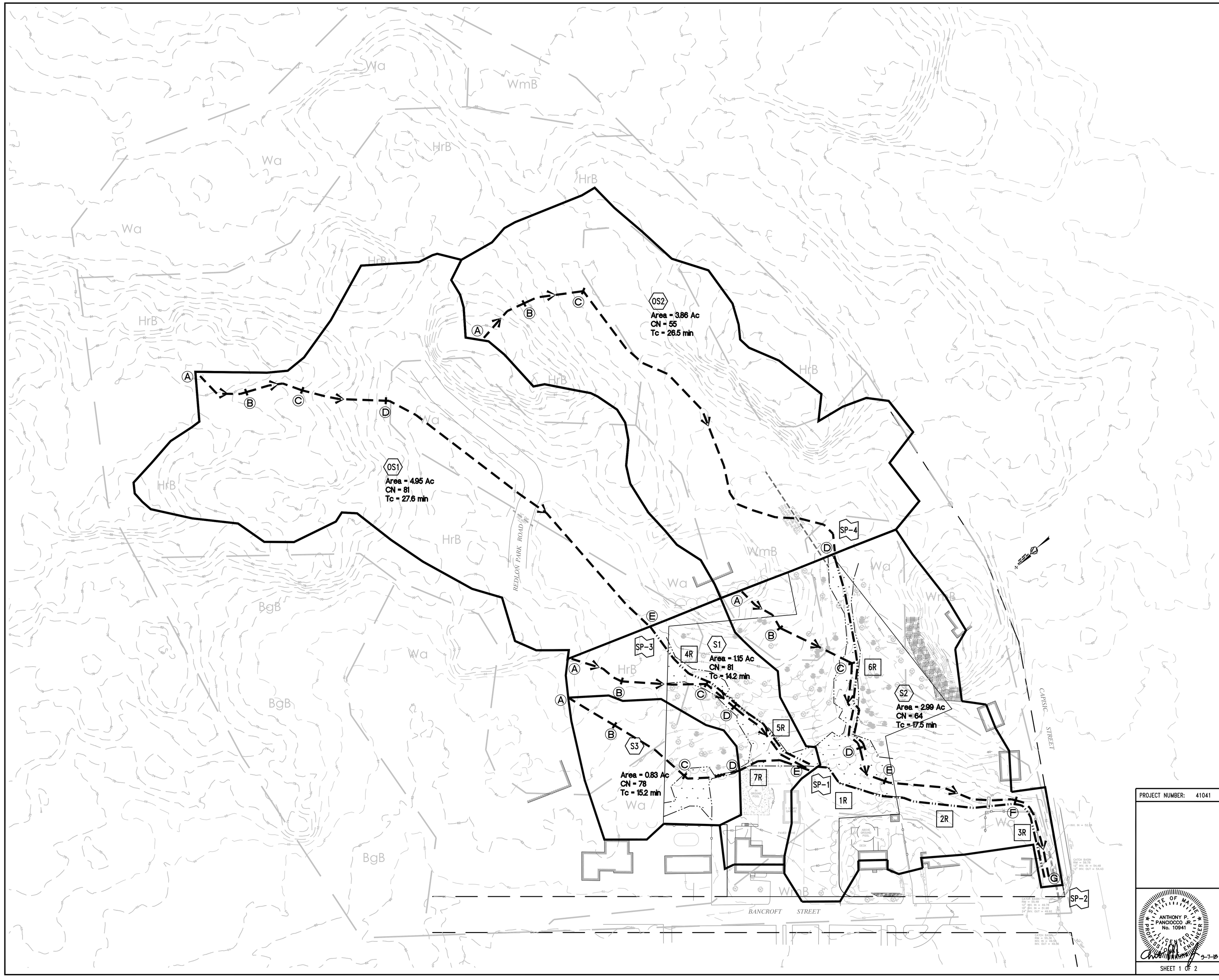

LEGEND

SP1	STUDY POINT
S1	SUBCATCHMENT
P1	POND
	PRE–DEVELOPMENT DRAINAGE SUBCATCHMENT
	TIME OF CONCENTRATION PATH
	SOIL BOUNDARY

SOILS LEGEND

SYMBOL	SOIL TYPE	HSG
HrB	HOLLIS FINE SANDY LOAM, 3%–8% SLOPES	D
Wa	WALPOLE FINE SANDY LOAM	A/D
WmB	WINDSOR LOAMY SAND, 0%–8% SLOPES	A

THE SOURCE OF THE SOIL TYPES AND BOUNDARIES IS THE NATIONAL COOPERATIVE SOIL SURVEY (NCSS).

NOTES

Tc PATH TABLE

SUBCAT	Tc PATH	FLOW	LENGTH	SLOPE (FT/FT)
OS1	A–B	SHEET	75	0.053
	B–C	SHALLOW CONC	81	0.049
	C–D	SHALLOW CONC	118	0.118
	D–E	SHALLOW CONC	483	0.014
OS2	A–B	SHEET	75	0.073
	B–C	SHALLOW CONC	85	0.094
	C–D	SHALLOW CONC	544	0.014
S1	A–B	SHEET	75	0.080
	B–C	SHALLOW CONC	117	0.017
	C–D	SHALLOW CONC	50	0.020
	D–E	SHALLOW CONC	121	0.024
S2	A–B	SHEET	75	0.080
	B–C	SHALLOW CONC	111	0.045
	C–D	CHANNEL FLOW	128	0.029
	D–E	SHALLOW CONC	59	0.016
	E–F	CHANNEL FLOW	184	0.005
	F–G	CHANNEL FLOW	123	0.008
S3	A–B	SHEET	75	0.053
	B–C	SHALLOW CONC	121	0.028
	C–D	SHALLOW CONC	77	0.006

THIS PLAN IS FOR REVIEW PURPOSES ONLY AND IS NOT INTENDED FOR CONSTRUCTION OR RECORDING

Revision:	By:	Date:	Change:
3	SMA	9/7/18	SUBMITTED FOR FINAL SITE PLAN/SUBDIVISION REVIEW
2	SMA	5/11/18	SUBMITTED FOR PRELIMINARY SITE PLAN/SUBDIVISION REVIEW
1	SMA	5/4/18	SUBMITTED FOR MDEP TIER 1 REVIEW

PROJECT NUMBER: 41041 | ACAD FILE: 41041–DRAINAGE.DWG | SCALE: 1" = 60' | DATE: MAY 1, 2018

Drawing Name:
PRE–DEVELOPMENT DRAINAGE AREA PLAN

Project Name:
PROPOSED CAPISIC MEADOWS SUBDIVISION
130 BANCROFT STREET, PORTLAND, MAINE 04102

Owner/Applicant:
WB GROUP, INC
130 BANCROFT STREET, PORTLAND, MAINE 04102

STATE OF MAINE ANTHONY P. PANCIOCCO JR. No. 10941 LICENSED PROFESSIONAL ENGINEER
9-7-18

SHEET 1 OF 2

SURVEYING • ENGINEERING • LAND PLANNING
Northeast Civil Solutions
INCORPORATED
381 PAYNE ROAD, SCARBOROUGH, MAINE 04074
tel 207.883.1000 fax 207.883.1001 e-mail / website info@northeastcivilsolutions.com www.northeastcivilsolutions.com

0 60' 120' 240'

E:\LAND PROJECT\41000\41041-WAGNER-PORTLAND\PLANSET\41041-DRAINAGE.DWG

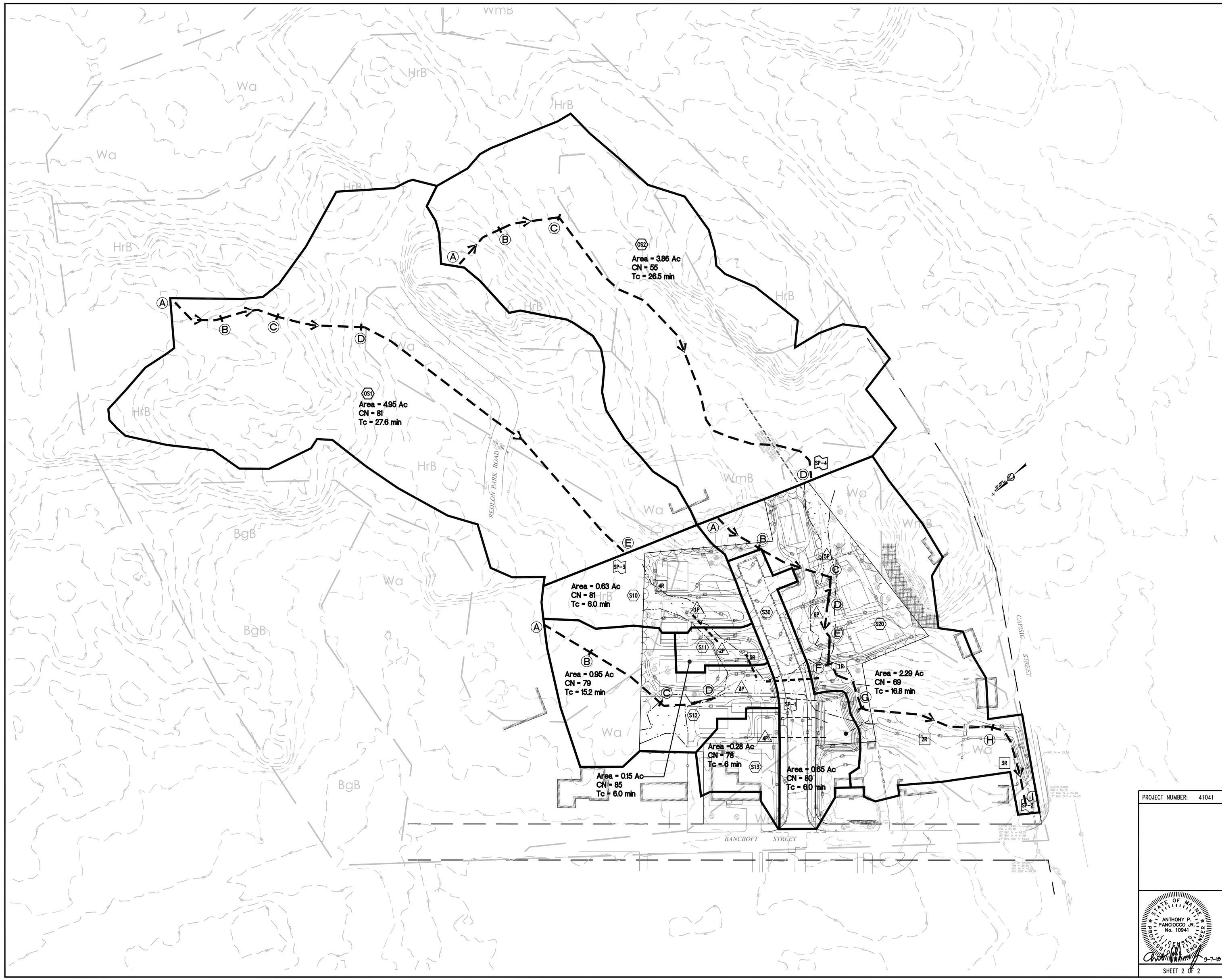

LEGEND

SP1	STUDY POINT
S1	SUBCATCHMENT
P1	POND
R1	REACH
	POST–DEVELOPMENT DRAINAGE SUBCATCHMENT
	TIME OF CONCENTRATION PATH
	SOIL BOUNDARY

SOILS LEGEND

SYMBOL	SOIL TYPE	HSG
HrB	HOLLIS FINE SANDY LOAM, 3%–8% SLOPES	D
Wa	WALPOLE FINE SANDY LOAM	A/D
WmB	WINDSOR LOAMY SAND, 0%–8% SLOPES	A

THE SOURCE OF THE SOIL TYPES AND BOUNDARIES IS THE NATIONAL COOPERATIVE SOIL SURVEY (NCSS).

NOTES

Tc PATH TABLE

SUBCAT	Tc PATH	FLOW	LENGTH	SLOPE (FT/FT)
OS1	A–B	SHEET	75	0.053
	B–C	SHALLOW CONC	81	0.049
	C–D	SHALLOW CONC	118	0.118
	D–E	SHALLOW CONC	483	0.014
OS2	A–B	SHEET	75	0.073
	B–C	SHALLOW CONC	85	0.094
	C–D	SHALLOW CONC	544	0.014
10S	---	DIRECT	---	---
11S	---	DIRECT	---	---
12S	A–B	SHEET	75	0.053
	B–C	SHALLOW CONC	121	0.028
	C–D	CHANNEL FLOW	77	0.006
13S	---	DIRECT	---	---
20S	A–B	SHEET	75	0.080
	B–C	SHALLOW CONC	103	0.048
	C–D	PIPE	39	0.025
	D–E	SHALLOW CONC	59	0.016
	E–F	PIPE	33	0.030
	F–G	CHANNEL FLOW	69	0.029
	G–H	CHANNEL FLOW	184	0.005
	H–I	CHANNEL FLOW	123	0.008
30S	---	DIRECT	---	---

THIS PLAN IS FOR REVIEW PURPOSES ONLY AND IS NOT INTENDED FOR CONSTRUCTION OR RECORDING

Revision:	By:	Date:	Change:
3	SMA	9/7/18	SUBMITTED FOR FINAL SITE PLAN/SUBDIVISION REVIEW
2	SMA	5/11/18	SUBMITTED FOR PRELIMINARY SITE PLAN/SUBDIVISION REVIEW
1	SMA	5/4/18	SUBMITTED FOR MDEP TIER 1 REVIEW

PROJECT NUMBER: 41041 | ACAD FILE: 41041–DRAINAGE.DWG | SCALE: 1" = 60' | DATE: MAY 1, 2018

Drawing Name:
POST–DEVELOPMENT DRAINAGE AREA PLAN

Project Name:
PROPOSED CAPISIC MEADOWS SUBDIVISION
130 BANCROFT STREET, PORTLAND, MAINE 04102

Owner/Applicant:
WB GROUP, INC
130 BANCROFT STREET, PORTLAND, MAINE 04102

STATE OF MAINE
ANTHONY P. PANCIOCCO JR.
No. 10941
LICENSED PROFESSIONAL ENGINEER
9-7-18

SHEET 2 OF 2

SURVEYING • ENGINEERING • LAND PLANNING
Northeast Civil Solutions
INCORPORATED
381 PAYNE ROAD, SCARBOROUGH, MAINE 04074
tel 207.883.1000 fax 207.883.1001 e-mail / website info@northeastcivilsolutions.com www.northeastcivilsolutions.com

0 60' 120' 240'

E:\LAND PROJECT\41000\41041-WAGNER-PORTLAND\CAPISIC\41041-DRAINAGE.DWG