CITY OF PORTLAND
PUBLIC WORKS DEPARTMENT

CONTRACT DRAWINGS

DIAMOND TIDE GATE PROJECT

BID NUMBER: 19001

DESIGNED BY:

WRIGHT-PIERCE
Engineering a Better Environment

888.621.8156 | www.wright-pierce.com

6/29/18
RYAN T. WINGARD, P.E. DATE
WRIGHT-PIERCE

YEAR APPROVED
2018

PREPARED FOR:
BRADLEY A. ROLAND, P.E.
SENIOR PROJECT ENGINEER
PUBLIC WORKS DEPARTMENT - WATER RESOURCES

7-3-18
KEITH GRAY, P.E. DATE
ENGINEERING MANAGER / CITY ENGINEER

CONSTRUCTION PLANS
JULY 2018

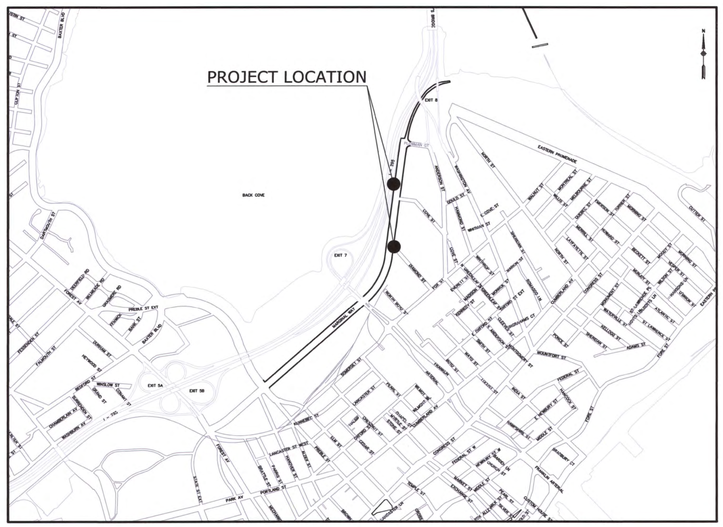

INDEX OF PLANS

NO.	TITLE
1	COVER SHEET WITH PROJECT LOCATION MAP
2	GENERAL NOTES
3	EROSION CONTROL NOTES
4	EXISTING CONDITIONS, DEMOLITION AND PROPOSED UTILITY PLAN - DIAMOND
5-7	CONSTRUCTION DETAILS

STATE OF MAINE RYAN TODD WINGARD NO. 11477 LICENSED PROFESSIONAL ENGINEER 6/29/18

STATE OF MAINE STEVE L. GUERRETTE 14384 LICENSED PROFESSIONAL ENGINEER 6/29/18

W-P PROJECT #12887C

GENERAL NOTES

1. LOCATIONS OF UTILITIES ARE APPROXIMATE AND IT SHALL BE THE CONTRACTORS RESPONSIBILITY TO HAVE ALL THE UTILITIES LOCATE THEIR SERVICES PRIOR TO THE START OF CONSTRUCTION. THE LOCATION, TYPE AND SIZE OF EXISTING PIPES, DUCTS, CONDUITS AND OTHER UNDERGROUND UTILITIES AND STRUCTURES ARE SHOWN ON THE DRAWINGS ARE NOT WARRANTED TO BE EXACT NOR IS IT WARRANTED THAT ALL UNDERGROUND UTILITIES AND STRUCTURES ARE SHOWN. INFORMATION SHOWN IS CONSIDERED APPROXIMATE BOTH AS TO SIZE AND LOCATION AND IS INDICATED ON THE DRAWINGS TO GIVE BIDDERS A GENERAL IDEA OF EXISTING CONDITIONS. IT IS UNDERSTOOD AND AGREED THAT THE CONTRACTOR SHALL NOT RELY UPON THESE DRAWINGS FOR SUCH INFORMATION AND SHALL MAKE EXAMINATIONS IN THE FIELD BY VARIOUS AVAILABLE METHODS AND SHALL OBTAIN INFORMATION FROM UTILITY CORPORATIONS AND INDIVIDUALS AS TO THE LOCATION OF ALL SUBSURFACE STRUCTURES BOTH PUBLIC AND PRIVATE PRIOR TO COMMENCEMENT OF CONSTRUCTION. DEPTH OF SERVICES ARE UNKNOWN AND SHALL BE FIELD VERIFIED BY THE CONTRACTOR. EXCAVATING TEST PITS AS NECESSARY TO VERIFY UTILITY LOCATIONS AND DEPTHS SHALL BE INCIDENTAL TO THE PROJECT.

2. THE CONTRACTOR SHALL CALL THE APPROPRIATE UTILITY COMPANY AND DIG SAFE (888–344–7233 OR DIAL 811) AT LEAST 72 HOURS PRIOR TO ANY EXCAVATION TO REQUEST EXACT FIELD LOCATION OF UTILITIES. IT SHALL BE THE RESPONSIBILITY OF THE CONTRACTOR TO COORDINATE WORK AND SCHEDULE WITH THE UTILITY RELOCATION WORK AND PROPER UTILITY COMPANY. THE FOLLOWING UTILITIES ARE KNOWN TO HAVE FACILITIES WITHIN THE PROJECT LIMITS:

   CENTRAL MAINE POWER COMPANY
   UNITIL
   PORTLAND FIRE DEPARTMENT
   PORTLAND WATER DISTRICT
   CITY OF PORTLAND – DEPARTMENT OF PUBLIC WORKS
   TIME WARNER CABLE – SPECTRUM
   FAIRPOINT
   MAINE CENTRAL RAILROAD

   ANY ADDITIONAL UTILITY WORK NOT SPECIFIED ON THE PLANS SHALL BE COMPLETED BY THE RESPECTIVE UTILITY COMPANY.

3. IT IS THE CONTRACTOR'S RESPONSIBILITY TO FAMILIARIZE THEMSELVES WITH THE EXISTING CONDITIONS PRIOR TO BIDDING.

4. THE CONTRACTOR SHALL COORDINATE DISRUPTION OF PRIVATE UTILITY SERVICES WITH LAND OWNER AT LEAST 2 DAYS (48 HOURS) PRIOR TO SCHEDULED DISRUPTION.

5. PRIOR TO THE BEGINNING OF CONSTRUCTION, THE CONTRACTOR SHALL SECURE A STREET OPENING PERMIT FROM THE PORTLAND DEPARTMENT OF PUBLIC WORKS. NO FEE WILL BE CHARGED FOR THIS PERMIT.

6. EXISTING CONDITIONS ARE BASED ON SURVEY COMPLETED BY WRIGHT–PIERCE OF PORTLAND, MAINE IN 2014.

7. VERTICAL DATUM IS REFERENCED TO THE CITY DATUM. CITY DATUM IS +0.20' FEET OF NGVD 1929 (NGVD29–0.20'=CITY OF PORTLAND DATUM). HORIZONTAL DATUM IS REFERENCED TO STATE PLANE NAD 1983 (FEET), MAINE WEST ZONE.

8. PROPERTY MARKERS AND STREET LINE MONUMENTS SHALL BE PROPERLY PROTECTED AND SHALL NOT BE DISTURBED. IF DISTURBED, THEY SHALL BE REPLACED BY A LICENSED SURVEYOR AT THE CONTRACTOR'S EXPENSE.

9. ALL EXISTING CATCH BASINS, MANHOLES, CONNECTIONS, CONDUIT AND PIPING SHALL BE CLEANED AND LEFT IN SATISFACTORY OPERATING CONDITION AFTER CONSTRUCTION HAS BEEN COMPLETED UNLESS OTHERWISE NOTED TO BE REMOVED OR ABANDONED. NO SEPARATE PAYMENT WILL BE MADE FOR THIS WORK.

10. ALL LAWN AREAS, WALKWAYS, AND DRIVEWAYS OUTSIDE THE WORK AREA, DAMAGED BY THE CONTRACTOR, SHALL BE REPAIRED BY THE CONTRACTOR AT NO EXPENSE TO THE CITY.

11. EXISTING PAVEMENT SHALL BE SAW CUT AND BUTTED TO THE NEW PAVEMENT. NO FEATHERING OF PAVEMENT WILL BE PERMITTED. DRIVEWAY BUTT JOINTS ARE INCIDENTAL TO THE CONTRACT AND SHALL NOT REQUIRE MEASUREMENT.

12. EXISTING DRAINAGE STRUCTURES SHALL NOT BE DISTURBED UNLESS OTHERWISE NOTED IN THE DRAWINGS OR BY THE CITY REPRESENTATIVE.

13. BEFORE CONNECTING NEW PIPES TO AN EXISTING SEWER LINE, THE CONTRACTOR SHALL NOTIFY SEWER MAINTENANCE DIVISION OR THE CITY OF PORTLAND DEPARTMENT OF PUBLIC WORKS. <u>NO WORK SHALL BE DONE WITHOUT THEIR APPROVAL.</u>

14. THE CONTRACTOR SHALL BE RESPONSIBLE FOR REPAIRING ANY TRENCH PAVEMENT THAT HAS EXPERIENCED EXCESSIVE SETTLEMENT, CRACKING OR OPENING OF JOINTS. REPAIRS MAY INCLUDE OVERLAY, REMOVAL OF UNACCEPTABLE MATERIALS, COMPLETE REPLACEMENT, JOINT SEALING OR REBUTTING PAVEMENT AS REQUIRED. THIS WORK MAY BE NECESSARY <u>AFTER THE FINAL ACCEPTANCE</u> OF WORK OR PRIOR TO THE END OF THE ONE YEAR GUARANTEE. THIS WORK SHALL BE DONE AT THE CONTRACTORS EXPENSE.

15. CHECK VALVE VAULT SHALL BE A REINFORCED PRECAST STRUCTURE (PAY ITEM 543.73).

16. ALL MANHOLE FRAMES SHALL BE SUPPLIED WITH SOLID MANHOLE COVERS, INCLUDING BOLTED DOWN COVERS WHERE REQUIRED. THE RIM ELEVATION OF PROPOSED STORM AND SEWER MANHOLES SHALL BE SET AT THE NEW FINISHED PAVEMENT SURFACE GRADE. WINTERIZATION MAY BE REQUIRED.

17. NEW CATCH BASINS SHALL BE INSTALLED WITH A TYPE A–4 CATCH BASIN INLET STONE INCIDENTAL TO PAY ITEM 604.132. RIM ELEVATIONS FOR CATCH BASINS ARE GIVEN AT THE FACE OF THE CURB AND TAKE INTO ACCOUNT THE 3" DEPRESSION. WINTERIZATION MAY BE REQUIRED.

18. ON ALL "REMOVE" STRUCTURES, THE CONTRACTOR SHALL REMOVE THE STRUCTURES ENTIRELY. THE CONTRACTOR, UPON APPROVAL OF THE CITY OR ENGINEER, MAY REMOVE THE STRUCTURE THREE FEET BELOW GRADE, FILL THE STRUCTURE WITH STONE AND BACKFILL. ALL EXISTING GRANITE CATCH BASIN STONES, GRANITE CURB, MANHOLE FRAMES AND COVERS TO BE REMOVED SHALL BE DELIVERED TO THE CITY STOCKYARD AS DIRECTED. REMOVAL AND DISPOSAL OF EXISTING STRUCTURES IN WHICH THE CENTER OF THE EXISTING STRUCTURE IS WITHIN 8 FEET OF THE CENTER OF THE NEW STRUCTURE OR WITHIN 4 FEET OF THE HORIZONTAL LIMITS OF EXCAVATION FOR PROPOSED STRUCTURES SHALL BE INCIDENTAL TO THE PAY ITEM FOR THE NEW STRUCTURE BEING INSTALLED.

19. REMOVAL AND DISPOSAL OF EXISTING STORM DRAINS, SEWER PIPES, OR OTHER PIPE STRUCTURES WITHIN 4 FEET OF THE HORIZONTAL LIMITS OF EXCAVATION FOR PROPOSED PIPES OR STRUCTURES SHALL BE INCIDENTAL TO THE PAY ITEM FOR WHICH THE PROPOSED PIPE OR STRUCTURE IS INSTALLED.

20. THE CONTRACTOR SHALL PROVIDE ALL LABOR, EQUIPMENT, AND MATERIALS AS REQUIRED TO PERFORM THE WORK AS INDICATED ON THE DRAWINGS AND IN THE SPECIFICATIONS. ALL WORK SHALL BE COMPLETED IN ACCORDANCE WITH THE APPLICABLE FEDERAL, STATE AND LOCAL CODES.

21. THE CONTRACTOR SHALL BE RESPONSIBLE FOR THE LAYOUT OF ALL PROPOSED WORK AS SHOWN ON THE DRAWINGS (STATIONS AND OFFSETS FOR MANHOLES AND OTHER STRUCTURES ARE SHOWN ON THE DRAWINGS TO BE CENTER OF EACH). ADDITIONALLY, THE CONTRACTOR IS RESPONSIBLE FOR PROVIDING ALL "AS–BUILT" INFORMATION AS REQUIRED IN THE SPECIFICATION.

22. THE EXISTING COLLECTION SYSTEM INCLUDING DIVERSION STRUCTURES, GRAVITY SEWERS AND STORM DRAINS SHALL REMAIN FULLY OPERATIONAL DURING CONSTRUCTION UNTIL THE PROJECT IS COMPLETED AND ACCEPTED BY THE OWNER. THE CONTRACTOR SHALL FULLY COORDINATE CONSTRUCTION ACTIVITIES WITH THE OWNER'S OPERATIONS TO MINIMIZE ADVERSE IMPACTS ON THEIR EXISTING OPERATIONS. THE COST OF ADDITIONAL WORK REQUIRED TO MAINTAIN EXISTING OPERATIONS THROUGHOUT CONSTRUCTION OPERATIONS, INCLUDING BYPASS PUMPING, WILL NOT BE ELIGIBLE FOR PAYMENT AS AN EXTRA UNDER A CHANGE ORDER; RATHER THESE COSTS WILL BE CONSIDERED AS "INCIDENTAL" TO THE BIDS SUBMITTED FOR THIS CONTRACT. ALSO, THE NECESSITY TO COORDINATE CONSTRUCTION ACTIVITIES WITH OWNER OPERATIONS WILL NOT BE CONSIDERED A VALID OR MERITORIOUS REASON FOR A DELAY CLAIM OR TIME EXTENSION ON THIS PROJECT.

23. THERE MAY BE ONE OR MORE CONTRACTORS PERFORMING WORK IN THE PROJECT AREA. COORDINATION BETWEEN CONTRACTORS IS A PRIMARY RESPONSIBILITY OF EACH CONTRACTOR WITH THE INTENT TO AVOID DELAYS, COMPLICATIONS AND UNDO DISRUPTION OF CONSTRUCTION ACTIVITY.

24. THE CONTRACTOR SHALL MAINTAIN TRAFFIC IN A SAFE MANNER AT ALL TIMES DURING CONSTRUCTION. THE MOST CURRENT EDITION OF THE MANUAL ON UNIFORM TRAFFIC CONTROL DEVICES (MUTCD) MANUAL FOR BOTH WORK ZONE AND TRAFFIC CONTROL REQUIREMENTS SHALL APPLY. THE CONTRACTOR SHALL BE RESPONSIBLE FOR CREATING A TRAFFIC CONTROL PLAN IN ACCORDANCE WITH SECTION 652 (PAY ITEM 652.39).

25. EXISTING FACILITIES AND IMPROVEMENTS (I.E. LIGHT POLES, SIGNS, ETC.) SHALL BE REMOVED AND REPLACED OR PROTECTED AS REQUIRED DURING CONSTRUCTION AND SHALL BE CONSIDERED INCIDENTAL TO THE RELATED PAY ITEMS. BRACING OF UTILITY POLES, WHERE REQUIRED, SHALL BE INCIDENTAL TO THE PROJECT.

26. THE CONTRACTOR SHALL BE RESPONSIBLE FOR THE PRESERVATION OF ALL TREES ON THE PROJECT THAT ARE NOT CALLED OUT TO BE REMOVED. EQUIPMENT AND MATERIALS SHALL NOT BE STORED OVER THE ROOT ZONE, WHICH SHALL BE DEFINED AS THE AREA ENCOMPASSED BY THE DRIPLINE. WHENEVER POSSIBLE, OTHER PLANTINGS SHALL BE PRESERVED BY METHODS NECESSARY INCLUDING TRANSPLANTING AND/OR TEMPORARY RELOCATION. THE ASSOCIATED COSTS ARE INCIDENTAL TO THE PROJECT. ANY TREES DAMAGED BY THE CONTRACTORS OPERATIONS SHALL BE REPAIRED USING APPROVED TREE DRESSING OR PAINT IN ACCORDANCE WITH THE APPROPRIATE PROVISIONS OF SECTION 201 OF THE STANDARD SPECIFICATIONS. ANY TREE DAMAGED BY THE CONTRACTOR SHALL RESULT IN A FINANCIAL PENALTY OF $1,500 FOR EACH INCIDENCE. DAMAGE SHALL INCLUDE ANY AND ALL IMPACTS TO TREES TO INCLUDE, BUT NOT LIMITED TO, LIMB/TREE BREAKAGE, DAMAGE TO TREE TRUNKS, ROOTS STRUCTURE AND ANY INCIDENTAL IMPACTS.

27. DELIVERED WITHIN (10) CALENDAR DAYS OF THE CONTRACT SIGNING, THE CONTRACTOR SHALL SUBMIT THREE (3) COPIES OF A CONSTRUCTION OPERATIONS PLAN TO THE ENGINEER, AND CITY OF PORTLAND. THE COST OF THE OPERATIONS PLAN SHALL BE INCIDENTAL.

28. ALL PIPE TRENCH EXCAVATIONS SHALL BE BACKFILLED "CLOSED" DURING CONTRACTOR NON–WORKING HOURS INCLUDING DAYS, NIGHTS, HOLIDAYS AND WEEKENDS. THE CONTRACTOR MAY REQUEST IN WRITING TO THE ENGINEER AND OWNER TO SECURE OPEN EXCAVATION IN LIEU OF BACKFILLED AND "CLOSED". NOT OBTAINING SECURE OPEN EXCAVATION PERMISSION SHALL NOT BE A BASIS FOR CONTRACTOR CLAIMS AGAINST THE OWNER.

29. THERE IS A POTENTIAL THAT THE WORK OF THIS CONTRACT WILL INVOLVE THE EXCAVATION OF CONTAMINATED SOIL BASED ON HISTORIC USES. THE CONTRACTOR SHALL BE RESPONSIBLE FOR COST OF HANDLING CONTAMINATED SOIL PER PAY ITEMS 203.2332 AND 203.2333.

30. GEOTECHNICAL AND ENVIRONMENTAL DATA WAS COLLECTED BETWEEN SEPTEMBER AND OCTOBER, 2014. REFERENCE GEOTECHNICAL AND ENVIRONMENTAL DATA REPORT BY HALEY & ALDRICH IN THE APPENDICES OF THE SPECIFICATIONS. EXPLORATION LOCATIONS ARE DESIGNATED ON THE DRAWINGS FOR INFORMATIONAL PURPOSES ONLY AND MAY NOT BE SHOWN AT EXACT LOCATIONS ALONG PIPE ALIGNMENT.

31. TEST PITS SHALL BE EXCAVATED AS SHOWN ON THE PLANS OR AS DIRECTED BY THE ENGINEER. THE CONTRACTORS SHALL OBTAIN THE LOCATION OF THE UTILITY/STRUCTURE IN QUESTION WITH TIES TO SURROUNDING PERMANENT FEATURES AND OBTAIN THE ELEVATION OF BOTH THE TOP AND BOTTOM OF THE UTILITY/STRUCTURE. COSTS FOR TEST PITS WILL BE PAID FOR THROUGH BID ITEM 203.28.

32. ANY EXCAVATION BY THE CONTRACTOR THAT UNCOVERS A HISTORICAL OR ARCHAEOLOGICAL ARTIFACT SHALL BE IMMEDIATELY REPORTED TO THE OWNER AND A REPRESENTATIVE OF THE STATE HISTORIC PRESERVATION OFFICE. CONSTRUCTION SHALL BE TEMPORARILY HALTED PENDING THE NOTIFICATION PROCESS AND FURTHER DIRECTIONS ISSUED BY THE AGENCY AFTER CONSULTATION WITH THE STATE HISTORIC PRESERVATION OFFICE (SHPO). THE CONTRACTOR SHALL NOT BE ENTITLED TO COMPENSATION DUE TO DELAYS ASSOCIATED WITH THIS ITEM. THE COST SHALL BE CONSIDERED INCIDENTAL TO THE PROJECT.

33. ANY REQUIRED PROJECT WORK NOT IDENTIFIED UNDER A PAY ITEM OR RELATED TO A PAY ITEM SHALL BE CONSIDERED INCIDENTAL TO THE CONTRACT. NO EXTRA PAYMENT WILL BE MADE.

34. IF WORK IS NECESSARY BEYOND THE SAW CUT LINES SHOWN ON THE CONTRACT PLANS TO ACCOMMODATE PROJECT CONSTRUCTION, COSTS SHALL BE CONSIDERED INCIDENTAL TO COSTS OF CONSTRUCTION AND NO EXTRA PAYMENT WILL BE MADE. ALL REQUIRED PROJECT WORK ASSOCIATED WITH CONTRACT DRAWINGS, DETAILS, GENERAL CONDITIONS AND SPECIFICATIONS SHALL BE CONSIDERED INCIDENTAL TO THE RELATED PAY ITEMS. NO EXTRA PAYMENT WILL BE MADE FOR ANY DIRECT OR INCIDENTAL WORK REQUIRED TO COMPLETE THE PROJECT IN ITS ENTIRETY AND READY FOR OWNER ACCEPTANCE.

35. THE CITY OF PORTLAND SHALL HAVE THE RIGHT AND AUTHORITY TO DETERMINE THE ACCEPTABILITY OF WORK AND MATERIALS IN PROGRESS OR COMPLETED. THE CITY OF PORTLAND SHALL HAVE THE RIGHT TO REJECT ANY WORK OR MATERIALS THAT DO NOT CONFORM, IN IT'S SOLE OPINION, TO THE PLANS OR SPECIFICATIONS.

36. ALL MATERIAL SCHEDULES SHOWN ON THE PLANS ARE FOR GENERAL INFORMATION ONLY. THE CONTRACTOR SHALL PREPARE THEIR OWN MATERIAL SCHEDULES BASED UPON PLAN REVIEW. ALL SCHEDULES SHALL BE VERIFIED IN THE FIELD BY THE CONTRACTOR PRIOR TO ORDERING MATERIALS OR PERFORMING WORK.

37. ELECTRICAL AND TELECOMMUNICATIONS SERVICES ARE PROVIDED VIA OVERHEAD LINES UNLESS OTHERWISE SHOWN. THE CONTRACTOR SHALL USE CAUTION WHEN WORKING NEAR EXISTING OVERHEAD LINES.

38. TEST PITS SHALL BE COMPLETED AT LEAST TWO WEEKS PRIOR TO THE START OF CONSTRUCTION OR ORDERING OF MATERIALS AT THE TEST PIT LOCATION. THE CONTRACTOR SHALL PROMPTLY PROVIDE TEST PIT INFORMATION TO THE ENGINEER FOR REVIEW, AND SHALL NOTIFY THE ENGINEER OF ANY POTENTIAL UTILITY CROSSING CONFLICTS.

39. DISPOSAL OF SURPLUS MATERIAL SHALL BE THE RESPONSIBILITY OF THE CONTRACTOR. SURPLUS MATERIAL SHALL NOT BE DISPOSED OF ON THE PROJECT SITE. DISPOSAL SHALL BE MADE ONLY AT WASTE AREAS THAT ARE LICENSED TO ACCEPT SUCH MATERIALS, UNLESS THE MATERIALS CAN BE INCORPORATED INTO OTHER PROJECTS OF THE CONTRACTOR.

40. IF THE CONTRACTOR PROPOSES TO TEMPORARILY STOCKPILE ANY SURPLUS SOIL AND ROCK IN THE CITY OF PORTLAND, THE CONTRACTOR SHALL OBTAIN APPROVAL FOR EACH STOCKPILE LOCATION FROM THE CITY OF PORTLAND. STOCKPILING AND DEWATERING OF CONTAMINATED SOIL MATERIAL SHALL ALSO REQUIRE APPROVAL FROM LOCAL AND STATE AGENCIES. IF THE CONTRACTOR PROPOSES PERMANENT STOCKPILE OF ANY SURPLUS SOIL AND ROCK IN THE CITY OF PORTLAND, THE CONTRACTOR MUST OBTAIN ANY SITE PLAN AND FILL PERMITS REQUIRED FROM THE CITY PLANNING AUTHORITY OR ANY FILL PERMITS REQUIRED FROM MAINE DEP OR THE US ARMY CORP OF ENGINEERS. BOTH TEMPORARY AND PERMANENT STOCKPILE LOCATIONS SHALL MEET THE APPLICABLE SETBACK REQUIREMENTS IN THE CITY LAND USE CODE.

41. EXCAVATIONS ACCOMPLISHED AS PART OF THIS PROJECT SHALL BE CONSTRUCTED IN ACCORDANCE WITH OSHA REGULATIONS SUBPART P OF 29 CFR PART 1926.650–.652 (CONSTRUCTION STANDARD FOR EXCAVATIONS).

42. THE CONTRACTOR SHALL COMPLETE THE WORK WITHIN THE RIGHT–OF–WAY, AND SHALL BE RESPONSIBLE IF TRESPASSING ON PRIVATE PROPERTY OCCURS.

43. THE CONTRACTOR SHALL NOT PARK ON, IMPEDE ACCESS TO OR STORE EQUIPMENT/MATERIAL ON ADJACENT CITY OR PRIVATELY OWNED LAND WITHOUT WRITTEN CONSENT FROM THE CITY OR LAND OWNER.

44. ALL WORK COMPLETED UNDER THIS CONTRACT SHALL BE GOVERNED BY AND SHALL CONFORM WITH THE CITY OF PORTLAND TECHNICAL AND DESIGN STANDARDS AND GUIDELINES.

45. ALL MATERIALS AND CONSTRUCTION METHODS SHALL CONFORM WITH APPLICABLE FEDERAL, STATE AND CITY OF PORTLAND CODES AND SPECIFICATIONS.

46. PIPE LENGTHS, PIPE SLOPES AND PIPE INVERT CALCULATIONS ARE MEASURED ALONG THE PIPE CENTER LINE TO THE INSIDE WALL OF MANHOLE AND CATCH BASIN STRUCTURES.

47. PROPOSED CATCH BASIN (CB), SEWER MANHOLE (SMH) AND DRAINAGE MANHOLE (DMH) SYMBOLS REPRESENT LOCATION OF NEW STRUCTURES. REFER TO DETAILS AND SPECIFICATIONS FOR INFORMATION ON FRAMES AND GRATES, COVERS, SHAPE, STYLE, AND DIMENSIONS.

48. THE CONTRACTOR SHALL PROVIDE, ERECT AND MAINTAIN ALL NECESSARY BARRIERS, FENCE LIGHTS, WARNING SIGNS AND OTHER DEVICES NECESSARY TO SAFEGUARD BOTH VEHICULAR AND BIKE/PEDESTRIAN TRAFFIC AND THE PUBLIC DURING WORKING AND NON–WORKING HOURS FOR THE DURATION OF THE PROJECT. THE SITE SHALL BE LEFT WITH APPROPRIATE SAFETY MEASURES IN PLACE DURING NON–WORKING HOURS.

49. CAPPED PIPE STUB LOCATIONS SHALL BE MARKED WITH EMBEDDED STAKES AND A MINIMUM OF THREE TIES SHOULD BE RECORDED. EMBEDDED STAKES SHALL BE 2x4 WITH PK NAIL DRIVEN IN TOP, LENGTH AS REQUIRED TO SPAN FROM TOP OF PIPE TO 6' BELOW GRADE. LOCATION AND ELEVATION OF PIPE STUB SHALL BE PROVIDED TO THE CITY OF PORTLAND ENGINEERING OFFICE. WARNING TAPE AND WIRE SHALL BE INSTALLED OVER PIPE STUBS IN ACCORDANCE WITH SPECIFICATION.

50. <u>COMPACTION REQUIREMENTS:</u>

LOCATION	MINIMUM COMPACTION*
BELOW PAVED AREAS	95%
BELOW SEEDED AREAS	90%

   *ALL PERCENTAGES OF COMPACTION SHALL BE OF MAXIMUM DRY DENSITY AT THE OPTIMUM MOISTURE CONTENT AS DETERMINED AND CONTROLLED IN ACCORDANCE WITH ASTM D–1557.

51. THE FOLLOWING WORK SHALL BE INCIDENTAL TO THE COST OF ALL NEW PIPE CULVERTS, STORM DRAINS, SEWER PIPES, AND NEW OR ALTERED MANHOLES, INLETS, AND CATCH BASINS (603 & 604 PAY ITEMS):
   - CUTTING OF PIPE AND/OR CONNECTIONS AND FITTINGS NECESSARY TO CONSTRUCT NEW STORM DRAIN AND SEWER PIPE AND APPURTENANCES.
   - WORK AND MATERIALS NECESSARY TO CONNECT NEW OR EXISTING PIPES TO EXISTING PIPES, CATCH BASINS, OR MANHOLES INCLUDING CORING AND PATCHING OF STRUCTURES AND INSTALLATION OF WATERTIGHT CONNECTIONS
   - CHANGES TO FLOW LINES, PROFILE GRADES, AND PIPE INVERTS OF ONE FOOT OR LESS.

52. INCLUDE LOAM, SEED AND MULCH (PAY ITEM 615.071) FOR ONE (1) FOOT MINIMUM WIDE STRIP ON SIDES OF ROADS AND ACCESS DRIVES WHERE PAVEMENT IS BEING REMOVED AND REPLACED ADJACENT TO VEGETATED AREAS WITHIN THE PROJECT LIMITS. THIS IS IN ADDITION TO OTHER AREAS THAT HAVE BEEN DISTURBED BY CONSTRUCTION ACTIVITIES THAT MAY REQUIRE LOAM, SEED AND MULCH.

DEMOLITION NOTES

1. DEMOLITION OF EXISTING SEWERS SHALL INCLUDE EXCAVATION, REMOVAL OF SEWER PIPE AND STRUCTURES, CONCRETE CRADLE, INSTALLATION OF GRAVEL (TYPE B), COMPACTION AND SURFACE RESTORATION (EXCLUDING PAVING).

2. DEMOLITION SHALL BE COMPLETED IN COORDINATION WITH NEW INFRASTRUCTURE. THE CONTRACTOR SHALL ENSURE EXISTING ROAD SURFACE DRAINAGE IS MAINTAINED DURING CONSTRUCTION. THE CONTRACTOR IS RESPONSIBLE FOR TEMPORARY DRAINAGE PROVISIONS. COSTS FOR TEMPORARY DRAINAGE PROVISIONS SHALL BE CONSIDERED INCIDENTAL TO THE CONTRACT.

LEGEND

EXISTING SYMBOLS	PROPOSED SYMBOLS
DRAIN/SEWER MANHOLE	DRAIN/SEWER MANHOLE (D.MH. S.MH.)
CATCH BASIN/INLET	CATCH BASIN, TYPE "E"
GAS/WATER VALVE (GV WV)	CATCH BASIN, TYPE "F"
WATER SHUT OFF	
HYDRANT	HYDRANT
LIGHT/UTILITY POLE	LIGHT/UTILITY POLE
MONUMENT FOUND (MF)	PROPOSED MONUMENT (MS)
IRON PIPE/REBAR (IPF/IRF/CIRF)	CAPPED REBAR SET (CIRS)
MAGNETIC NAIL SET (MAGS)	
SIDEWALK ACCESSIBILITY	SIDEWALK ACCESSIBILITY
BUSH/TREE STUMP	BUSH OR SHRUBBERY
DECIDUOUS TREE	BORING TEST
CONIFER TREE	TEST PIT

GENERAL LINE TYPE

CENTERLINE
PARCEL LINE
PROPERTY LINE
STREET LINE
RIGHT OF WAY LINE
BUILDING TIE LINE (67.84' B.S. HELD)
LEDGE PROFILE
STONE WALL
RAILROAD TRACKS

EXISTING LINEWORK / PROPOSED LINEWORK

EDGE OF PAVEMENT
GRANITE CURB
GUARD RAIL
SILT FENCE (SF)
CHAIN LINK FENCE
WOOD/STOCKADE FENCE
EDGE OF TREES/SHRUBS

EXISTING UTILITIES / PROPOSED UTILITIES

COMBINED SEWER (CS)
HOUSE LATERAL (L)
STORM DRAIN (D)
SANITARY SEWER (S)
SANITARY FORCE MAIN (FM)
UNDERDRAIN (UD)
CABLE TV (CTV)
ELECTRIC LINE (E)
FIRE ALARM (FA)
GAS LINE (G)
TELEPHONE LINE (T)
WATER LINE (W)

STATE OF MAINE – STEVE L. GUERRETTE – 14384 – LICENSED PROFESSIONAL ENGINEER – 6/29/18

Civil 3D 2014 Drawing Name:
Civil 3D 2014 Survey Database:
Civil 3D 2014 Data Shortcuts:

REFERENCES:

REVISIONS:

DESIGNED BY: SLG
DRAWN BY: CGH
CHECKED BY: RTW
SCALE: AS NOTED
DATE: 06/29/18

STATE OF MAINE – RYAN TODD WINGARD – NO. 11477 – LICENSED PROFESSIONAL ENGINEER – 6/29/18

DIAMOND TIDE GATE PROJECT

GENERAL NOTES

CITY OF PORTLAND, MAINE
PUBLIC WORKS DEPARTMENT
ENGINEERING DIVISION

RESURGAM – CITY OF PORTLAND, MAINE

SHEET # 2 OF 7

PLAN NUMBER C-1

EROSION CONTROL NOTES

THIS PLAN HAS BEEN DEVELOPED TO PROVIDE A STRATEGY FOR DEALING WITH SOIL EROSION AND SEDIMENTATION DURING AND AFTER THE CONSTRUCTION OF THE DIAMOND TIDE GATE PROJECT. ALL SEDIMENT AND EROSION CONTROL MEASURES SHALL BE INSTALLED IN ACCORDANCE WITH "MAINE EROSION CONTROL AND SEDIMENTATION HANDBOOK FOR CONSTRUCTION: BEST MANAGEMENT PRACTICES", PUBLISHED BY THE CUMBERLAND COUNTY SOIL AND WATER DISTRICT AND MAINE DEPARTMENT OF ENVIRONMENTAL PROTECTION, LATEST EDITION. IT SHALL BE THE RESPONSIBILITY OF THE CONTRACTOR TO POSSESS A COPY OF THE EROSION CONTROL PLAN AT ALL TIMES.

PRE–CONSTRUCTION PHASE

1. PRIOR TO THE BEGINNING OF ANY CONSTRUCTION, SEDIMENT BARRIERS WILL BE STAKED/INSTALLED ACROSS THE SLOPE(S), ON THE CONTOUR AT OR JUST BELOW THE LIMITS OF CLEARING OR GRUBBING, AND/OR JUST ABOVE AND ADJACENT TO PROPERTY LINES OR WATERCOURSES TO PROTECT AGAINST CONSTRUCTION RELATED EROSION. THE PLACEMENT OF SEDIMENT BARRIERS SHALL BE COMPLETED IN ACCORDANCE WITH GUIDELINES ESTABLISHED IN BEST MANAGEMENT PRACTICES AND IN ACCORDANCE WITH THE EROSION CONTROL PLAN AND DETAILS IN THIS PLAN SET. THIS NETWORK IS TO BE MAINTAINED BY THE CONTRACTOR UNTIL ALL EXPOSED SLOPES HAVE AT LEAST 85%–90% VIGOROUS PERENNIAL VEGETATIVE COVER TO PREVENT EROSION. TEMPORARY EROSION CONTROL MEASURES SHALL BE REMOVED WITHIN 30 DAYS AFTER PERMANENT STABILIZATION IS ATTAINED.

2. PRIOR TO CONSTRUCTION THE CONTRACTOR SHALL PREPARE A DETAILED SCHEDULE AND MARKED UP PLAN INDICATING AREAS AND COMPONENTS OF THE WORK AND KEY DATES SHOWING DATE OF DISTURBANCE AND COMPLETION OF THE WORK. THE CONTRACTOR SHALL SCHEDULE A PRE–CONSTRUCTION MEETING WITH THE CITY STAFF. THREE COPIES OF THE SCHEDULE AND MARKED UP PLAN SHALL BE PROVIDED TO THE CITY THREE DAYS PRIOR TO THE PRE–CONSTRUCTION MEETING. SPECIAL ATTENTION SHALL BE GIVEN TO THE 14 DAY LIMIT OF DISTURBANCE IN THE SCHEDULE ADDRESSING TEMPORARY AND PERMANENT VEGETATION MEASURES.

CONSTRUCTION AND POST–CONSTRUCTION PHASE

1. IN ORDER TO PROTECT THE NATURAL RESOURCES IN THE PROJECT AREA, ONLY DISTURB THOSE AREAS NECESSARY TO CONSTRUCT THE ROAD, INSTALL LANDSCAPING, AND SPECIFIED PIPING.

2. AREAS UNDERGOING ACTUAL CONSTRUCTION SHALL ONLY EXPOSE THAT AMOUNT OF MINERAL SOIL NECESSARY FOR PROGRESSIVE AND EFFICIENT CONSTRUCTION. AN AREA CONSIDERED OPEN IS ANY AREA NOT STABILIZED BY PAVEMENT, VEGETATION, MULCHING, EROSION CONTROL MATS, RIPRAP OR GRAVEL BASE ON A ROAD. OPEN AREAS SHALL BE ANCHORED WITH TEMPORARY EROSION CONTROL AS SHOWN ON THE DESIGN PLANS AND AS DESCRIBED WITHIN THIS EROSION CONTROL PLAN WITHIN 14–DAYS OF DISTURBANCE. AREAS LOCATED WITHIN 100' OF NATURAL RESOURCES SHALL BE ANCHORED WITH TEMPORARY EROSION CONTROL WITHIN SEVEN (7) DAYS. REFER TO WINTER EROSION CONTROL NOTES FOR THE TREATMENT OF OPEN AREAS AFTER OCTOBER 1ST OF THE CONSTRUCTION YEAR.

3. THOSE AREAS UNDERGOING ACTUAL CONSTRUCTION WILL BE LEFT IN AN UNTREATED OR UNVEGETATED CONDITION FOR A MAXIMUM OF 14 DAYS FROM FINAL GRADING OF THE LOAM. LOAM WILL BE STOCKPILED FOR FUTURE USE AND PROTECTED FROM EROSION LOSSES BY MULCH AND FILTER FABRIC/HAY BALE BARRIERS. STOCKPILES SHALL BE LOCATED WITHIN STAGING AREAS AGREED ON BY THE CITY.

4. PRIOR TO ANY GRUBBING OR CLEARING, A STABILIZED CONSTRUCTION ENTRANCE/EXIT SHALL BE CONSTRUCTED AT THE INTERSECTION OF THE PROPOSED ENTRANCES AND EXISTING ROADWAY TO AVOID TRACKING OF MUD, DUST AND DEBRIS FROM SITE.

5. PRIOR TO GRUBBING AND CLEARING THE SITE, STORM DRAIN INLET PROTECTION SHALL BE INSTALLED AT ALL CATCH BASINS.

6. PRIOR TO GRUBBING AND CLEARING, SEDIMENT BARRIERS WILL BE INSTALLED ACROSS THE SLOPES, ON THE CONTOUR, AT OR JUST BELOW THE LIMITS OF CONSTRUCTION AND/OR JUST ABOVE ANY DOWNSLOPE ADJACENT PROPERTY OR WETLAND TO PROTECT AGAINST RELATED EROSION.

7. THE CONTRACTOR MUST INSTALL ANY ADDED MEASURES THAT MAY BE NECESSARY TO CONTROL EROSION/SEDIMENTATION FROM THE SITE DEPENDANT UPON THE ACTUAL SIZE AND WEATHER CONDITIONS. CONTINUATION OF EARTHWORK OPERATIONS ON ADDITIONAL AREAS SHALL NOT BEGIN UNTIL THE EXPOSED SOIL SURFACE ON THE AREA BEING WORKED HAS BEEN STABILIZED, IN ORDER TO MINIMIZE AREAS WITHOUT EROSION CONTROL PROTECTION.

8. DURING THE CONSTRUCTION PHASE, INTERCEPTED SEDIMENT WILL BE RETURNED TO THE SITE AND REGRADED ONTO OPEN AREAS. THE DISPOSAL OF POST SEEDING SEDIMENT, IF ANY SHALL, BE THE RESPONSIBILITY OF THE CONTRACTOR.

9. WHEN WORK IS IMMEDIATELY ADJACENT TO ANY NATURAL RESOURCE, INCLUDING COASTAL WETLANDS, STREAMS AND HABITATS, THE CONSTRUCTION SITE MUST BE STABILIZED PRIOR TO THE END OF THE WORK DAY OR PRIOR TO ANY STORM EVENT. SEDIMENT BARRIERS SHALL BE PLACED BETWEEN ANY NATURAL RESOURCES AND THE DISTURBED AREA.

10. NO SLOPES, EITHER PERMANENT OR TEMPORARY, SHALL BE STEEPER THAN TWO HORIZONTAL TO ONE VERTICAL (2 TO 1) UNLESS STABILIZED WITH RIPRAP OR OTHER STRUCTURAL MEANS.

11. ALL TEMPORARY EROSION CONTROL MEASURES SHALL BE REMOVED ONCE THE SITE IS STABILIZED.

WINTER CONSTRUCTION

1. WINTER CONSTRUCTION PERIOD DEFINED: NOVEMBER 1 THROUGH APRIL 15

2. WINTER EXCAVATION AND EARTHWORK SHALL BE DONE SUCH THAT NO MORE THAN 0.25 ACRE OF THE SITE IS WITHOUT STABILIZATION AT ANY ONE TIME.

3. EXPOSED AREA SHOULD BE LIMITED SUCH THAT THE AREA CAN BE MULCHED IN ONE DAY PRIOR TO ANY SNOW EVENT.

4. CONTINUATION OF EARTHWORK OPERATIONS ON ADDITIONAL AREAS SHALL NOT BEGIN UNTIL THE EXPOSED SOIL SURFACE ON THE AREA BEING WORKED HAS BEEN STABILIZED SUCH THAT NO LARGER AREA OF THE SITE IS WITHOUT EROSION CONTROL PROTECTION AS LISTED IN ITEM 2 ABOVE.

5. AN AREA SHALL BE CONSIDERED TO HAVE BEEN STABILIZED WHEN EXPOSED SURFACES HAVE BEEN EITHER MULCHED WITH STRAW AT A RATE OF 100 LB. PER 1,000 SQUARE FEET (WITH OR WITHOUT SEEDING) OR DORMANT SEEDED, MULCHED AND ADEQUATELY ANCHORED BY AN APPROVED ANCHORING TECHNIQUE. IN ALL CASES, MULCH SHALL BE APPLIED SUCH THAT SOIL SURFACE IS NOT VISIBLE THROUGH THE MULCH.

6. DURING PERIODS OF ABOVE–FREEZING TEMPERATURES, THE SLOPES SHALL BE FINE GRADED AND EITHER PROTECTED WITH MULCH OR TEMPORARILY SEEDED AND MULCHED UNTIL SUCH TIME AS THE FINAL TREATMENT CAN BE APPLIED. IF THE DATE IS AFTER NOVEMBER 1ST AND IF THE EXPOSED AREA HAS BEEN LOAMED, FINAL GRADED AND IS SMOOTH, THEN THE AREA MUST BE STABILIZED WITH MULCH. IF CONSTRUCTION CONTINUES DURING FREEZING WEATHER, ALL EXPOSED AREAS SHALL BE GRADED BEFORE FREEZING AND THE SURFACE TEMPORARILY PROTECTED FROM EROSION BY THE APPLICATION OF MULCH. SLOPES SHALL NOT BE LEFT EXPOSED OVER THE WINTER OR ANY OTHER EXTENDED TIME OF WORK SUSPENSION UNLESS TREATED IN THE ABOVE MANNER. UNTIL SUCH TIME AS WEATHER CONDITIONS ALLOW DITCHES TO BE FINISHED WITH THE PERMANENT SURFACE TREATMENT, EROSION SHALL BE CONTROLLED BY THE INSTALLATION OF BALES OF HAY OR STONE CHECK DAMS IN ACCORDANCE WITH THE STANDARD DETAILS.

7. THE APPLICATION OF MULCH TO FINE GRADED AREAS REQUIRING STABILIZATION WILL BE AS FOLLOWS:

   A) BETWEEN THE DATES OF NOVEMBER 1ST AND APRIL 15TH ALL MULCH SHALL BE ANCHORED BY EITHER PEG LINE, MULCH NETTING, ASPHALT EMULSION, CHEMICAL TACK OR WOOD CELLULOSE FIBER.

   B) MULCH NETTING SHALL BE USED TO ANCHOR MULCH IN ALL DRAINAGE WAYS WITH A SLOPE GREATER THAN 3% FOR SLOPES EXPOSED TO DIRECT WINDS AND FOR ALL OTHER SLOPES GRATER THAN 8%.

   C) MULCH NETTING SHALL BE USED TO ANCHOR MULCH IN ALL AREAS WITH SLOPES GREATER THAN 15%. AFTER OCTOBER 1ST, THE SAME APPLIES FOR ALL SLOPES GREATER THAN 8%.

8. AFTER NOVEMBER 1ST THE CONTRACTOR SHALL APPLY MULCH AND ANCHORING ON ALL BARE EARTH AT THE END OF EACH WORKING DAY.

9. ALL AREAS TO RECEIVE MULCH SHALL BE CLEARED OF SNOW.

APPLICATIONS AND MEASURES

THE PLACEMENT OF EROSION CONTROL MEASURES SHALL BE COMPLETED IN ACCORDANCE WITH SET GUIDELINES ESTABLISHED IN BEST MANAGEMENT PRACTICES, THE EROSION CONTROL PLAN AND DETAILS IN THE PLAN SET.

1. STABILIZED CONSTRUCTION ENTRANCE/EXIT:

   PRIOR TO CLEARING AND/OR GRUBBING THE SITE A STABILIZED CONSTRUCTION ENTRANCE/EXIT SHALL BE CONSTRUCTED WHEREVER TRAFFIC WILL EXIT THE CONSTRUCTION SITE ONTO A PAVED ROADWAY IN ORDER TO MINIMIZE THE TRACKING OF SEDIMENT AND DEBRIS FROM THE CONSTRUCTION SITE ONTO PUBLIC ROADWAYS. THE ENTRANCES AND ADJACENT ROADWAY AREAS SHALL BE PERIODICALLY SWEPT OR WASHED TO FURTHER MINIMIZE THE TRACKING OF MUD, DUST OR DEBRIS FROM THE CONSTRUCTION AREA. STABILIZED CONSTRUCTION EXIT LOCATIONS SHALL BE APPROVED BY THE CITY AND ENGINEER.

2. TEMPORARY VEGETATION AND MULCH:

   IF FINAL SEEDING OF THE DISTURBED AREAS IS NOT COMPLETED BY SEPTEMBER 15TH OF THE YEAR OF CONSTRUCTION, THEN ON THAT DATE THESE AREAS WILL BE GRADED AND SMOOTHED, THEN SEEDED TO A WINTER COVER CROP OF RYE AT THE RATE OF 112 LBS/ACRE OR 3 LBS/1,000 SQUARE FEET AND MULCHED AT A RATE OF 70 LBS/1,000 SQUARE FEET. THE RYE SEEDING WILL BE PROCEEDED BY AN APPLICATION OF 3 TONS OF LIME AND 1,000 LBS OF 10–10–10 FERTILIZER PER ACRE, OR ITS EQUIVALENT. IF THE RYE SEEDING DOES NOT MAKE ADEQUATE GROWTH TO PROVE AT LEAST 75% VEGETATIVE COVER BY NOVEMBER 15TH, THEN ON THAT DATE A TEMPORARY MULCH OF HAY WILL BE APPLIED TO THAT AREA AT A RATE OF 150 LBS/1,000 SQUARE FEET. AREAS STABILIZED WITH RYE AND MULCH WILL BE TILLED AND RESEEDED USING THE VEGETATION PLAN FOR PERMANENT SEEDING THE FOLLOWING SPRING. FINAL VEGETATION OF THE SITE SHALL NOT BE CONSIDERED COMPLETE UNTIL EACH DISTURBED AREA NOT TO BE PAVED OR TREATED WITH RIPRAP HAS A VEGETATIVE COVER OVER AT LEAST 90% OF ITS SURFACE.

   ALL AREAS SEEDED DURING THE WINTER MONTHS WILL BE INSPECTED IN THE SPRING FOR ADEQUATE CATCH. ALL AREAS INSUFFICIENTLY VEGETATED (LESS THAN 75% CATCH) SHALL BE REVEGATATED BY REPLACING LOAM, SEED AND MULCH. IF DORMANT SEEDING IS NOT USED FOR THE SITE, ALL DISTURBED AREAS SHALL BE REVEGETATED IN THE SPRING.

   TEMPORARY MULCH WILL BE APPLIED TO ALL EXPOSED SOIL SURFACES WITHIN FOURTEEN (14) DAYS OF EXPOSURE OR PRIOR TO ANY STORM EVENT.

3. SOIL STOCKPILES:

   STOCKPILES OF SOIL OR SUBSOIL SHALL BE MULCHED WITH HAY AT A RATE OF 75 LBS/1,000 SQUARE FEET (1.5 TONS PER ACRE) OR WITH A FOUR–INCH LAYER OF WOOD WASTE EROSION CONTROL MIX. THIS WILL BE DONE WITHIN 24 HOURS OF STOCKING AND REESTABLISHED PRIOR TO ANY RAINFALL. ANY SOIL STOCKPILE WILL NOT BE PLACED (EVEN COVERED WITH HAY OR STRAW) WITHIN 100 FEET FROM ANY NATURAL RESOURCES.

4. SEDIMENT BARRIERS:

   PRIOR TO THE BEGINNING OF ANY CONSTRUCTION, SILT FENCING SHALL BE STAKED ACROSS THE SLOPE(S), ON THE CONTOUR AT OR JUST BELOW THE LIMITS OF CLEARING OR GRUBBING, AND/OR JUST ABOVE ANY ADJACENT WATERCOURSE TO PROTECT AGAINST CONSTRUCTION RELATED EROSION. MAXIMUM STAKE SPACING OF 6 FEET SHALL BE USED.

   ALL SILT FENCE SHALL BE INSPECTED, REPLACED AND/OR REPAIRED WEEKLY, AS WELL AS IMMEDIATELY FOLLOWING ANY SIGNIFICANT RAINFALL, OR WHEN SEDIMENT REACHES 1/3 THE BARRIER HEIGHT. ALL HAY BALE, FILTER FABRIC BARRIERS SHALL REMAIN IN PLACE UNTIL SEEDINGS HAVE BECOME 75% ESTABLISHED AND THEN REMOVED WITHIN 10 DAYS.

   ANY SILT FENCE IDENTIFIED BY THE OWNER OR REVIEWING AGENCIES AS NOT BEING PROPERLY INSTALLED DURING CONSTRUCTION SHALL BE IMMEDIATELY REPAIRED IN ACCORDANCE WITH THE INSTALLATION DETAILS.

5. STORM DRAIN INLET PROTECTION:

   SILT SACKS OR HAY BALES SHALL BE PLACED AROUND A STORM DRAIN DROP INLET OR CURB INLET PRIOR TO PERMANENT STABILIZATION OF THE IMMEDIATE AND UPSTREAM DISTURBED AREAS. THEY SHALL BE CONSTRUCTED IN A MANNER THAT WILL FACILITATE CLEAN–OUT AND DISPOSAL OF TRAPPED SEDIMENTS AND MINIMIZE INTERFERENCE WITH CONSTRUCTION ACTIVITIES. ANY RESULTANT PONDING OF WATER FROM THE PROTECTION METHOD MUST NOT CAUSE EXCESSIVE INCONVENIENCE OR DAMAGE TO ADJACENT AREAS OR STRUCTURES. INSTALL SILT SACKS AND HAY BALES IN ACCORDANCE WITH THE DETAILS AND PER MANUFACTURER'S RECOMMENDATIONS.

6. DUST CONTROL:

   DUST CONTROL DURING CONSTRUCTION SHALL BE ACHIEVED BY THE USE OF A WATER TRUCK TO PERIODICALLY SPRINKLE THE EXPOSED ROADWAY AREAS AS NECESSARY TO REDUCE DUST DURING THE DRY MONTHS. APPLYING OTHER DUST CONTROL PRODUCTS SUCH AS CALCIUM CHLORIDE OR OTHER MANUFACTURED PRODUCTS ARE ALLOWED IF AUTHORIZED BY THE PROPER LOCAL, STATE AND/OR FEDERAL REGULATING AGENCIES. HOWEVER, IT IS THE CONTRACTOR'S ULTIMATE RESPONSIBILITY TO MITIGATE DUST AND SOIL LOSS FROM THE SITE.

7. PERMANENT VEGETATION:

   REVEGETATION MEASURES SHALL COMMENCE IMMEDIATELY UPON COMPLETION OF FINAL GRADING OF AREAS TO BE LOAMED AND SEEDED. PERMANENT REVEGETATION MEASURES INCLUDING LOAM, SEED AND MULCH SHALL MEET SECTION 615 OF THE SPECIFICATIONS.

WETLAND NOTES

1. WETLANDS AND SURFACE WATERS (EXCEPT THOSE WHICH ARE TO BE FILLED IN ACCORDANCE WITH STATE AND FEDERAL REGULATIONS) SHALL BE PROTECTED WITH SILT FENCE INSTALLED AT THE EDGE OF THE WETLAND OR THE BOUNDARY OF WETLAND DISTURBANCE.

2. IF THE WORK INCLUDES CROSSING OF WETLANDS AND/OR STREAMS, THE CONTRACTOR SHALL TAKE SPECIAL PRECAUTIONS WORKING IN THESE AREAS.

3. ANY WETLAND CROSSING WORK SHALL BE COMPLETED BETWEEN THE PERIOD OF MAY 1 AND SEPTEMBER 30.

4. ALL EROSION CONTROL MEASURES SHALL BE IN PLACE PRIOR TO COMMENCING CONSTRUCTION WITHIN OR ADJACENT TO WETLAND AREAS.

5. WETLAND VEGETATIVE LAYERS SHALL BE REMOVED AND SALVAGED FOR RESTORATION OF THE DISTURBED AREAS.

6. STORAGE AREAS FOR WETLAND MATERIALS SHALL BE PROPERLY PROTECTED AGAINST EROSION.

7. SEEDING OF THE DISTURBED AREAS WITHIN WETLAND AREAS SHALL UTILIZE MIXTURES APPROPRIATE FOR WETLAND AREAS AS OUTLINED IN THE SPECIFICATIONS.

TRENCH DEWATERING

1. EXCAVATION AND INSTALLATION OF THE TIDE GATE, DRAINS AND SEWERS, AND ASSOCIATED STRUCTURES WILL REQUIRE CONTINUOUS DEWATERING THROUGHOUT CONSTRUCTION. CONTRACTOR IS RESPONSIBLE FOR PREPARING AND IMPLEMENTING A DEWATERING PLAN MEETING ENVIRONMENTAL REGULATIONS AND REQUIREMENTS STIPULATED WITHIN THE CONTRACT DOCUMENTS AND PLANS. PRIOR TO CONSTRUCTION, THE CONTRACTOR SHALL SUBMIT A WRITTEN DEWATERING PLAN AND SHALL MEET WITH THE CITY REPRESENTATIVES TO REVIEW THE DEWATERING PLAN. THE CONTRACTOR SHALL MAKE ADJUSTMENTS TO THE DEWATERING PLAN AS REQUIRED BY THE CITY OR OTHER AGENCIES. ANY REQUIRED CHANGES SHALL BE CONSIDERED INCIDENTAL TO THE COST OF DEWATERING AND NO EXTRA PAYMENT WILL BE MADE. ALL DEWATERING SHALL BE RUN THROUGH A PUMPED SEDIMENT REMOVAL SYSTEM EQUAL TO "DIRT BAG" OR ALTERNATIVE METHODS AS APPROVED BY THE ENGINEER. IT IS ANTICIPATED THAT HIGH VOLUMES OF PUMPING WILL BE REQUIRED FOR THE PROJECT. DISCHARGE LOCATIONS SHALL BE APPROVED BY THE ENGINEER PRIOR TO CONSTRUCTION. THE CONTRACTOR SHALL BE RESPONSIBLE FOR ALL WORK AND COSTS ASSOCIATED WITH DEWATERING THE JOBSITE INCLUDING ANY CHANGES, MODIFICATIONS OR SPECIAL DEWATERING SYSTEMS/REQUIREMENTS TO ENSURE THE SITE IS DEWATERED. THIS WORK SHALL BE CONSIDERED INCIDENTAL TO THE RELATED PAY ITEMS. WATER FROM CONSTRUCTION TRENCH DEWATERING WILL PASS FIRST THROUGH A SEDIMENT COLLECTION BAG PRIOR TO DISCHARGE. THE DISCHARGE SITE SHALL BE SELECTED TO AVOID FLOODING AND SEDIMENT DISCHARGES TO A PROTECTED RESOURCE. IN NO CASE SHALL THE SEDIMENTATION COLLECTION BAG BE LOCATED WITHIN 100 FEET OF A PROTECTED NATURAL RESOURCE UNLESS OTHERWISE APPROVED BY THE OWNER.

MONITORING

1. MAINTENANCE MEASURES WILL BE APPLIED AS NEEDED DURING THE ENTIRE CONSTRUCTION CYCLE. WEEKLY AND AFTER EACH RAINFALL, A VISUAL INSPECTION WILL BE MADE BY THE CONTRACTOR OF ALL INSTALLED EROSION CONTROL MEASURES AND REPAIRS WILL BE MADE AS NEEDED TO ENSURE THEIR CONTINUING FUNCTION AS DESIGNED. FOLLOWING THE FINAL SEEDINGS, THE SITE WILL BE INSPECTED EVERY FIFTEEN DAYS UNTIL THE SEEDINGS HAVE BEEN ESTABLISHED. ESTABLISHED MEANS A MINIMUM OF 75% OF AREA VEGETATED WITH VIGOROUS GROWTH. RESEEDING WILL BE CARRIED OUT, WITH FOLLOW UP INSPECTIONS, IN THE EVENT OF ANY FAILURES. ALL EROSION CONTROL MEASURES WILL BE REMOVED WITHIN 10 DAYS WHEN VEGETATION IS ADEQUATELY ESTABLISHED.

STATE OF MAINE
STEVEN GUERRETTE
14384
LICENSED
6/29/18
PROFESSIONAL ENGINEER

Civil 3D 2014 Drawing Name:
Civil 3D 2014 Survey Database:
Civil 3D 2014 Data Shortcuts:

REFERENCES:

REVISIONS:

DESIGNED BY:	SLG
DRAWN BY:	CGH
CHECKED BY:	RTW
SCALE:	AS NOTED
DATE:	06/29/18

STATE OF MAINE
RYAN TODD INNGARD
NO. 21147
LICENSED
PROFESSIONAL ENGINEER

DIAMOND TIDE GATE PROJECT

EROSION CONTROL NOTES

CITY OF PORTLAND, MAINE
PUBLIC WORKS DEPARTMENT
ENGINEERING DIVISION

CITY OF PORTLAND, MAINE
RESURGAM

SHEET # 3 OF 7

PLAN NUMBER C-2

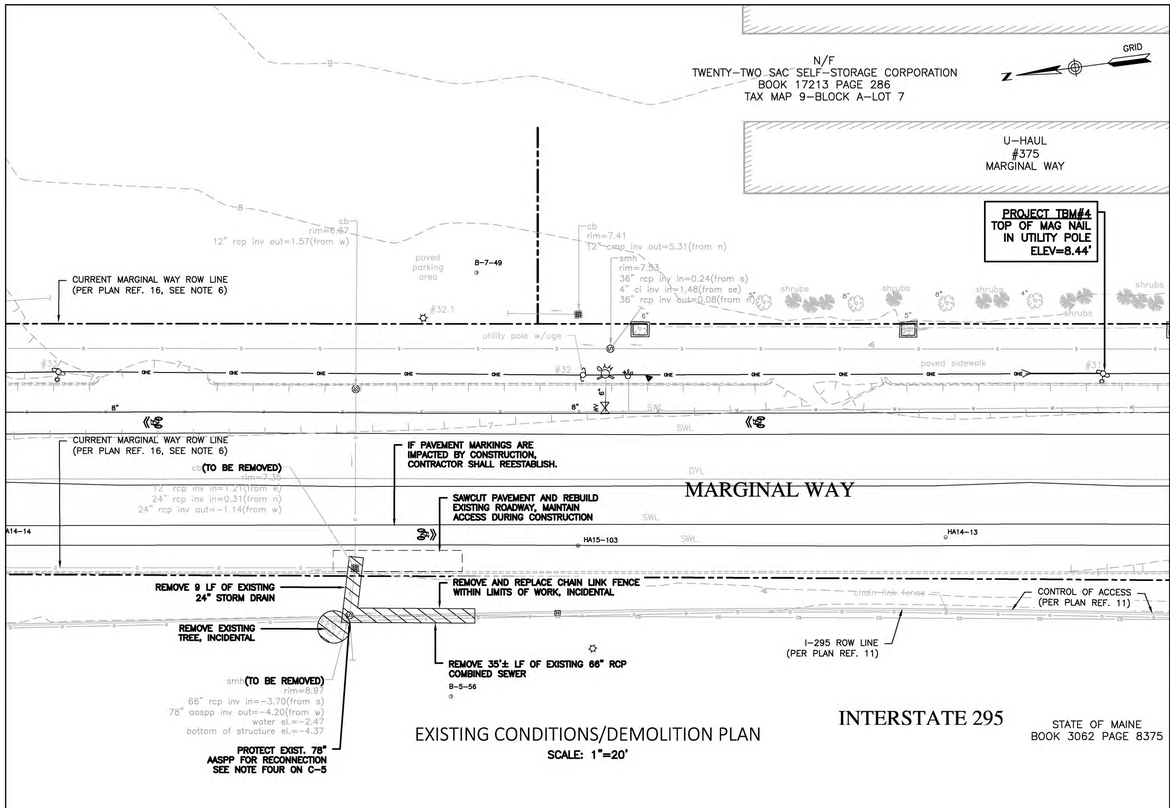

EXISTING CONDITIONS/DEMOLITION PLAN

SCALE: 1"=20'

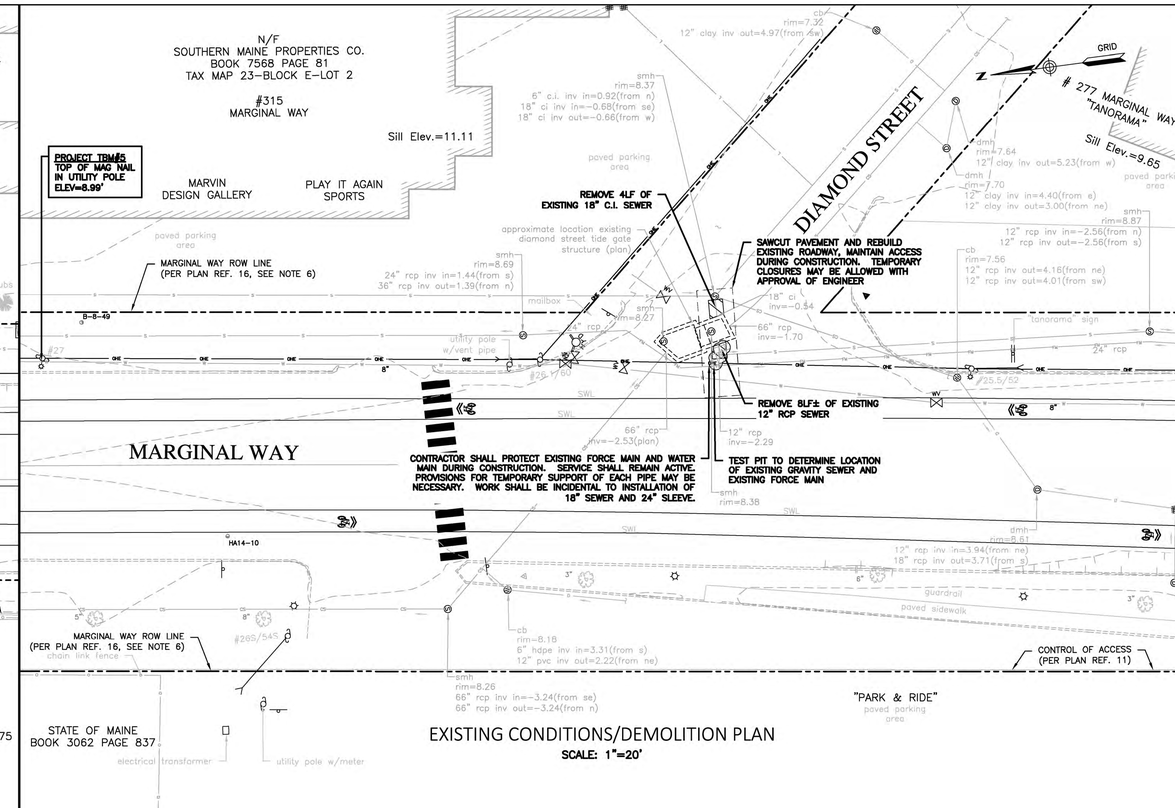

EXISTING CONDITIONS/DEMOLITION PLAN

SCALE: 1"=20'

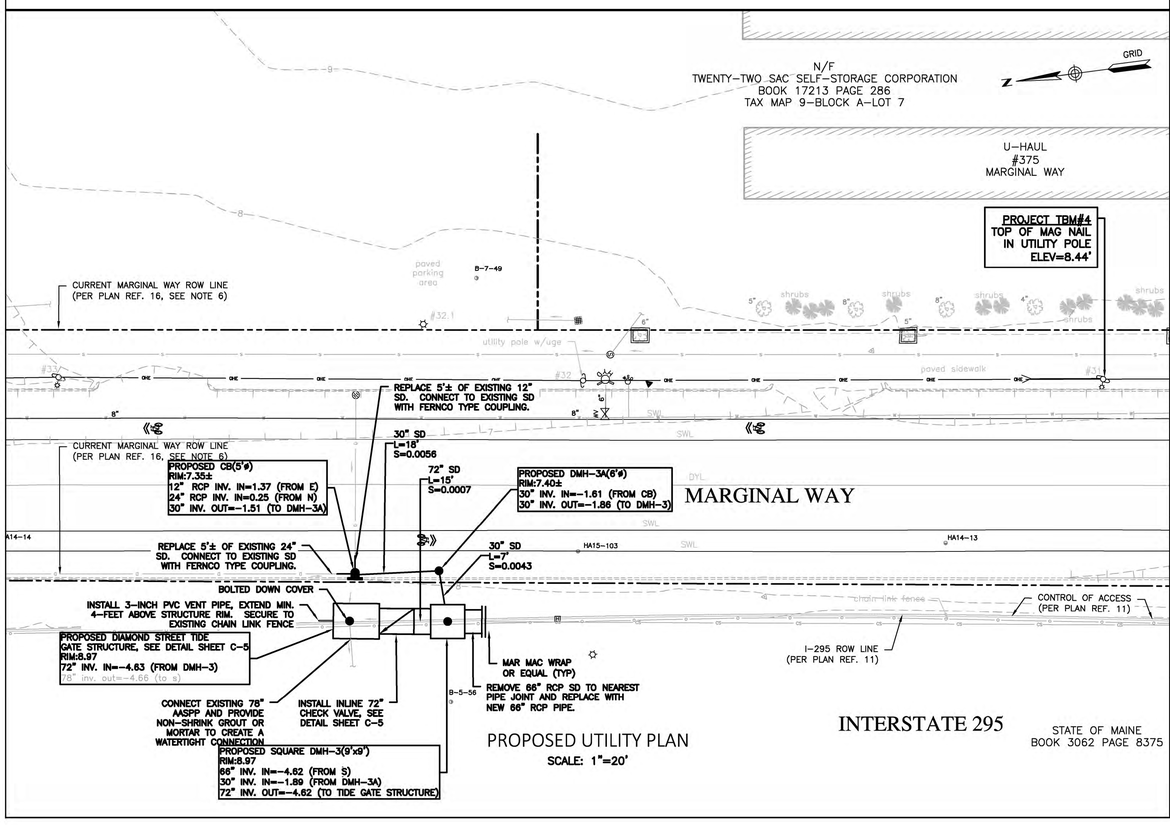

PROPOSED UTILITY PLAN

SCALE: 1"=20'

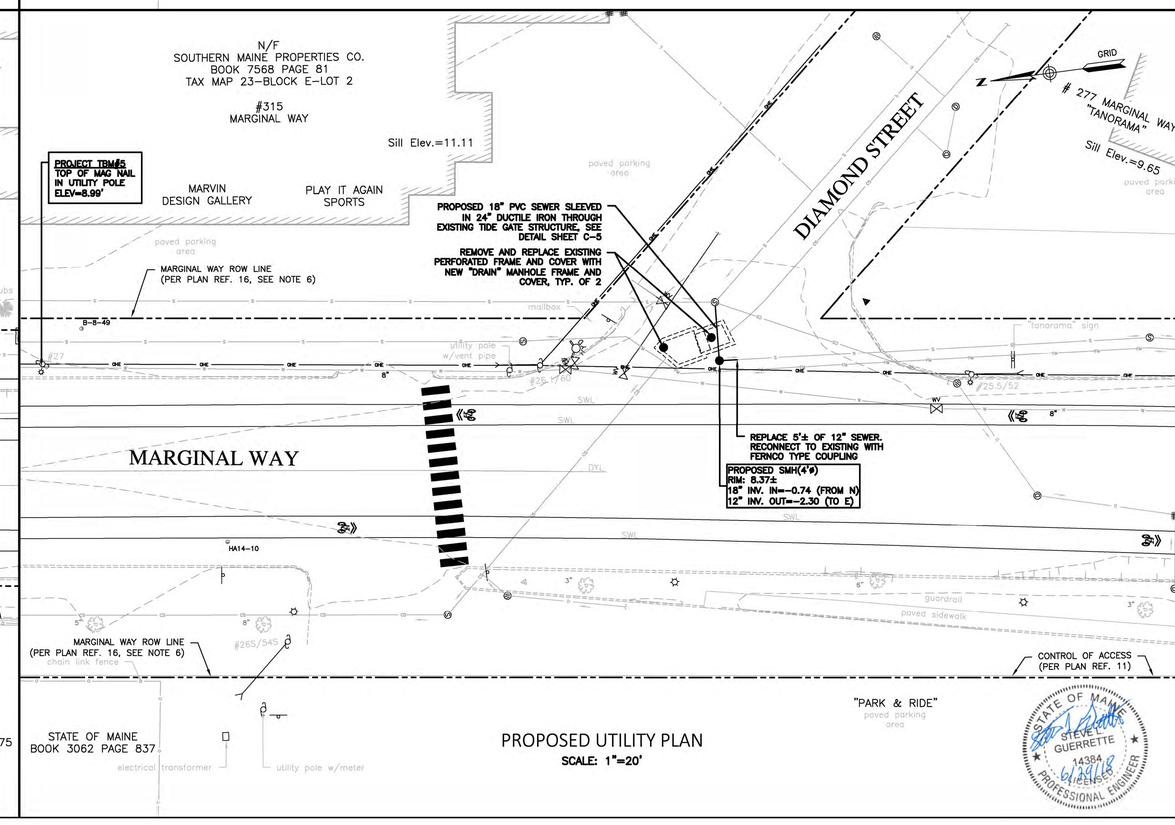

PROPOSED UTILITY PLAN

SCALE: 1"=20'

Civil 3D 2014 Drawing Name:

Civil 3D 2014 Survey Database:

Civil 3D 2014 Data Shortcuts:

REFERENCES:

REVISIONS:

DESIGNED BY:	SLG
DRAWN BY:	CGH
CHECKED BY:	RTW
SCALE:	AS NOTED
DATE:	06/29/18

STATE OF MAINE
RYAN TODD WINGARD
NO. 21147
LICENSED
PROFESSIONAL ENGINEER

DIAMOND TIDE GATE PROJECT

EXISTING CONDITIONS, DEMOLITION AND PROPOSED UTILITY PLAN - DIAMOND

CITY OF PORTLAND, MAINE
PUBLIC WORKS DEPARTMENT
ENGINEERING DIVISION

CITY OF PORTLAND, MAINE
RESURGAM

STATE OF MAINE
STEVEN J. GUERRETTE
14384
LICENSED
PROFESSIONAL ENGINEER
6/29/18

SHEET # 4 OF 7

PLAN NUMBER C-3

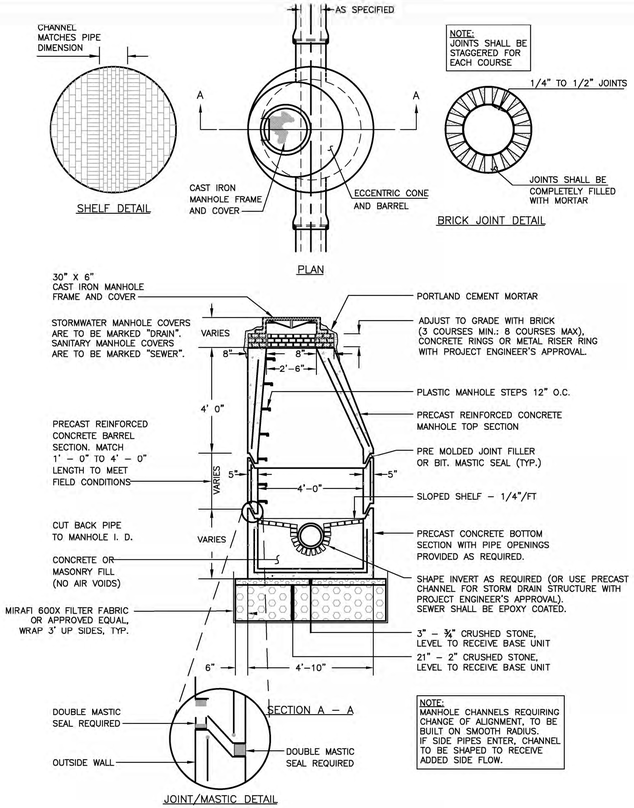

PRECAST CONCRETE MANHOLE TYPE "A"

NOT TO SCALE

NOTES:

1. ALL SANITARY MANHOLE COVERS SHALL HAVE "SEWER" CAST INTO THE COVER. ALL STORMWATER/DRAIN MANHOLE COVERS SHALL HAVE "DRAIN" CAST INTO THE COVER.
2. INSTALL 30" BOLT DOWN FRAME AND COVER ON DIAMOND TIDE GATE STRUCTURE. BOLT DOWN FRAME AND COVER SHALL BE NEENAH FOUNDRY COMPANY R–1916–H BOLTED AND GASKETED, OR APPROVED EQUAL. COVER AND FRAME SHALL INCORPORATE A GASKET OR SEATING RING TO PREVENT THE INGRESS AND ESCAPE OF AIR AND WATER TO 14 PSI POSITIVE OR NEGATIVE RATING. FRAME AND COVER SYSTEM SHALL EXCEED H–20 AASHTO LOAD RATING AND FRAME FLANGE SHALL INCORPORATE BOLT HOLES.
3. APPROVED MANHOLE FRAMES:
   3.1. EAST JORDAN = 2006Z,
   3.2. NEENAH = R–1743
   3.3. OR APPROVED EQUAL
4. APPROVED MANHOLE COVERS
   4.1. EAST JORDAN = 2006A1 EITHER "SEWER" OR "DRAIN"
   4.2. NEENAH = R–1743 EITHER "SEWER" OR "DRAIN"
   4.3. OR APPROVED EQUAL

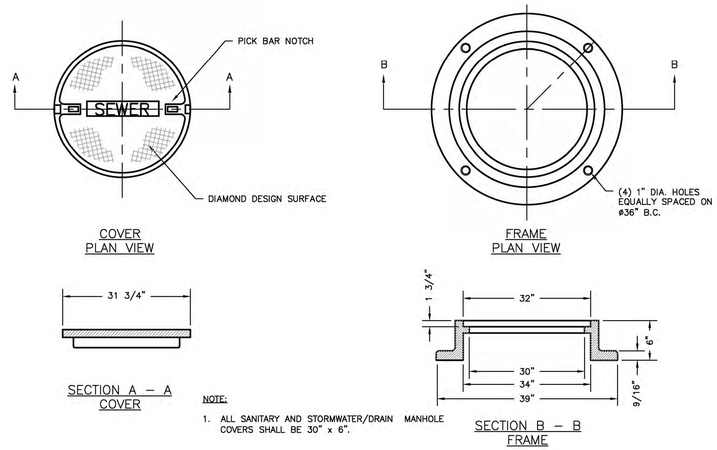

NOTE:

1. ALL SANITARY AND STORMWATER/DRAIN MANHOLE COVERS SHALL BE 30" x 6".

CAST IRON MANHOLE COVER AND FRAME

NOT TO SCALE

1. APPROVED CATCH BASIN FRAMES:
   1.1. EAST JORDAN = 7375Z
   1.2. NEENAH = R–3248
   1.3. OR APPROVED EQUAL
2. APPROVED CATCH BASIN GRATES
   2.1. EAST JORDAN = 2440M
   2.2. NEENAH = R–3248
   2.3. OR APPROVED EQUAL

STATE OF MAINE STEVE L. GUERRETTE 14384 LICENSED PROFESSIONAL ENGINEER 6/29/18

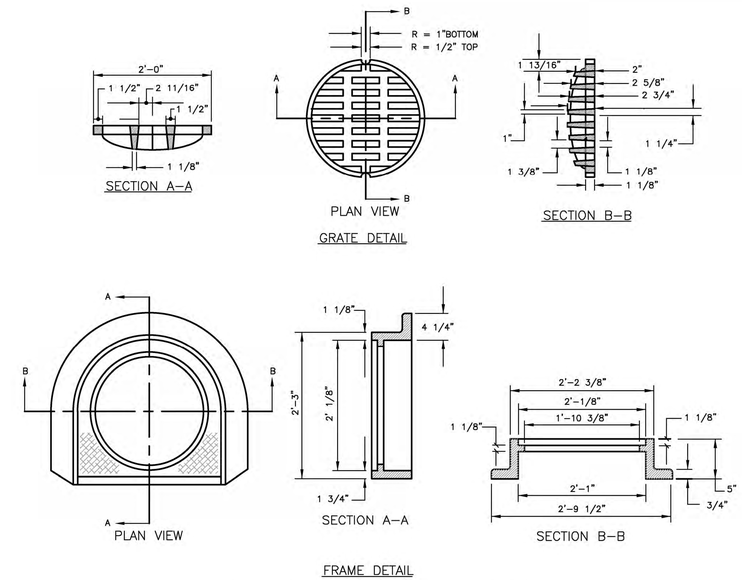

CATCH BASIN TYPE "D" FRAME & GRATE

NOT TO SCALE

GENERAL NOTES FOR MANHOLES AND CATCH BASINS

1. ALL CONCRETE SHALL BE CLASS "A" AND HAVE A MINIMUM ULTIMATE COMPRESSIVE STRENGTH OF 4000 LBS. PER SQ. INCH AT THE END OF 28 DAYS, UNLESS OTHERWISE NOTED.
2. MANHOLES MAY BE CONSTRUCTED OF MASONRY, PRECAST REINFORCED CONCRETE, OR CAST IN PLACE.
3. PRECAST REINFORCED CONE BARREL MANUFACTURED PER ASTM SPEC. C–478–67.
4. ALL STORM AND SEWER MANHOLE COVERS SHALL BE SOLID.
5. ALL SANITARY MANHOLE COVERS SHALL HAVE "SEWER" CAST INTO THE COVER. ALL STORMWATER/DRAIN MANHOLE COVERS SHALL HAVE "DRAIN" CAST INTO THE COVER.
6. SEWER BRICK SHALL CONFORM TO ASTM SPEC. DESIGNATE ON C–32–63, GRADE MA AND SA.
7. ALL SANITARY MANHOLES SHALL HAVE A WATERPROOFING COATING APPLIED TO THE EXTERIOR SURFACE.
8. CASTINGS SHALL CONFORM TO ASTM DESIGNATION A48–CLASS 35.
9. EXISTING MANHOLES, CATCH BASINS, FRAMES, AND COVERS SHALL BE SALVAGED BY THE CONTRACTOR, AND SHALL REMAIN THE PROPERTY OF THE CITY OF PORTLAND.
10. ALL 12" DIAMETER CATCH BASIN OUTLETS SHALL BE INSTALLED WITH A CATCH BASIN HOOD. HOODS SHALL NOT BE INSTALLED ON MAIN LINE THROUGH CATCH BASINS.
11. ALL CATCH BASINS SHALL BE INSTALLED WITH 3' SUMPS, UNLESS NOTED OTHERWISE.

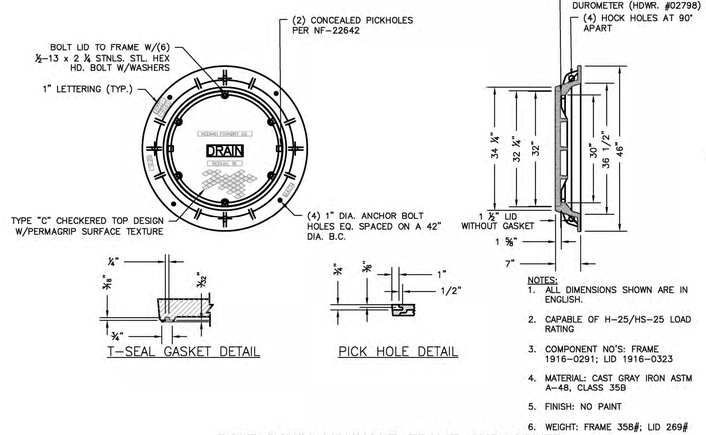

NOTES:

1. ALL DIMENSIONS SHOWN ARE IN ENGLISH.
2. CAPABLE OF H–25/HS–25 LOAD RATING
3. COMPONENT NO'S: FRAME 1916–0291; LID 1916–0323
4. MATERIAL: CAST GRAY IRON ASTM A–48, CLASS 35B
5. FINISH: NO PAINT
6. WEIGHT: FRAME 358#; LID 269#

BOLT DOWN MANHOLE FRAME AND COVER DIAMOND TIDE GATE STRUCTURE

NOT TO SCALE

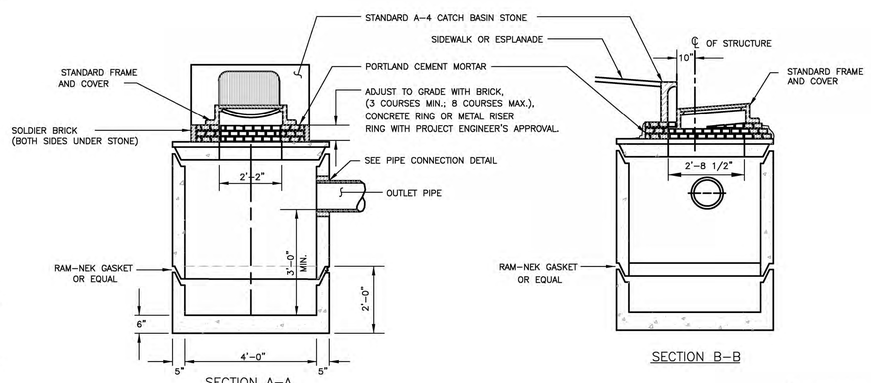

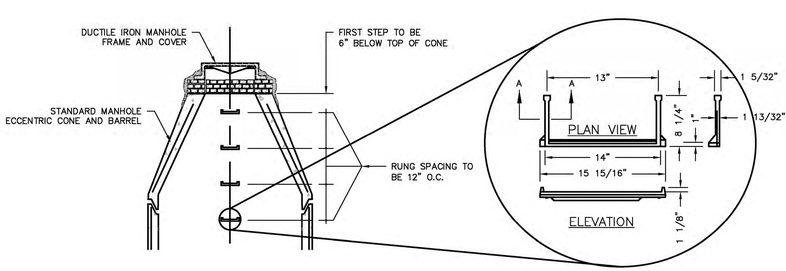

PLASTIC MANHOLE STEPS

NOT TO SCALE

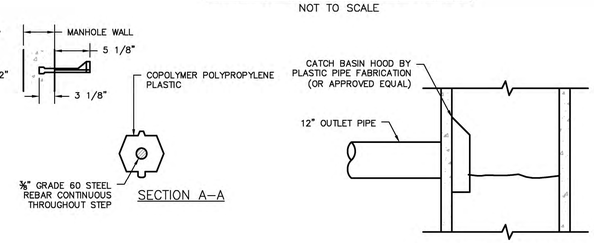

PPF CATCH BASIN HOOD

NOT TO SCALE

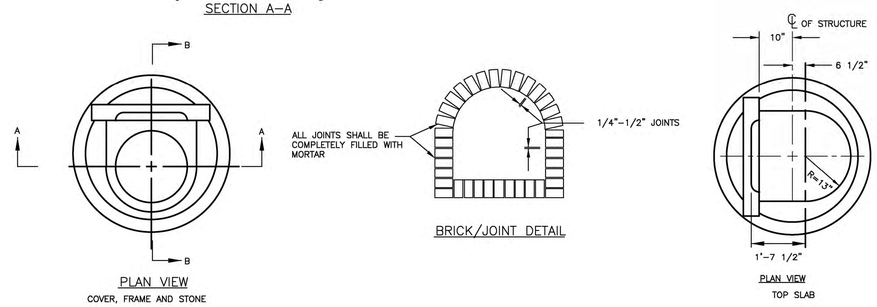

PRECAST CONCRETE CATCH BASIN – TYPE "E"

NOT TO SCALE

Civil 3D 2014 Drawing Name:
Civil 3D 2014 Survey Database:
Civil 3D 2014 Data Shortcuts:

REFERENCES:

REVISIONS:

DESIGNED BY:	SLG
DRAWN BY:	CGH
CHECKED BY:	RTW
SCALE:	AS NOTED
DATE:	06/29/18

STATE OF MAINE RYAN TODD WINGARD NO. 21147 LICENSED PROFESSIONAL ENGINEER

DIAMOND TIDE GATE PROJECT

CONSTRUCTION DETAILS

CITY OF PORTLAND, MAINE
PUBLIC WORKS DEPARTMENT
ENGINEERING DIVISION

CITY OF PORTLAND, MAINE – RESURGAM

SHEET # 5 OF 7

PLAN NUMBER C-4

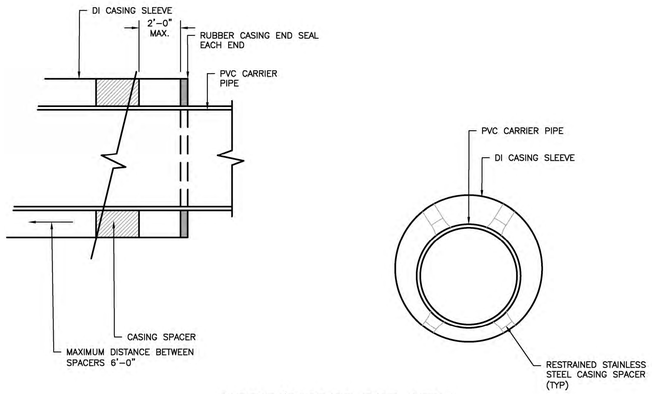

SLEEVE/CARRIER PIPE DETAIL

NOT TO SCALE

NOTES – ALL STRUCTURES:

1. THE FOLLOWING GUIDELINES SHALL BE USED BY THE CONTRACTOR TO SUBGRADE SOILS DURING CONSTRUCTION
   - A. MAKE FINAL EXCAVATIONS TO SUBGRADE LEVEL USING SMOOTH–BLADED EQUIPMENT TO MINIMIZE THE POTENTIAL OF DISTURBANCE. EXCAVATIONS WITHIN 12" OF THE DESIGN SUBGRADE LEVEL SHALL BE PERFORMED WITH CARE.
   - B. THE EXPOSED SUBGRADE SURFACE SHALL BE EXAMINED IN THE FIELD BY THE ENGINEER PRIOR TO CRUSHED STONE PLACEMENT. ADDITIONAL EXCAVATION MAY BE NECESSARY TO REMOVE LOCALIZED AREAS OF WEAK, DISTURBED OR OTHERWISE UNACCEPTABLE SOILS.
   - C. EQUIPMENT AND WORKER TRAFFIC SHALL NOT BE ALLOWED ON THE SUBGRADE SURFACE UNTIL IT HAS BEEN EXAMINED BY THE ENGINEER.
   - D. PREVENT WATER FROM ACCUMULATING ON SUBGRADE SURFACES TO REDUCE THE POSSIBILITY OF SOIL SOFTENING. SUBGRADE SURFACES THAT BECOME DISTURBED DUE TO WATER INFILTRATION SHALL BE CAREFULLY RE–EXCAVATED AND REPLACED AT NO ADDITIONAL COST TO THE CITY
   - E. THE CONTRACTOR SHALL NOT EXCAVATE WITHIN 12" OF THE SUBGRADED LEVEL UNTIL THEY ARE READY TO PLACE THE CRUSHED STONE LAYER AND ADD GEOSYNTHETIC FABRIC. THIS LAYER SHALL BE PLACED OVER THE SUBGRADE THE SAME DAY THAT IT IS EXPOSED.
   - F. ANY SUBGRADE SURFACES THAT BECOME DISTURBED AS A RESULT OF CONTRACTOR MEANS AND METHODS THAT DIFFER FROM THE SPECIFIED HEREIN SHALL BE OVEREXCAVATED AND REPLACED AT NO ADDITIONAL COST TO THE CITY.
2. STRUCTURES MAY BE WITHIN TIDALLY INFLUENCED AREAS. CONTRACTOR SHALL BE RESPONSIBLE TO ADDRESS TIDAL CONDITIONS THROUGH WORK SCHEDULE TIMES, DEWATERING OR OTHER MEANS SUCH THAT EXCAVATION AND BACKFILLING ACTIVITIES CONDUCTED IN–THE–DRY. DEWATERING OR OTHER MEANS SHALL BE INCIDENTAL TO STRUCTURE INSTALLATION. REFER TO SUPPLEMENTAL SPECIFICATION 656 AND 656 (DEWATERING) FOR DETAILS.
3. EXCAVATION, SHORING, DEWATERING, STONE BEDDING, COMMON BORROW, STRUCTURAL FILL, ROADWAY BASE AND SUBBASE SHALL BE INCIDENTAL TO STRUCTURE INSTALLATION (REFER TO CONTRACT SPECIFICATIONS).
4. AASPP = ALUMINUM ALLOY STRUCTURAL PLATE PIPE. PLEASE NOTE THAT 78–INCH DIAMETER AASPP IS CONSTRUCTED WITH A 5% ± ELLIPTICAL SHAPE IN THE VERTICAL DIRECTION. CONTRACTOR SHALL VERIFY ACTUAL DIMENSIONS OF PIPE BEFORE CASTING TIDE GATE STRUCTURES. OVERSIZED HOLES MAY BE REQUIRED.
5. PRECAST MANUFACTURER SHALL PROVIDE EMBEDDED LIFTING EYES WITHIN REMOVABLE TOP SLABS.

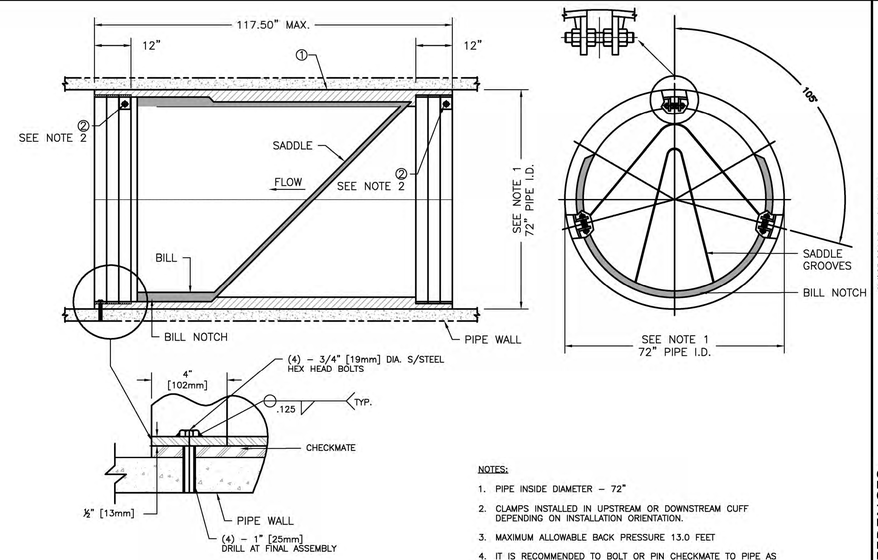

PIN PER NOTE #4
RECOMMENDED PINNING CONFIGURATION
(SUPPLIED BY CONTRACTOR) (SEE I.O.M.)
NOT TO SCALE

NOTES:

1. PIPE INSIDE DIAMETER – 72"
2. CLAMPS INSTALLED IN UPSTREAM OR DOWNSTREAM CUFF DEPENDING ON INSTALLATION ORIENTATION.
3. MAXIMUM ALLOWABLE BACK PRESSURE 13.0 FEET
4. IT IS RECOMMENDED TO BOLT OR PIN CHECKMATE TO PIPE AS SHOWN, 4 PLACES 90° APART.
5. AASPP= ALUMINUM ALLOY STRUCTURE PLATE PIPE

72" ULTRAFLEX CHECKMATE CHECK VALVE

NOT TO SCALE

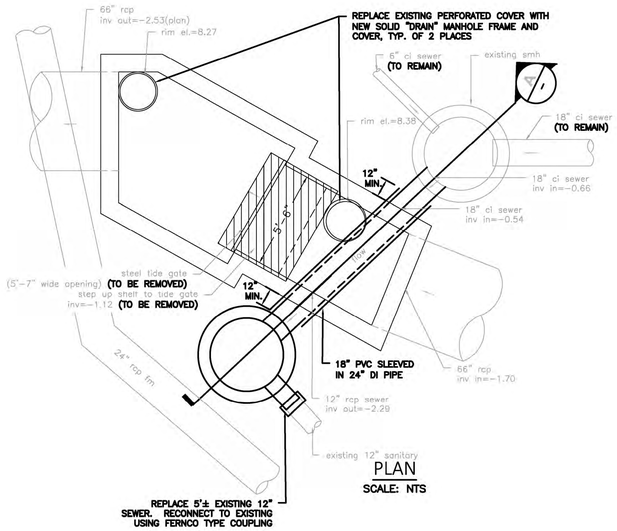

PLAN

SCALE: NTS

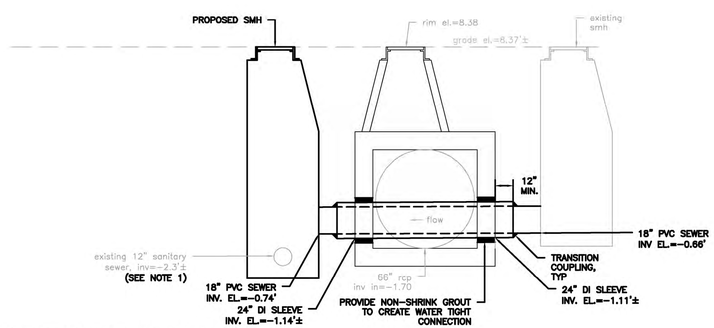

NOTES:

1. CONTRACTOR SHALL FIELD VERIFY INVERT ELEVATIONS OF EXISTING 12" SEWER AND 18" SEWER PRIOR TO FABRICATION OF PROPOSED SEWER MANHOLE AND DI SLEEVE.
2. CONTRACTOR SHALL PROVIDE AND INSTALL PIPE SUPPORTS AS NEEDED FOR CARRIER SLEEVE PIPING, SEE DETAIL THIS SHEET.
3. CONTRACTOR SHALL PROPERLY MAINTAIN AND MANAGE ALL SANITARY FLOW DURING CONSTRUCTION AND MUST MAINTAIN CONTINUOUS SANITARY SERVICE AT ALL TIMES.

SECTION-A

SCALE: NTS

EXISTING DIAMOND STREET TIDE GATE STRUCTURE

NOT TO SCALE

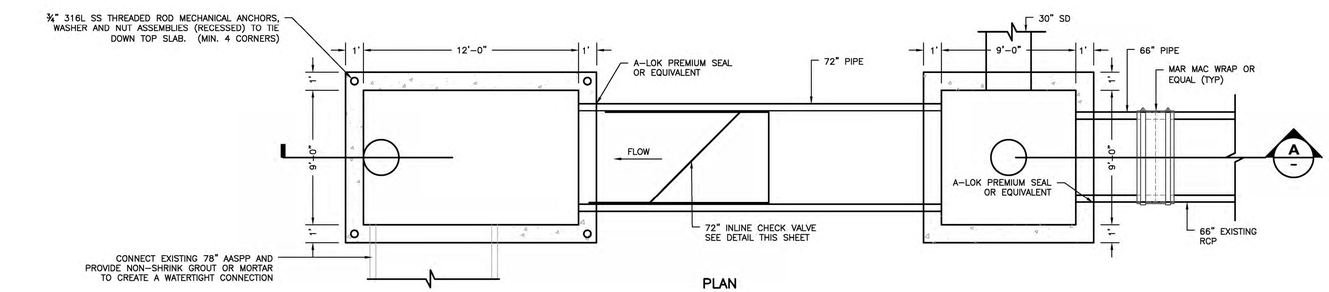

PLAN

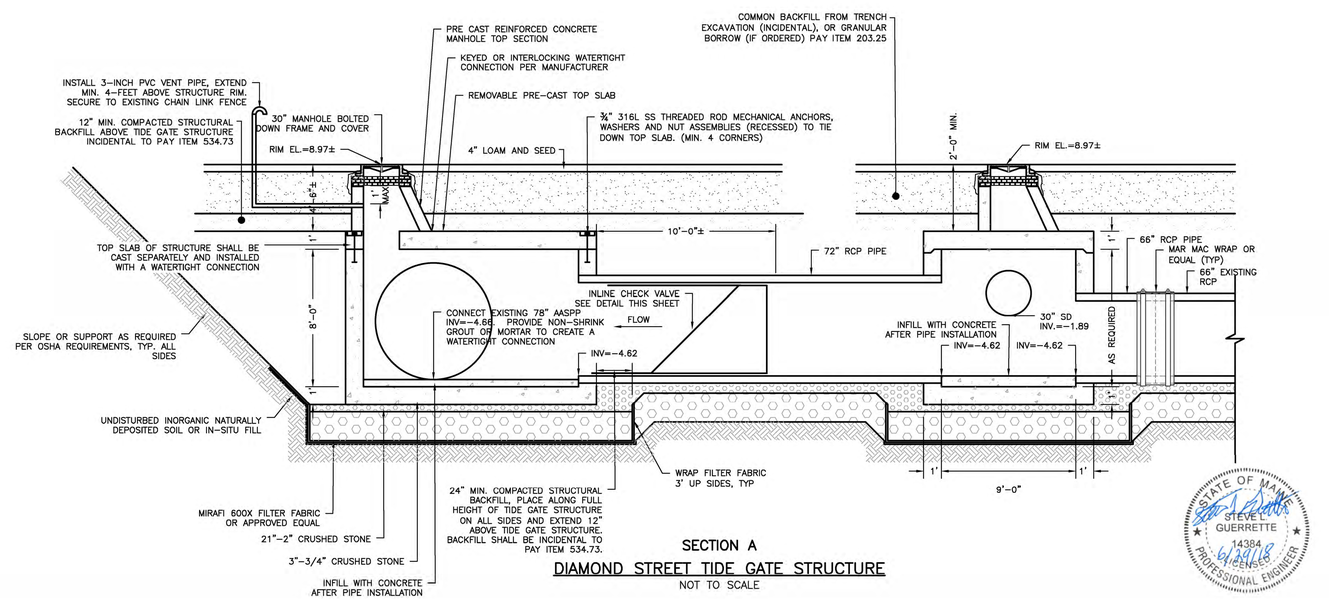

SECTION A

DIAMOND STREET TIDE GATE STRUCTURE

NOT TO SCALE

STATE OF MAINE
STEVE L. GUERRETTE
14384
LICENSED
PROFESSIONAL ENGINEER
6/29/18

Civil 3D 2014 Drawing Name:
Civil 3D 2014 Survey Database:
Civil 3D 2014 Data Shortcuts:

REFERENCES:

REVISIONS:

DESIGNED BY:	SLG
DRAWN BY:	CGH
CHECKED BY:	RTW
SCALE:	AS NOTED
DATE:	06/29/18

STATE OF MAINE
RYAN TODD MARGARD
NO. 11717
LICENSED
PROFESSIONAL ENGINEER

DIAMOND TIDE GATE PROJECT

CONSTRUCTION DETAILS

CITY OF PORTLAND, MAINE
PUBLIC WORKS DEPARTMENT
ENGINEERING DIVISION

CITY OF PORTLAND, MAINE
RESURGAM

SHEET # 6 OF 7

PLAN NUMBER C-5

NOTES

1. ALTERNATIVE CONSTRUCTION METHODS OR PAYMENT METHODS SHALL BE APPROVED IN ADVANCE BY THE CITY.
2. IN PAVED AREAS, DEPTHS OF GRAVEL AND HOT MIX ASPHALT PAVEMENT SHALL MATCH THE GREATER OF EXISTING CONDITIONS OR THE REQUIREMENTS FOR THE CORRESPONDING STREET CLASSIFICATION.
3. DIMENSION **B** SHALL BE SUFFICIENT TO ALLOW CRUSHED STONE BEDDING TO BE PLACED AND COMPACTED UNDER THE HAUNCHES OF THE PIPE; BUT IN ALL CASES DIMENSION **B** SHALL BE AT LEAST 9".
4. DIMENSION **A** IS THE MAXIMUM WIDTH ALLOWED FOR CALCULATING PAY QUANTITIES UNDER GRANULAR BORROW, CRUSHED STONE, STRUCTURAL EARTH EXCAVATION, AND STRUCTURAL ROCK EXCAVATION. DIMENSION **A** SHALL BE BASED ON PIPE DIAMETER **D**, AS SET FORTH IN THE FOLLOWING TABLE.
5. EXCAVATION BELOW ESTABLISHED TRENCH PROFILE (IF ORDERED). PAY ITEM 206.061
6. EXCAVATION INCIDENTAL TO PIPE PAY ITEMS (PAVED AND SEEDED AREAS).
7. DEPTH OF BITUMINOUS PAVEMENT AND AGGREGATE COURSES SHALL BE DETERMINED BY PAVEMENT SECTION ON THIS SHEET.
8. ANY ALTERNATE TRENCHING OR PAYMENT METHODS SHALL BE APPROVED IN ADVANCE BY THE CITY OF PORTLAND, DEPARTMENT OF PUBLIC WORKS.

PIPE DIAMETER, "D" (INCHES)	MAX. TRENCH WIDTH, "A" (FEET)	PAVEMENT WIDTH OUTSIDE TRENCH, "C" (FEET)
4	4.0	2.5
6	4.0	2.5
8	4.0	2.5
10	4.0	2.5
12	5.0	2.5
15	5.0	2.5
18	5.0	2.0
21	5.0	2.0
24	6.0	1.75
27	6.0	1.5
30	6.0	1.5
36	6.0	1.0
42	7.0	1.0
48	7.0	1.0
66	8.0	1.0
72	8.0	1.0

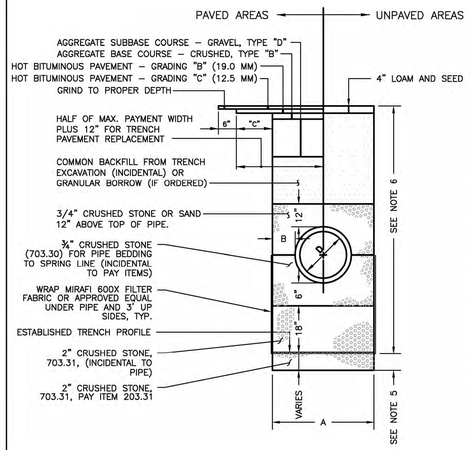

TYPICAL PIPE INSTALLATION DETAIL
NOT TO SCALE

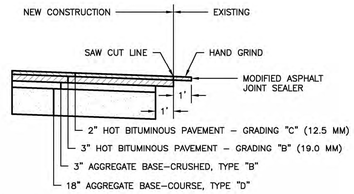

TYPICAL PAVEMENT REPAIR SECTION
NOT TO SCALE

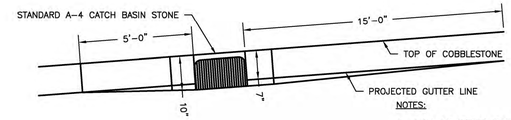

NOTES:

1. DISH 10" EITHER SIDE OF HEADSTONE FOR CATCH BASIN AT LOW POINT.

TYPICAL PAVEMENT GRADING ON SLOPES FOR CATCH BASIN & INLET
NOT TO SCALE

NOTE:

LOCATIONS AND ELEVATIONS OF STUBS SHOWN ON THE PLANS ARE TO BE CONSIDERED AS APPROXIMATE AND MAY BE ADJUSTED AS DIRECTED TO SUIT FIELD CONDITIONS.

HOUSE CONNECTIONS AND CATCH BASINS CONNECTIONS TO THE MAIN LINE OF THE SEWER, SHALL CONSIST OF AN APPROPRIATE "Y" BRANCH CONNECTION AS SHOWN ON THE PLANS, OR AS DIRECTED. ACTUAL "Y" LOCATIONS FOR HOUSE CONNECTIONS AND CATCH BASIN CONNECTIONS SHALL BE DETERMINED DURING CONSTRUCTION. THE CONTRACTOR SHALL KEEP A COMPLETE RECORD OF "Y" LOCATIONS WHICH SHALL BE GIVEN TO THE CITY OF PORTLAND UPON COMPLETION OF THE CONTRACT.
ALL PVC TO PVC COUPLING SHALL BE "SOLID PVC COUPLINGS".

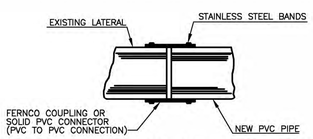

FERNCO COUPLING FOR REPAIR OR REPLACEMENT
NOT TO SCALE

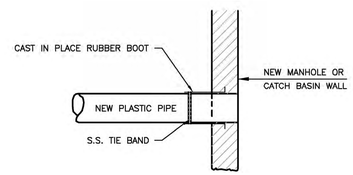

METHOD 2 – NEW CONSTRUCTION

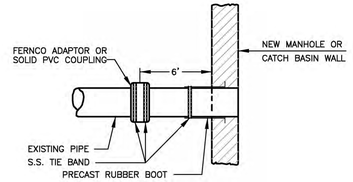

METHOD 1 – EXISTING PIPE INTO NEW STRUCTURE

PLASTIC PIPE CONNECTIONS
NOT TO SCALE

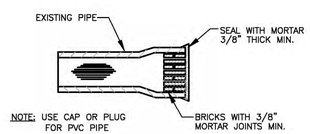

MASONRY PLUG
NOT TO SCALE

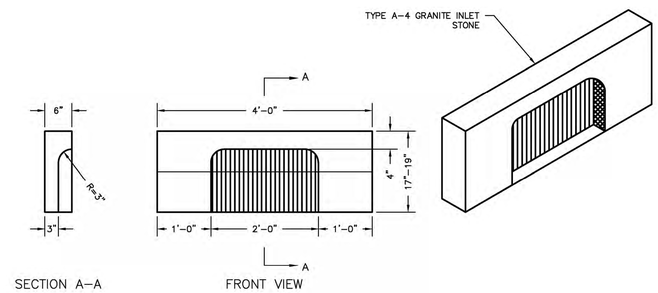

TYPE A–4 GRANITE CATCH BASIN INLET STONE
NOT TO SCALE

STATE OF MAINE STEVEN L. GUERRETTE 14384 LICENSED PROFESSIONAL ENGINEER 6/29/18

Civil 3D 2014 Drawing Name:
Civil 3D 2014 Survey Database:
Civil 3D 2014 Data Shortcuts:

REFERENCES:

REVISIONS:

DESIGNED BY: SLG
DRAWN BY: CGH
CHECKED BY: RTW
SCALE: AS NOTED
DATE: 06/29/18

STATE OF MAINE RYAN TODD WINGARD NO. 11487 LICENSED PROFESSIONAL ENGINEER

DIAMOND TIDE GATE PROJECT

CONSTRUCTION DETAILS

CITY OF PORTLAND, MAINE
PUBLIC WORKS DEPARTMENT
ENGINEERING DIVISION

CITY OF PORTLAND, MAINE – RESURGAM

SHEET # 7 OF 7

PLAN NUMBER C-6