CATCH AND RELEASE!

TIDE & TEMPEST.

Casco Bay is characterized by beautiful steep rocky shorelines, but low-lying areas like Bayside are flood threatened by high tides and heavy rains. Especially when these events combine at once. Maine's sea level rise since 1912 is similar to the global average. A 1' increase is likely by the middle of this century, and possibly over 3' by 2100. (1) Increasingly volatile climate and weather patterns mean Bayside can expect more extreme storm, tide, and heavy rain combinations at the same time.

A TIMELY RESPONSE.

The Back Cove tidal inlet, with it's narrow channel below Tukey's Bridge, offers a natural buffer opportunity to neatly manage the effects of both tide & tempest. A tidal barrier would allow high tides and high storm runoff to be managed as separate events. High tides can be held away from Bayside, when necessary. Heavy rain can be caught in Back Cove, for release when the tide allows.

LITTLE POND, BIG FISH.

Catching the flood problem releases Bayside to develop its coastal urban edge and allow public and private amenities to offer a great work-and-play environment. A tidal barrier can generate power on ebb and flood tides, or form a reversing fall where urban kayakers test their mettle. The greatest cost for tidal barrier power is usually the embankment (2) , but Back Cove is almost entirely enclosed already. With a permanent flood solution in place a flexible time frame for other changes is possible. I-295 could be lowered and converted to an urban boulevard (3). Enhanced tidal edges around Back Cove can offer further flood protection, water quality improvements, wildlife habitats, and recreational amenities (4).

Refs:

1. Sea Level Rise and Casco Bay's W etlands - Casco Bay Estuary Partnership, 2013
2. Tidal Energy Technology Brief – International Renewable Energy Agency, 2014
3. Growing Portland: Not W hether, but How. Case Study I-295 to Ground – University of Southern Maine, 2017
4. Swansea Bay Tidal Lagoon (tidallagoonpower.com/projects/swansea-bay)

TIDAL BARRIER

Bayside Adapts

Board 1 Catch & Release - Tukey's Bridge

Soren Deniord, Soren Deniord Design Studio
Richard Lo, Kaplan Thompson Architects
Danielle Foisy, Kaplan Thompson Architects

Bayside Adapts	Board 2	Catch & Release - Interventions
	Soren Deniord, Soren Deniord Design Studio Richard Lo, Kaplan Thompson Architects Danielle Foisy, Kaplan Thompson Architects	

BAYSIDE ENHANCED TIDAL EDGE

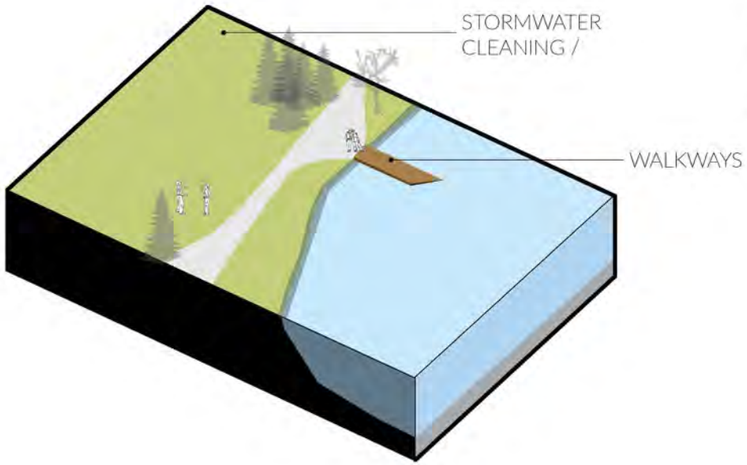

- Variety of hard & soft edges
- Water access
- Estuarine habitats
- Water quality improvements

FRANKLIN ARTERIAL STORM CASCASDE

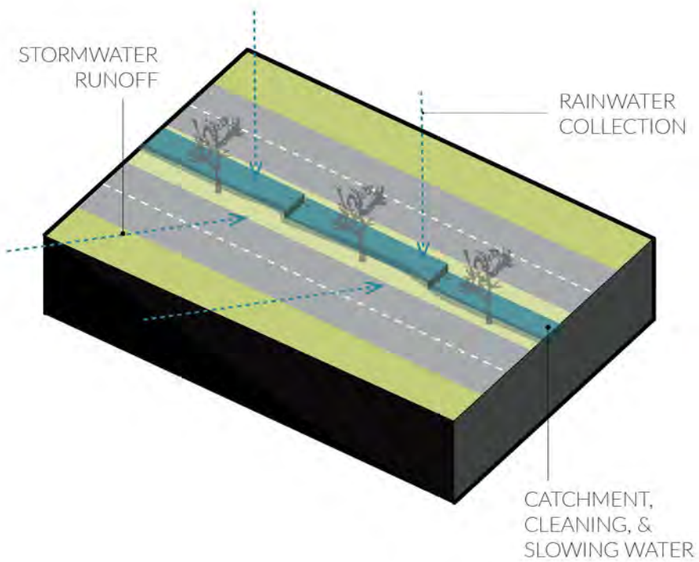

- Divert surface run-off from Munjoy Hill & Bayside to Franklin Arterial center strip
- Retention basins hold & slow down storm run-off flowing into Back Cove
- Improve water quality entering Back Cove
- Landscape Franklin Arterial strip

TUKEY'S BRIDGE TIDAL BARRIER HOLDING STORM RUN-OFF

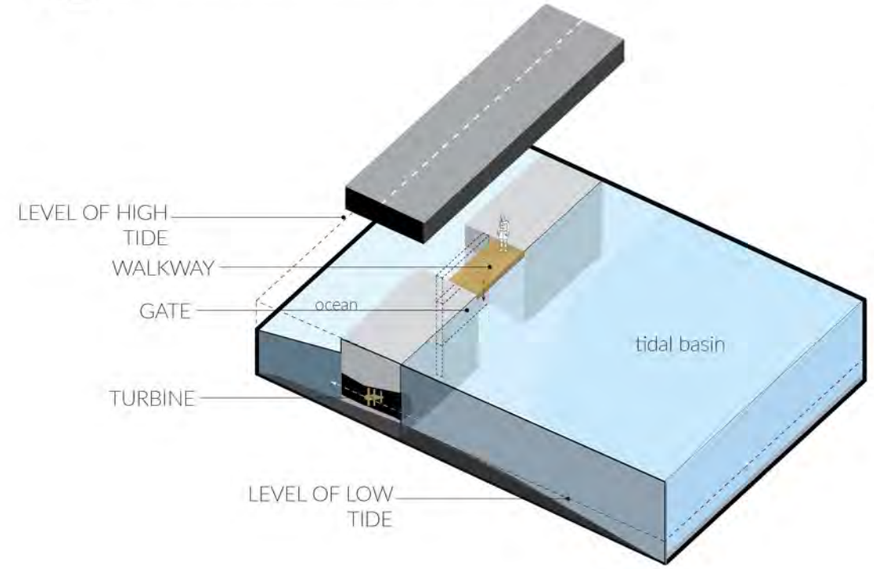

- A barrier below Tukey's Bridge allows control of both tidal surges & stormwater run-off, at the same time if necessary
- Power generator as Back Cove fills & empties (tidal barrier turbines move slowly, so are not a hazard to fish)
- Reversing tidal plume provides an artificial Kayak course
- Barrier wier as hydro art

TUKEY'S BRIDGE TIDAL BARRIER DURING STORM SURGES

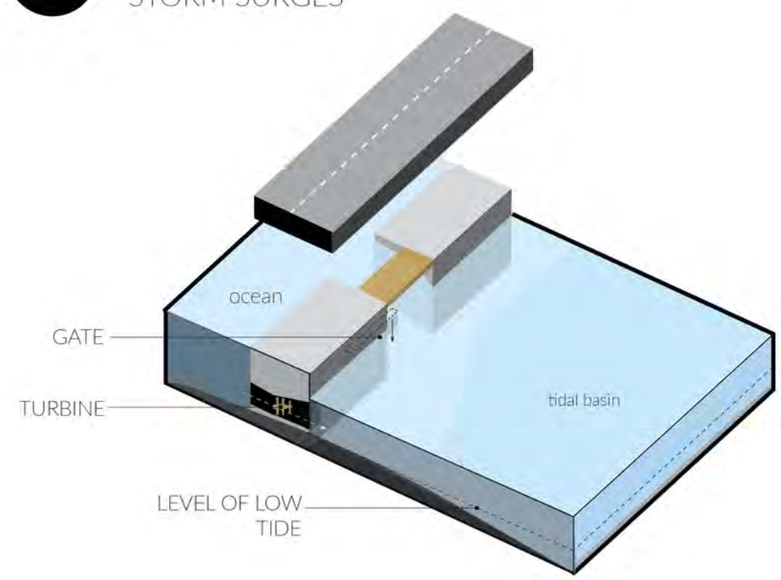

Bayside Adapts	Board 3	Catch & Release - Diagrams
	Soren Deniord, Soren Deniord Design Studio Richard Lo, Kaplan Thompson Architects Danielle Foisy, Kaplan Thompson Architects	

Bayside Adapts

Board 4 | Catch & Release - Franklin Arterial View

Soren Deniord, Soren Deniord Design Studio
Richard Lo, Kaplan Thompson Architects
Danielle Foisy, Kaplan Thompson Architects