1. Legal Ad

   Documents:

   PB LEGAL AD 5-17-18.PDF

2. Agenda

   Documents:

   PB AGENDA 5-17-18.PDF

3. 178 Kennebec Street

   Documents:

   KENNEBEC ST. - 178 (MEMO).PDF
   KENNEBEC ST. - 178 (REPORT ATTACHMENTS).PDF
   KENNEBEC ST. - 178 (APPLICANTS SUBMITTAL).PDF
   KENNEBEC ST. - 178 (PLANS).PDF

4. 1006 Congress Street

   Documents:

   CONGRESS ST. - 1006 (MEMO).PDF
   CONGRESS ST. - 1006 (MEMO ATTACHMENTS).PDF
   CONGRESS ST. - 1006 (APPLICANTS SUBMITTAL).PDF
   CONGRESS ST. - 1006 (PLANS).PDF

5. Section 14-403

   Documents:

   14-403 (REPORT AND ATTACHMENTS).PDF
   14-403 (PUBLIC COMMENTS).PDF

6. 82 Hanover Street

   Documents:

   HANOVER ST. - 82 (REPORT).PDF
   HANOVER ST. - 82 (REPORT ATTACHMENTS).PDF
   HANOVER ST. - 82 (APPLICANTS SUBMITTAL).PDF
   HANOVER ST. - 82 (PLANS).PDF

6.I. Public Comment

   Documents:

   PC1 GEORGE RHEAULT 5-17-18.PDF
   PC2 DAMON YAKOVLEFF 5-16-18.PDF

7. Impact Fees

Documents:

IMPACT FEE (MEMO AND ATTACHMENTS).PDF

LEGAL ADVERTISEMENT
PORTLAND PLANNING BOARD - MEETING AGENDA

The Portland Planning Board will hold a meeting on THURSDAY, MAY 17, 2018, Council Chambers, 2nd Floor, City Hall, 389 Congress Street. Public comments will be taken for each item on the agenda during the estimated allotted time and written comments should be submitted to planningboard@portlandmaine.gov

Workshop – 4:30 p.m.

i. Level III Subdivision and Site Plan; 178 Kennebec Street, Maine Workforce Housing, LLC, Applicant. (postponed from the May 8, 2018 meeting) (4:30-5:30 p.m. estimated time). The Board will hold a workshop to consider a proposal for the development of forty-six one-bedroom senior housing units with 28 affordable units. Parking for 19 vehicles is proposed. The site is in the Residential R-6 zone and is subject to review under the subdivision, site plan, and affordable housing ordinances.

ii. Zoning Map Amendment, IL to B-2, 1006 Congress Street, Richard Packer, Applicant. (5:30 – 6:30 p.m. estimated time) The Board will hold a workshop to consider a proposal for a zoning map amendment to rezone 1006 Congress Street from the Industrial I-L to the Community Business B-2 zone. The site is on the corner of Congress and Westfield Streets. The B-2 zone allows for commercial and mixed-use development.

Public Hearing – 7:00 p.m.

i. Level III Site Plan; 82 Hanover Street; Tom Watson & Co., LLC, Applicant. (7:00-8:00 p.m. estimated time). The Board will hold a public hearing to consider the redevelopment of the Department of Public Works auto service/office building into a mixed-use building at 82 Hanover Street. The proposal includes converting the 40,768 sf building into spaces for restaurants, a brewery, offices and retailers. Parking for 39 vehicles and 14 bicycle spaces are proposed. The site is in the B-7 zone and is subject to review under the site plan ordinance.

Evening Workshop (immediately following the public hearing)

i. Impact Fee Study, City of Portland, Applicant. (estimated time 8 p.m.) The Planning Board will meet for a workshop to discuss the city's recently-initiated Impact Fee Study. The purpose of the study is to explore impact fees, which are one-time assessments charged to new development to cover the cost of infrastructure necessitated by that development, as a systematic means of addressing capital costs associated with new growth. This workshop will serve as an introduction to the study.

SEAN DUNDON, CHAIR – PORTLAND PLANNING BOARD

CITY OF PORTLAND, MAINE

PLANNING BOARD

Sean Dundon, Chair
Brandon Mazer, Vice Chair
David Eaton
David Silk
Austin Smith
Maggie Stanley
Lisa Whited

AGENDA
PORTLAND PLANNING BOARD MEETING

The Portland Planning Board will hold a meeting on THURSDAY, MAY 17, 2018, Council Chambers, 2nd Floor, City Hall, 389 Congress Street. **Public comments will be taken for each item on the agenda during the estimated allotted time and written comments should be submitted to planningboard@portlandmaine.gov**

WORKSHOP – 4:30 p.m.

i. Level III Subdivision and Site Plan; 178 Kennebec Street, Maine Workforce Housing, LLC, Applicant. (4:30-5:30 p.m. estimated time). The Board will hold a workshop to consider a proposal for the development of forty-six one-bedroom senior housing units with 28 affordable units. Parking for 19 vehicles is proposed. The site is in the Residential R-6 zone and is subject to review under the subdivision, site plan, and affordable housing ordinances.

ii. Zoning Map Amendment, IL to B-2, 1006 Congress Street, Richard Packer, Applicant. (5:30 – 6:30 p.m. estimated time) The Board will hold a workshop to consider a proposal for a zoning map amendment to rezone 1006 Congress Street from the Industrial I-L to the Community Business B-2 zone. The site is on the corner of Congress and Westfield Streets. The B-2 zone allows for commercial and mixed-use development.

PUBLIC HEARING – 7:00 p.m.

1. ROLL CALL AND DECLARATION OF QUORUM

2. COMMUNICATIONS AND REPORTS

3. REPORT OF ATTENDANCE AT THE MEETING HELD ON MAY 8, 2018:

Workshop: The workshop was cancelled.
Public Hearing: All members were present.

4. REPORT OF DECISIONS AT THE MEETINGS HELD ON MAY 8, 2018:

i. Munjoy Hill Map and Text Amendments, Design Manual Changes & Amendments to Nonconforming Use/Buildings and Space & Bulk Regulations Citywide. Mazer moved and Stanley seconded a motion to amend and approve the B-1 Massing standard of the Design Manual to include the sentence "Special attention shall be given to the existing building massing on both sides of the street within the block of the proposed site." Vote: 7-0. Mazer moved and Stanley seconded a motion that the proposed zoning map and text amendments for the Munjoy Hill Neighborhood Conservation District are consistent with the comprehensive plan and recommends adoption to the City Council. Vote: 7-0. Mazer moved and Stanley seconded a motion that the proposed zoning text amendments to Division 23 regarding nonconforming building extensions are in

conformance with the comprehensive plan and recommends adoption to the City Council. Vote: 7-0. Mazer moved and Stanley seconded a motion to approve the proposed text amendments to the City of Portland Design Manual, Appendix 7, Design Certification Program, as presented. Vote: 7-0

ii. Article 30 – Affordable Housing Amendments; City of Portland, Applicant. Mazer moved and Stanley seconded a motion to find the proposed text amendments to Division 30, Affordable Housing, as presented in Attachment 1 and with the sunset provision to be eliminated, is consistent with the Comprehensive Plan and recommends adoption to the City Council. Vote: 5-2, Eaton and Mazer opposed (supported text amendments, but opposed to eliminating sunset provision). Mazer moved and Stanley seconded a motion to find the proposed text amendments to Division 30, Affordable Housing, is consistent with the Comprehensive Plan and recommends adoption to the City Council. Vote: 0-7, Fails.

iii. Zoning Text Amendment, Section 14-403. Street Access; Portland Corporation Counsel, Applicant. Mazer moved and Stanley seconded a motion to table this item to Thursday, May 17, 2018 at 7:00 p.m. Vote: 7-0

5. OLD BUSINESS

i. Zoning Text Amendment, Section 14-403. Street Access; Portland Corporation Counsel, Applicant. (7:00-8:00 p.m. estimated time) The Board will hold a public hearing on the proposed text amendments to replace the current Section 14-403. The amendments include, but are not limited to, clarifying a building or structure may only be constructed or moved on a lot or a dwelling added to a lot where the minimum street requirements are met for permanently paved and accepted streets (or island streets) and for streets to be upgraded in connection with development.

6. NEW BUSINESS

ii. Level III Site Plan; 82 Hanover Street; Tom Watson & Co., LLC, Applicant. (8:00-9:00 p.m. estimated time). The Board will hold a public hearing to consider the redevelopment of the Department of Public Works auto service/office building into a mixed-use building at 82 Hanover Street. The proposal includes converting the 40,768 sq. ft. building into spaces for restaurants, a brewery, offices and retailers. Parking for 39 vehicles and 14 bicycle spaces are proposed. The site is in the B-7 zone and is subject to review under the site plan ordinance.

7. EVENING WORKSHOP (IMMEDIATELY FOLLOWING THE PUBLIC HEARING)

i. Impact Fee Study, City of Portland, Applicant. (estimated time 9 p.m.) The Planning Board will hold a workshop to discuss the city's recently-initiated Impact Fee Study. The purpose of the study is to explore impact fees, which are one-time assessments charged to new development to cover the cost of infrastructure necessitated by that development, as a systematic means of addressing capital costs associated with new growth. This workshop will serve as an introduction to the study.

Memorandum
Planning and Urban Development Department
Planning Division

To:	Sean Dundon, Chair, and Members of the Portland Planning Board
From:	Shukria Wiar, Planner
Date:	May 11, 2018
Re:	178 Kennebec Street
Project #:	PL-000029-2018
Meeting Date:	May 17, 2018

I. INTRODUCTION

Maine Workforce Housing, LLC has requested a preliminary Level III site plan and subdivision review of a seven-story mixed use building that includes forty-six (46) apartments for elderly residents at 178 Kennebec Street in West Bayside. The proposal also includes nineteen surface parking spaces, sidewalks, and landscaping improvements. The site is currently occupied by a surface parking lot. The proposed building is within the B7 zone.

The Planning Board will review the application for compliance with the site plan and subdivision standards. A total of 56 notices were sent to property owners within 500 feet of the site and a legal ad ran on May 7th and 8th, 2018. No public comments have been received.

Applicant: Nathan Szanton and Amy Cullen, Maine Workforce Housing, LLC and The Szanton Company

Consultants: Michael Tadema-Wielandt, PE, Terradyn Consultants, LLC; David Lloyd, Archetype Architects; Randy Loubier, Owen Haskell Inc.

II. REQUIRED REVIEWS

Waiver Requests	*Applicable Standards*
Aisle width – To allow a 22-foot aisle in the parking area	Technical Manual, *Section 1.14,* requiring that aisle width for right-angle parking be 24 feet per Figure I-27
Street trees – To plant 42 street trees, less than required (4 are proposed along the building)	Site Plan Standard, *Section 14-526(b)2. b (iii)* and Technical Manual, *Section 4.6.1.* All multi-family development shall provide one street tree per unit. Waiver permitted where site constraints prevent it. *46 units = 46 street trees required*
Review	*Applicable Standards*
Site Plan	*Section 14-526*
Subdivision	*Section 14-497*
Workforce Housing Inclusionary Zoning	*14-484 (Applicant is required to have 4.6 units, which is being proposed)*

III. PROJECT DATA

Existing Zoning	Urban Commercial Business B-7
Existing Use	Surface Parking Lot
Proposed Use	Mixed Use- Residential and Retail
Proposed Development Program	46 one-bedroom apartments
Parcel Size	16,553 SF

	Existing	*Proposed*	*Net Change*
Building Footprint	0	6,667 SF	6,667 SF
Building Floor Area	0	46,669 SF	46,669 SF
Impervious Surface Area	14,842 SF	14,757 SF	85 SF
Parking Spaces (on site)	0	19	19
Bicycle Parking Spaces	0	18	18
Estimated Cost of Project			

IV. BACKGROUND & EXISTING CONDITIONS

The site of the proposed project abuts three streets, Kennebec, Brattle and Parris Streets in the Bayside neighborhood. The site is currently occupied by a gravel surface parking lot that has been used as a parking lot for the City's freight vehicles. Nearly the entire site is currently covered with impervious surface including two bituminous driveways from Brattle and Parris Streets. Underground utilities in Kennebec, Brattle and Parris Streets include water, gas, stormdrain and sewer. Overhead power and communication services are on poles located on Kennebec, Brattle and Parris Streets. Along the Brattle Street frontage, there is a flush bituminous sidewalk with no curb. There is also no sidewalk along the site's Parris Street frontage. The existing gravel parking lot on site connects directly to both Brattle and Parris Streets. No on-street parking exists along the site's frontage on Kennebec and Brattle Streets, but there is limited on-street parking available on the western side of Parris Street.

Figure 1: 178 Kennebec Street Site

The uses surrounding the site are mostly residential uses, including some large three-story multi-family housing. Most of the adjacent housing is of a smaller scale, with a mix of single and two-family buildings.

V. PROPOSED DEVELOPMENT

The development is proposed as a mixed use residential and retail project with frontages on Kennebec, Brattle, and Parris Streets.

The proposal is for a seven-story building with a footprint of 6,667 square feet. The first floor will feature a lobby for the residential units, a utility room and trash room, and 5,429 sf of artist studio/retail space. The second through seventh floors will feature 46 one-bedroom apartments ranging from 600 sf to 670 sf. The residential units will be elderly (55+) housing, at least 28 of the units will be affordable housing, and at least 11 of the units will be ADA accessible. The first-floor retail and artists spaces will be accessed from the Kennebec Street frontage and the parking lot located south of the building. The total building floor area is 46,669 square feet. Elevation views and perspective renderings of the proposed building are provided in Attachment 12-14. Tenant and customers parking is to be provided on-site at the rear of the proposed with driveway accesses from Parris and Brattle Streets.

There will be nineteen surface parking spaces as part of the project of which six will be for the retail use. New brick sidewalks are proposed on all the streets. The development includes street trees: three on Kennebec Street and one on Brattle Street. Bicycle parking will be provided on bike racks along the site's frontage on Kennebec, Brattle, and Parris Streets. The mail slots for the apartments will be located in the lobby. The trash room will be accessed from the lobby and from the parking lot for trash removal, and a mechanical room is located adjacent to the lobby on the first floor.

Figure 4: 178 Kennebec Street Rendering Looking West

Figure 5: 178 Kennebec St Rendering Looking East on Kennebec St

VI. PUBLIC COMMENT

As of the writing of this report, one public comment have been received.

VII. RIGHT, TITLE, & INTEREST AND FINANCIAL & TECHNICAL CAPACITY

a. The applicant is Maine Workforce Housing, LLC and has a Joint Development Agreement with Ross Furman. Maine Workforce Housing, LLC is developing the site and building and will retain ownership of the residential units, whereas, Ross Furman will own the first-floor artist studio/retail space. An executed copy of the Joint Development Agreement will need to be provided as soon as it becomes available. Ross Furman has a Purchase and Sale agreement with the City for Lot 1. The deeds and Purchase & Sale are Attachment D. The site plan shows parking spaces across property boundary lines, which needs to be addressed with easements or lot line adjustments in the final application. The project site is comprised of the following parcels and record owners:

Map/Block/Lot	CCRD Book/Page	Record Owner
34/F/ Lot 1	16707/206	City of Portland
34/F/ Lot 2	31408/102	Ross Furman
34/F/ Lot 5	18985/128	New Systems Realty, LLC (Ross Furman)

b. The estimated cost of the development is $6.6 Million. The applicant has submitted a letter stating the financing sources for the project, as demonstration of their financial and technical capacity to complete the proposed development.

VIII. ZONING ANALYSIS

The proposed uses of the mixed-use building are permitted in the Urban Commercial Business B-7 zone. The applicant will need to show documentation as to how they meet the zoning standards and performance standards (Section 14-299 Performance Standards).

For off street parking, Division 20 requires one parking space per unit for residential uses on the peninsula, except in the B-7 zone, where parking requirement can be determined by the Planning Board; the "parking requirement shall be determined based upon a parking analysis submitted by the applicant and upon the recommendation of the city transportation engineer". The B7 zone includes a specific requirement (14-332.2.c) for the submission of a parking analysis and for the Planning Board to establish the parking requirement for the project; staff has requested a parking demand study. A total of nineteen (19) parking spaces is being proposed, of which six are for the commercial/retail use, therefore only thirteen are for the residential use. Three spaces will be handicapped parking spaces.

IX. DEVELOPMENT REVIEW

A. SITE PLAN SUBMISSION REQUIREMENTS (Section 14-527) and SUBDIVISION PLAT AND RECORDING PLAT REQUIREMENTS (Section 14-496)

The applicant has not submitted a subdivision plat and will need to submitted as part of the final application for review and approval. Per the city's land use ordinance, the following materials should be submitted at time of final review:

- A subdivision plat meeting all plat requirements as noted in 14-496; and
- Final plan submittal requirements as noted in 14-527(f) and (g). The final site plan should include:
    - State plane coordinates to the four property corners to be set; and
    - The stamp of a professional engineer.

B. SUBDIVISION (Section 14-497)

The proposed development has been reviewed by staff for conformance with the relevant review standards of Portland's Subdivision Ordinance and applicable regulations. Staff comments are listed below.

1. *Will Not Result in Undue Water and Air Pollution (Section 14-497 (a) 1), and Will Not Result in Undue Soil Erosion (Section 14-497 (a) 4)*
   Lauren Swett, P.E. with Woodard and Curran Engineering, has reviewed the erosion and sediment control plan and states "Locations of sediment barrier should be provided as necessary. Existing grades to the south of the site are not provided, and it is unclear if sediment barrier may be needed along the project boundary" and an updated erosion and sedimentation control plan will need to be submitted; please see Attachment 3 for the complete analysis.

2. *Sufficient Water Available (Section 14-497 (a) 2 and 3)*
   The project will be served by new water service located in Kennebec Street. The Applicant will have to contact the Portland Water District and the City Department of Public Services requesting ability to serve water and sewer demand. Confirmation of ability to serve water and sewer from PWD and DPS should be forwarded to the Planning Authority as part of the final plan.

3. *Will Not Cause Unreasonable Traffic Congestion (Section 14-497 (a) 5)*
   The City is currently finalizing the Bayside Transportation Master Plan, a document that seeks to improve transportation accessibility and connectivity with one of the recommendations consisting of Kennebec Street. The site will be accessed by existing curb cuts on Brattle and Parris Streets; the circulation for the site will consist of two entrances. Some of the parking spaces are encroaching on the abutting property. Tom Errico, P.E. Ty Lin reviewed this detail and also reviewed the proposal's details including the access, parking, and vehicle circulation (Attachment 1) and states the following recommendations:

- *The Kennebec Street curb design does not appear to be consistent with the City's Kennebec Street Improvement Project. The plans shall be revised to reflect to proposed design.*
- *It is my assumption that Bruce Hyman will be providing detailed comments on sidewalk facilities. I would note that the current plan does not depict a ramp at the Parris Street corner and the Brattle Street ramp is not acceptable as depicted. Revisions to match the City project will address these issues.*
- *The driveway for 53 Brattle Street is being eliminated. It is unclear how parking for this lot is being addressed.*
- *A utility pole is being relocated to directly in front of 53 Brattle Street. Details on pedestrian accessibility for the relocated pole should be documented.*
- *The proposed driveway on Parris Street does not comply with City standards for driveway separation. The applicant shall request a formal waiver with supporting documentation.*

Bruce Hyman, Transportation Manager, also conducted a review of the plans, specifically the curbing and bicycle racks, and his complete review is Attachment 3.

4. *Will Provide for Adequate Sanitary Sewer and Stormwater Disposal (Section 14-497 (a) 6), and Will Not Cause an Unreasonable Burden on Municipal Solid Waste and Sewage (Section 14-497 (a) 7)*
The project will be served by a new sewer line located in Kennebec Street. Ms. Swett has reviewed the plans and offers the following recommendations:

> *Additional coordination with the City of Portland is required for sewer and stormdrain connections. The City is proposing a project on Kennebec Street, and connections in Kennebec will require coordination with the City's project, which is anticipated to occur next year. The City has also identified that the stormdrain shown on Parris Street is incorrectly labeled, and that the pipe is actually the Lancaster Street sewer. Stormdrain connections will not be allowed into this line. Stormdrainage may be directed to Kennebec where a stormdrain will be installed next year. It is also noted that the Applicant is proposing three separate stormwater services from their site. While this is allowed, the Applicant may wish to consolidate to reduce the future maintenance requirements. Provide appropriate reference on the plans to the City's project and verify that the proposed work will not be in conflict. The plans should be updated such that project stormwater is not tied into the Lancaster Street sewer.*

5. *Scenic Beauty, Natural, Historic, Habitat and other Resources (Section 14-497 (a) 8)*
The proposal site is not within an historic district. It is in an urban neighborhood surrounded by a variety of residential building types, as well as commercial uses. The proposed building does not impact the natural beauty of the area or adversely affect any significant wildlife habitat, rare or irreplaceable natural areas, or any public access to the shoreline. The staff finds the proposal in conformance with this standard.

6. *Comprehensive Plan (Section 14-497 (a) 9)*
The staff has identified the following goals and policies which are relevant to the proposed housing development and finds the proposal in conformance with the Comprehensive Plan:

Portland Housing Goal: Ensure that an adequate supply of housing is available to meet the needs, preferences, and financial capabilities of all Portland households, now and in the future.

Policies

- Ensure the construction of a diverse mix of housing types that offers a continuum of options across all income levels, which are both renter and owner-occupied, including but not limited to the following:
  ii. Housing units for decreasing household size, such as young professionals, empty nesters, single-parent households, and senior citizens.
- Encourage higher density housing for both rental and home ownership opportunities, particularly located near services, such as schools, businesses, institutions, employers, and public transportation.

- Increase Portland's rental housing stock to maintain a reasonable balance between supply and demand yielding consumer choice, affordable rents, and reasonable return to landlords.
- Identify vacant land and redevelopment opportunities throughout the City to facilitate the construction of new housing.

C. SITE PLAN STANDARDS (Section 14-526)

The proposed development has been reviewed by staff for conformance with the relevant review standards of Portland's site plan ordinance and applicable regulations. Staff comments are listed below.

1. *Transportation Standards*

a. Impact on Surrounding Street Systems and Access and Circulation- see Subdivision, Paragraph VIII (B) (3), above.

b. Construction Management Plan

A construction management plan has been submitted by the applicant for review; this plan needs to meet the new construction management plan standards.

c. Sidewalks

The applicant is proposing to install new brick sidewalk along their frontage on all three streets with street trees and bicycle racks. The project is located in a concrete sidewalk district and plans need to be updated to reflect concrete sidewalks.

d. Public Transit Access

The public transit requirements do not apply to this project.

e. Parking

The applicant is proposing nineteen (19) surface parking spaces that are located at the rear of the property, of which six of the nineteen parking spaces are for the commercial/retail use. The B-7 zone includes a particular requirement (14-332.1.i) that all projects regardless of size shall abide to Section 14-332.2.c for the submission of a parking analysis and for the Planning Board to establish the parking requirement for the project.

> *Sec. 14-332.1. Zone specific off-street parking exceptions and modifications. The off-street parking requirements established for uses, established above in section 14-332 of this division, are hereby modified for the following zones according to the provisions described below.*
>
> > *(i) B-7, Mixed Development District Zone: Off-street parking for all projects regardless of size, shall be governed by 14-332.2(c) of this article.*
>
> *Sec. 14-332.2. Categorical exceptions and modifications to off-street parking requirements. Regardless of which zone a project of use is located, the following exceptions to the off-street parking requirements listed above in section 14-332 are additionally hereby established.*
>
> > *(c) Site plans over 50,000 square feet and projects in the B-6, B-7, and USM Overlay Zones: Where construction is proposed of new structures having a total floor area in excess of fifty thousand (50,000) square feet, the planning board shall establish the parking requirement for such structures. The parking requirement shall be determined based upon a parking analysis submitted by the applicant and upon the recommendation of the city transportation engineer.*

The applicant has not submitted a parking demand study and this will need to be part of the final application. The surface parking lot will have a twenty-two-foot (22') parking aisle width that does

not meet standard of twenty-four feet (24'); therefore, the applicant has requested a waiver. Mr. Errico addresses this in his memo, Attachment 1:

- *Parking spaces meet City dimensional standards. The aisle width does not comply with City standards and thus the applicant shall request a formal waiver with supporting documentation.*
- *It is suggested that short-term 15-minute parking be provided on Parris Street between Kennebec Street and the proposed driveway.*
- *The applicant shall provide information/data that supports the parking demand estimate provided in the application.*
- *The applicant has conducted a trip generation estimate for the project and back-up calculations for all project uses shall be provided. The project will not generate traffic levels that will require a Traffic Movement Permit.*

f. Bicycle Parking

The proposals include eighteen (18) bicycle parking spaces frontages located at building entrances and along the street of Kennebec, Brattle and Parris Streets, which meets the ordinance standard of 2 bicycle spaces per 5 vehicle spaces. All bicycle rack should be located on the property and not in the right of way. Bruce Hyman reviewed the plans and offers the following regarding the bicycle racks:

> *If all the bike racks shown are required to meet the bike parking requirements, please find a replacement for the 'wave rack' shown with one that provides 2 points of contact between the bike frame and bicycle (such as an inverted U-rack). I am not readily able to verify that 18 bike parking spaces are provided on the site (I count 10 spaces using Bike Hitches and an unknown # using the wave rack*

2. *Environmental Quality Standards*

a. Preservation of Significant Natural Features

There are no known significant natural features on the site.

b. Landscaping and Landscape Preservation

The applicant is proposing four street trees in front of the buildings, three on Kennebec Street and one on Brattle Street. The street tree requirement would be one tree per unit, in or near the ROW. The Section 4.6 Street Trees of the Technical Manual does state:

> *If it is determined by the City Arborist that there is not adequate space or conditions for street trees in the public right of way or if there is a conflict between the location of proposed street trees and the location of existing or proposed underground utilities, the required number of street trees shall be provided on private property within 10 feet of the property line along the street frontage.*

The applicant will need to contribute to the City's Tree Fund for the remaining 42 trees.

c. Water Quality, Storm Water Management and Erosion Control

Under Section 5 of the City of Portland Technical Manual, a Level III development project is required to submit a stormwater management plan pursuant to the regulations of MaineDEP Chapter 500 Stormwater Management Rules, including conformance with the Basic, General, and Flooding Standards. Lauren Swett, P.E. with Woodard and Curran Engineering, has reviewed the drainage plan and stormwater report, and offers her recommendations regarding the General and Flooding Standards:

> *There appears to be some misunderstanding of the General and Redevelopment Standard. For projects that do not meet the Chapter 500 thresholds requiring treatment, in the City of Portland, treatment is required if there is greater than 1,000 SF of new impervious surface*

(provide treatment per Ch 500, 95% of impervious treated) or 5,000 SF of redeveloped, non-roof impervious surface (50% of non-roof impervious redeveloped area). The Applicant is proposing treatment of portions of the roof and the parking area, which may be adequate to meet the standard, however, additional clarification is required. Provide a figure that identifies redeveloped non-roof impervious surface. It would be helpful if this figure also shows the areas that are proposed to be treated. Confirm that half of the redeveloped area is being treated. If that area cannot be treated, provide justification (using pollutant rankings) for treatment of other areas (i.e. roof) as an alternative.

The Stormwater Management Plan should include a stormwater inspection and maintenance plan and a stormwater agreement developed in accordance with and in reference to MaineDEP Chapter 500 guidelines and Chapter 32 of the City of Portland Code of Ordinances. Provide stormwater inspection and maintenance plan and proposed agreement.

3. *Public Infrastructure and Community Safety Standards*

a. Consistency with Master Plans

See Subdivision, Paragraph VIII (B)6 above.

b. Public Safety and Fire Prevention

The Crime Prevention through Environmental Design (CPTED) standards in the site plan ordinance address the principles of natural surveillance, access control and territorial reinforcement so that the design of developments enhance the security of public and private spaces and reduce the potential for crime.

The applicant has not submitted a lighting and photometric plan. As a subdivision, street lighting may be required to provide lighting for the area by the entrances and parking spaces. This will be reviewed when a lighting plan is submitted.

c. Availability and Adequate Capacity of Public Utilities

The project will be served by the Portland Water District, City Department of Public Works, and underground/ power /cable/communications. The Applicant will need to contact the Portland Water District and the City Department of Public Services requesting ability to serve water and sewer demand. Confirmation of ability to serve water and sewer from PWD and DPS should be forwarded to the Planning Authority upon receipt.

4. *Site Design Standards*

a. Snow and Ice Loading

In accordance with the City of Portland Technical Manual, the Applicant is required to provide appropriate snow storage or description of a snow management plan. The snow storage locations shall be sited outside of existing and proposed drainage courses. The applicant will need to show how snow removal is being handled on site. If the applicant will be storing snow on site, the plans will need to show the proposed on-site snow storage areas and provide additional information on snow management.

b. View Corridors

This site is not within a Protected View Corridor as per the "View Corridor Protection Plan" approved by the Portland City Council in 2001.

c. Historic Resources

The site is not in any historic district; therefore, the project is not subject to by Historic Preservation review.

d. Exterior Lighting

The applicant has not submitted a lighting and photometric plan. As a subdivision, street lighting may be required to provide lighting for the area by the entrance and parking spaces. This will be

reviewed when a lighting plan is submitted. All exterior site lighting including lighting of building entrances will be cutoff with no light emitted above the horizontal plane or spilled onto adjacent properties or streets. Illumination levels will be adequate but not excessive for the safety, comfort and convenience of occupants and user of the site and will conform to all applicable standards of Section 12 of the Technical Manual.

e. Noise and Vibration

All heating, ventilation and air conditioning equipment (HVAC), air handling units (AHU), emergency generators, and similar equipment will have to be shown on the plans and meet state and federal emissions requirements. These mechanical equipment should be located to the interior of the site, away from abutting residential properties and be screened from view from any public street and from adjacent sites by structure walls, evergreen landscaping, fencing, masonry wall or a combination thereof. This information will have to be submitted for review.

f. Signage and Wayfinding

This standard does not apply to the proposal.

g. Zoning Related Design Standards

A design review according to the B-*7 Mixed Use Urban District Zone Design Principles & Standards* (Appendix 4 of the Design Manual) Standards was performed for the proposed new construction of a multi-family dwelling at 178 Kennebec Street. The applicant may either revise the design according to the review comments and resubmit or appeal the decision of the design review to the Planning Board. Below are some excerpts of the review, refer to Attachment 5 for the complete review:

Principle C: Parking, Loading and Service Areas

C-6: Surface Lots – Areas devoted to surface parking shall be screened from public rights-of-way and significant views through the use of design elements such as plantings, fencing, grade changes, and/or walls. A landscaped border shall be created around all surface parking lots. Any parking lot containing ten (10) or more parking spaces shall include one (1) or more landscaped island within the interior of the lot. There shall be at least one (1) island for every twenty (20) spaces.

- Some landscape/trees are provided between surface parking and Parris and Brattle Street. *Unclear how much screening is accomplished but space is limited.*
- *No screening is provided between the parking and the neighboring residential uses.*
- *No landscape island is proposed as required by this standard.*

C-8: Service, Utility and Mechanical Infrastructure

- Utilities, trash room, etc. are located on back side of building facing the surface parking.
- *Provide information about rooftop mechanicals and how they will be screened from view, especially from long views.*

Principle E: Architectural Design

E-2: Height – Building heights meet the zone and overlay map. The massing is not varied to transition to the residential scale but there is limited area to use that kind of transition. Instead, there is a buffer between the new building and the adjacent residential properties. *More information is needed to understand how the materials, articulation elements, and fenestration are used to meet this standard.*

E-3: Massing – No large expanses of undifferentiated facades on public rights-of-way. Project meets the requirement for a base, middle, and top. *However, staff felt the material placement should follow the rationale of the uses and massing variation – for example, break in building at short ends is a logical place to break material and staff support the warm tone and grey tone choices to balance each other. But staff felt it unnecessary to break the material and fenestration type/pattern mid-face of the long facades – these long facades should stay consistent in the material, fenestration, and details. The bays and use of base, middle, and top*

sufficiently create the massing variation and visual interest without this added change in material (see attached for clarification Attachment 5). Top floor windows feel out of proportion with the roof line – shorter and consistent windows would better accentuate the angled roof. There is a section of the Kennebec Street façade that includes the industrial-type windows and double-story base treatment, but that section of the building is residential in use – staff suggest revising the base treatment to only apply where there are commercial/community uses and consistently apply the residential materials and fenestration patterns where the residential uses exist inside.

E-9: Back Sides of Buildings – Upper floors meet the standard. *Staff felt the design and visual interest of the back side of the building could be improved at the ground level given how visible this façade is from the street and neighboring residential properties.*

E-10: Rooftop Appurtenances – *Provide information regarding the location and screening of HVAC and rooftop mechanicals.*

E-11: Fences and Walls – n/a

E-12: Materials – *Materials are not indicated on the elevations.* The standard currently *does not allow for fiber cement panels to be used on facades visible from the public rights-of-way.* Staff found the grey and warm tone materials to be a good combination and support the approach of two different materials if placed with a clear relationship and rationale to the use and massing breaks. *Staff review found that some revisions to the material placement may better reflect the massing, use, and orientation of the building (see attached sketch notes, Attachment 5).*

E-13: Transparency – *VT of .7 or greater is required by the standard.*

E-14: Illumination – *Building lighting information was not provided.*

E-16: Signage – *Each building may have one sign per storefront tenant at the pedestrian level, one sign board at each entrance with a tenant roster, and a street number sign at entrances as necessary.*

- *A sign master plan is required as part of the submittal.* Future signage will require a sign permit and review under the B7 Design Standards.

E-18: Sustainable Design – *Property that is controlled or conveyed by the City shall be developed at a minimum in a manner that is certifiable within the standards for building and neighborhood design in accordance with the U.S. Green Building Council's Leadership in Energy and Environmental Design (LEED).*

- *The property was sold to the applicant by the City of Portland. No information is provided on how the proposal meets this requirement.*

XI. NEXT STEPS

1. Address staff comments;
2. Address additional comments of the Planning Board;
3. Prepare final plan submission, including subdivision and site plan submittal requirements as included in 14-496(a) and (b) and 14-527(f) and (g) for review by the Planning Authority and Planning Board; and
4. Hold final Planning Board Hearing.

XII. ATTACHMENTS

PLANNING BOARD REPORT ATTACHMENTS

1. Traffic Engineer review (memo from Thomas Errico)
2. Civil Engineer and Department of Public Services review (memo from Lauren Swett)
3. Transportation Division review (memo from Bruce Hyman)
4. Fire Prevention Department review (memo from Robert Thompson)
5. Design review (memo from Caitlin Cameron)
6. Public Comment - PC 1_Michniewicz

APPLICANT'S SUBMITTALS

A. 178 Kennebec Street - Level III Application-signed
B. 178 Kennebec Street - Checklist- Level 3

C. Development Description
D. Evidence of Right, Title, and Interest
E. State and Federal Permits
F. Land Ordinance Review
G. Easements or Other Burdens
H. Technical and Financial Capacity
I. Construction Management Plan
J. Natural Features
K. Stormwater Management
L. Consistency with City Master Plans
M. Utilities
N. Solid Waste
O. Fire Safety
P. Conformity with Applicable Design Standards
Q. Verification of Proposed HVAC Equipment

PLANS

Plan 1. Survey
Plan 2. Cover Sheet & Legend
Plan 3. General Notes
Plan 4. Construction Management Plan
Plan 5. Site Plan
Plan 6. Utility Plan
Plan 7. Site Details
Plan 8. Utility and Drainage Details
Plan 9. Erosion Control Details & Notes
Plan 10. Kennebec Street - A1.01 - First Floor Plan
Plan 11. Kennebec Street - A1-02 - Second & Typical Floor Plans
Plan 12. Kennebec Street Rendering 2
Plan 13. Kennebec Street Rendering 3
Plan 14. Kennebec Street Rendering

Portland Maine Yes. Google's good here.

Shukria Wiar <shukriaw@portlandmaine.gov>

178 Kennebec Street - Preliminary Traffic Comments

Tom Errico <thomas.errico@tylin.com> Fri, May 4, 2018 at 9:05 AM
To: "Shukria Wiar (shukriaw@portlandmaine.gov)" <shukriaw@portlandmaine.gov>
Cc: "kgray@portlandmaine.gov" <kgray@portlandmaine.gov>, "Hyman, Bruce" <bhyman@portlandmaine.gov>, Jeremiah Bartlett <JBartlett@portlandmaine.gov>, "Jeff Tarling (JST@portlandmaine.gov)" <JST@portlandmaine.gov>

Hi Shukria – the following presents my preliminary traffic comments based upon a review of the application materials.

- The Kennebec Street curb design does not appear to be consistent with the City's Kennebec Street Improvement Project. The plans shall be revised to reflect to proposed design.
- It is my assumption that Bruce Hyman will be providing detailed comments on sidewalk facilities. I would note that the current plan does not depict a ramp at the Parris Street corner and the Brattle Street ramp is not acceptable as depicted. Revisions to match the City project will address these issues.
- Parking spaces meet City dimensional standards. The aisle width does not comply with City standards and thus the applicant shall request a formal waiver with supporting documentation.
- It is suggested that short-term 15-minute parking be provided on Parris Street between Kennebec Street and the proposed driveway.
- The driveway for 53 Brattle Street is being eliminated. It is unclear how parking for this lot is being addressed.
- A utility pole is being relocated to directly in front of 53 Brattle Street. Details on pedestrian accessibility for the relocated pole should be documented.
- The applicant shall provide information/data that supports the parking demand estimate provided in the application.
- The applicant has conducted a trip generation estimate for the project and back-up calculations for all project uses shall be provided. The project will not generate traffic levels that will require a Traffic Movement Permit.
- The proposed driveway on Parris Street does not comply with City standards for driveway separation. The applicant shall request a formal waiver with supporting documentation.

If you have any questions, please contact me.

Best regards,

Thomas A. Errico, PE
Senior Associate
Traffic Engineering Director
TY·LIN INTERNATIONAL
12 Northbrook Drive
Falmouth, ME 04105
+1.207.781.4721 main
+1.207.347.4354 direct
+1.207.400.0719 mobile
+1.207.781.4753 fax
thomas.errico@tylin.com
Visit us online at www.tylin.com

Twitter | Facebook | LinkedIn | Google+

"One Vision, One Company"

PLAN CORRECTIONS REPORT PL-000029-2018
FOR CITY OF PORTLAND

PLAN ADDRESS: 178 Kennebec
Portland, ME 04101

PARCEL: 034 F001001

APPLICATION DATE: 03/27/2018
EXPIRATION DATE:

SQUARE FEET: 0.00
VALUATION: $0.00

DESCRIPTION: Development of a 46-unit 55+ affordable housing apartment building with first floor retail/artist space in a 7-story building in the Bayside neighborhood

CONTACTS	Name	Company	Address
Agent/Representative	Michael Tadema-Wielandt, PE	Terradyn Consultants, LLC.	565 Congress Street, Suite 310 Portland, ME 04101
Applicant	Amy Cullen	Maine Workforce Housing, LLC	

Corrections Required

Civil Engineering - Third Party Reviewer Lauren Swett

v.1.00 - Not Resolved

Correction: General

Additional coordination with the City of Portland is required for sewer and stormdrain connections. The City is proposing a project on Kennebec Street, and connections in Kennebec will require coordination with the City's project, which is anticipated to occur next year. The City has also identified that the stormdrain shown on Parris Street is incorrectly labeled, and that the pipe is actually the Lancaster Street sewer. Stormdrain connections will not be allowed into this line. Stormdrainage may be directed to Kennebec where a stormdrain will be installed next year. It is also noted that the Applicant is proposing three separate stormwater services from their site. While this is allowed, the Applicant may wish to consolidate to reduce the future maintenance requirements.

Corrective Action: Provide appropriate reference on the plans to the City's project and verify that the proposed work will not be in conflict. The plans should be updated such that project stormwater is not tied into the Lancaster Street sewer.

Correction: Stormwater Management

Locations of sediment barrier should be provided as necessary. Existing grades to the south of the site are not provided, and it is unclear if sediment barrier may be needed along the project boundary.

Corrective Action: Provide updated erosion and sedimentation control plan.

Correction: General

The following detail updates are required. Provide Pavement Cross Section for pavement repair in right of way. Update the Sidewalk Ramp Detectible Warning Panel to be cast iron plates set in wet concrete - note recent standard change in Technical Manual.

Corrective Action: Provide updated details.

Correction: General

In accordance with the City of Portland Technical Manual, the Applicant is required to provide appropriate snow storage or description of a snow management plan. The snow storage locations shall be sited outside of existing and proposed drainage courses.

Corrective Action: Provide additional information on snow management.

Correction: General

Verification of utility ability to serve is required.

Corrective Action: Provide final letters from utilities when available.

Correction: General

The project is located in a concrete sidewalk district.

Corrective Action: Update plans to reflect concrete sidewalk.

Correction: Stormwater Management

There appears to be some misunderstanding of the General and Redevelopment Standard. For projects that do not meet the Chapter 500 thresholds requiring treatment, in the City of Portland, treatment is required if there is greater than 1,000 SF of new impervious surface (provide treatment per Ch 500, 95% of impervious treated) or 5,000 SF of redeveloped, non-roof impervious surface (50% of non-roof impervious redeveloped area). The Applicant is proposing treatment of portions of the roof and the parking area, which may be adequate to meet the standard, however, additional clarification is required.

Corrective Action: Provide a figure that identifies redeveloped non-roof impervious surface. It would be helpful if this figure also shows the areas that are proposed to be treated. Confirm that half of the redeveloped area is being treated. If that area cannot be treated, provide justification (using pollutant rankings) for treatment of other areas (i.e. roof) as an alternative.

Correction: Stormwater Management

The Stormwater Management Plan should include a stormwater inspection and maintenance plan and a stormwater agreement developed in accordance with and in reference to MaineDEP Chapter 500 guidelines and Chapter 32 of the City of Portland Code of Ordinances.

Corrective Action: Provide stormwater inspection and maintenance plan and proposed agreement.

Correction: General

In accordance with the City of Portland Technical Manual, the Applicant is required to submit a Photometric Plan demonstrating minimal lighting trespass.

Corrective Action: Provide photometrics plan.

Correction: General

In Accordance with the City of Portland Technical Manual, the Applicant shall submit a boundary survey bearing the seal of a Professional Land Surveyor licensed to practice in the State of Maine.

Corrective Action: Provide stamped version of boundary survey.

Conditions Required

PLAN CORRECTIONS REPORT PL-000029-2018
FOR CITY OF PORTLAND

PLAN ADDRESS: 178 Kennebec
Portland, ME 04101

PARCEL: 034 F001001

APPLICATION DATE: 03/27/2018
EXPIRATION DATE:

SQUARE FEET: 0.00
VALUATION: $0.00

DESCRIPTION: Development of a 46-unit 55+ affordable housing apartment building with first floor retail/artist space in a 7-story building in the Bayside neighborhood

CONTACTS	Name	Company	Address
Agent/Representative	Michael Tadema-Wielandt, PE	Terradyn Consultants, LLC.	565 Congress Street, Suite 310 Portland, ME 04101
Applicant	Amy Cullen	Maine Workforce Housing, LLC	

Corrections Required

Transportation/Planning

Bruce Hyman

C-3.0 Site Plan

- The sidewalks within the public ROW are to be Concrete (not Brick) per the Sidewalk Material Policy (http://www.portlandmaine.gov/DocumentCenter/View/4990/Sidewalk-Material-Policy-and-Maps)
- The curb ramp at the corner of Brattle-Kennebec crossing of Brattle does not have sufficient landing area at the top of the ramp - a minimum of 5' is needed with an obstruction at its top.
- There does not appear to be a curb ramp at the corner of Parris-Kennebec to cross Parris nor Kennebec Streets.
- Please provide a more direct route to the 'ADA Ramp' along the Parris St side - the current route is not for those accessing from the sidewalk. Can the 'Granite Step with Bollard' be eliminated or reconfigured to provide this more direct route?
- Please illustrate/explain what will be done to prevent vehicle encroachment onto the 5' wide walkway between the parking lot and building. A vertical curb is typically not sufficient.
- Please explain the flush curb driveway treatment for the driveway to the adjoining property on Parris Street.
- Additional street lighting may be needed along Parris and Brattle Streets.

C-6.0 Site Details

- Detectable warning panel: change to cast iron panel with all else the same
- Brick Sidewalk with Bit. Base: change detail to reflect sidewalks are to be Concrete in the public ROW per the sidewalk material policy (http://www.portlandmaine.gov/DocumentCenter/View/4990/Sidewalk-Material-Policy-and-Maps)
- Brick driveway apron cross-section: change detail to be Concrete driveway apron per sidewalk material policy; change detail to show max. of 2% cross-slope for minimum 5' for ADA-compliant pedestrian access route across driveway.
- I don't see a detail for the Street Lights to be installed on Kennebec Street.

L-1 Landscape Plan

- If all the bike racks shown are required to meet the bike parking requirements, please find a replacement for the 'wave rack' shown with one that provides 2 points of contact between the bike frame and bicycle (such as an inverted U-rack). I am not readily able to verify that 18 bike parking spaces are provided on the site (I count 10 spaces using Bike Hitches and an unknown # using the wave rack (see comment above)).
- I do not see a detail for the construction of the Raised Planting Beds shown on Kennebec Street. Their location, dimensions and configuration are to be coordinated with the City Arborist.

Conditions Required

PLAN CORRECTIONS REPORT PL-000029-2018
FOR CITY OF PORTLAND

PLAN ADDRESS: 178 Kennebec
Portland, ME 04101

PARCEL: 034 F001001

APPLICATION DATE: 03/27/2018
EXPIRATION DATE:

SQUARE FEET: 0.00
VALUATION: $0.00

DESCRIPTION: Development of a 46-unit 55+ affordable housing apartment building with first floor retail/artist space in a 7-story building in the Bayside neighborhood

CONTACTS	Name	Company	Address
Agent/Representative	Michael Tadema-Wielandt, PE	Terradyn Consultants, LLC.	565 Congress Street, Suite 310 Portland, ME 04101
Applicant	Amy Cullen	Maine Workforce Housing, LLC	

Corrections Required

Fire

Robert Thompson

1) A capacity to serve from the Portland Water District is required.
2) There is adequate access for fire apparatus.
3) The main entrance of the building must be the address for the property. This should be consistent with 911, tax assessor, Inspections Division and future mailing address.
4) Street addresses shall be marked on the structure and shall be as approved by the City E-911 Addressing Officer.

Conditions Required

Planning and Urban Development Department
Planning Division

Subject: B7 Design Review – 178 Kennebec Street

Written by: Caitlin Cameron, Urban Designer

Date of Review: Thursday, May 10, 2018

Tthe mixed-use/residential proposal at 178 Kennebec Street was reviewed by Caitlin Cameron, Urban Designer, Shukria Wiar, Planner, and Matt Grooms, Planner of the Department of Planning & Urban Development against the B-*7 Mixed Use Urban District Zone Design Principles & Standards* (Appendix 4 of the Design Manual).

Design Review Comments:

- Provide more information about materials and label on elevation drawings
- Provide photometrics plan and cut sheets for building lighting
- Provide a sign master plan

Purpose: The following purpose statements are most applicable to the proposed project.
1. Support and reinforce the goals of *A New Vision for Bayside*.
    - Government Center District – "The streets that were once dominated by vacant lots and public works yards are now lined with trees, small quiet buildings and corner parks."
    - Critical Action 2: Build more housing
2. Accentuate Bayside as a gateway to the city by highlighting major corridors and corners.
8. Allow building heights that create space for a critical mass of people needed to make a new urban neighborhood successful. Ensure that development is human in scale at the pedestrian level.
9. Encourage architecture which expresses the aesthetic of the time in which it was built, that respects local urban design patterns, and that is compatible with adjacent traditional residential neighborhoods.
11. Create a variety of mixed-use commercial opportunities that serve the neighborhood, city, and region.

Principle A: Urban Design
All development in Bayside shall be designed to create a strong urban identity and sense of place. . . .

A-1: Sense of Place – The project meets the standard by introducing new construction with clear, contemporary design that makes reference to the industrial character of the neighborhood. The surrounding buildings are predominantly one-story industrial buildings and transitioning into two-story residential buildings - this project provides an opportunity to introduce a new character for taller, mixed-use buildings in the neighborhood. Staff find the

project to be successful in its overall placement, mass, height, and character in achieving the intent of this standard.
A-2: Edges and Transitions – The project is quite a bit taller than the nearest residential buildings on Brattle Street which are mostly two-story buildings. The project places a buffer of surface parking between the new, six-story building and the existing, small-scale residential buildings. The building form and mass, however, are distinctly mid-rise and mixed use and does not attempt to relate to the single-family building types nearby.
A-3: Gateways – The current plan acknowledges the gateway nature of the site and meets the four-story height minimum with the building placement and orientation.
A-4: Views and Landmarks – Project does not block any identified view corridors.
A-5: Pedestrian Environment – The approach up Kennebec Street and the prominence and experience of the front face of the building should be carefully considered. The project uses large storefront windows and awnings to activate and articulate the pedestrian environment. The overhangs also provide a sense of enclosure at the pedestrian realm. Surface parking is mitigated by being placed behind the building.
A-6: Mix of Uses – The project is mixed use with a commercial and residential uses.
A-7: Building Orientation – The building appropriately orients to Kennebec Street creating an urban street wall at all three streets. There are not many buildings yet existing in the surrounding blocks – this project begins to establish the appropriate and desired street wall. The residential and retail entries all directly face streets – the commercial space has a corner entry on Kennebec and Brattle streets.

<u>Principle B: Access and Circulation</u>
Streets and sidewalks in Bayside shall be designed to encourage a pedestrian friendly, walkable environment. The goal is to create streets that are scaled and designed for pedestrian and bicycle use; are well landscaped; promote traffic calming; allow for mid-block permeability, and extend the pattern and scale of Portland's traditional street grid and blocks in accordance with the 1914 Atlas of the City of Portland.

B-1: Streets and Alleys – The streets surrounding this project are B streets. The sidewalks are narrow but are designed to include street lights, and ramps. Trees and landscaping are provided in the private space because the public right-of-way is too narrow to accommodate street trees or esplanades.
B-2: Street Connectivity – n/a
B-3: Mid-Block Permeability – The project includes mid-block permeability in the sense that the parking lot connects the two side streets parallel to Marginal Way.
B-4: Sidewalks and Crosswalks – Sidewalk comments will be given by other staff.
B-5: Green Streets – n/a
B-6: Multi-modality – The project provides amenity and access for all modes.
B-7: Continuity of Street Level Uses – n/a
B-8: Traffic-calming – No traffic calming measures are proposed in this case.
B-9: Streetscape Design – Kennebec Street is an A street while Parris and Brattle are B streets. The sidewalks are narrow but are designed to include street lights, and ramps. Trees and landscaping are provided in the furnishing zone on Kennebec and Brattle Street but on the private property side on Parris Street where the sidewalk is narrow.
B-10: Encroachments – Canopies overhang the public right-of-way and provide a sense of enclosure and scale for the pedestrian realm.
B-11: Lighting – B streets shall use the 19'3" size Bayside street light, black 3000K LED.

Principle C: Parking, Loading and Service Areas

Parking, loading and service areas shall be designed and located so as to present an attractive façade to neighboring use, to minimize their visual presence in the neighborhood, and to minimize the impact along pedestrian oriented streets and residential areas.

C-1: Parking Structures – n/a

C-2: Parking Entrances - n/a

C-3: Active Uses – n/a

C-4: Back of Parking Structures - n/a

C-5: Decks and Ramps – n/a

C-6: Surface Lots – *Areas devoted to surface parking shall be screened from public rights-of-way and significant views through the use of design elements such as plantings, fencing, grade changes, and/or walls. A landscaped border shall be created around all surface parking lots. Any parking lot containing ten (10) or more parking spaces shall include one (1) or more landscaped island within the interior of the lot. There shall be at least one (1) island for every twenty (20) spaces.*

- Some landscape/trees are provided between surface parking and Parris and Brattle Street. Unclear how much screening is accomplished but space is limited.
- No screening is provided between the parking and the neighboring residential uses.
- No landscape island is proposed as required by this standard.

C-7: Bike Racks. – Bike racks are located within proximity of the retail and residential entries directly accessible from sidewalks. Location and spacing must comply with the City of Portland Technical Manual.

C-8: Service, Utility and Mechanical Infrastructure

- Utilities, trash room, etc. are located on back side of building facing the surface parking.
- Provide information about rooftop mechanicals and how they will be screened from view, especially from long views.

Principle D: Open Space and the Public Realm – n/a

Principle E: Architectural Design

New development shall contribute positively to a new identity for the neighborhood as outlined in A New Vision for Bayside. New development shall create a mixed-use, pedestrian-friendly setting that contributes to the context of the surrounding urban fabric and provides a sensitive transition to adjacent residential neighborhoods. . . .

E-1: Architectural Design – Staff review find the overall design approach to be appropriate and effective. The design is clearly contemporary while making reference to the industrial character of the neighborhood. There is a good balance of fenestration and articulation with bays, trim, material patterns, articulated base, and canopies.

E-2: Height – Building heights meet the zone and overlay map. The massing is not varied to transition to the residential scale but there is limited area to use that kind of transition. Instead, there is a buffer between the new building and the adjacent residential properties. More information is needed to understand how the materials, articulation elements, and fenestration are used to meet this standard.

E-3: Massing – No large expanses of undifferentiated facades on public rights-of-way. Project meets the requirement for a base, middle, and top. However, staff felt the material placement should follow the rationale of the uses and massing variation – for example, break in building at short ends is a logical place to break material and staff support the warm tone and grey tone choices to balance each other. But staff felt it unnecessary to break the material and fenestration type/pattern mid-face of the long facades – these long facades should stay consistent in the material, fenestration, and details. The bays and use of base, middle, and top sufficiently create the massing variation and visual interest without this added change in material (see attached for clarification). Top floor windows feel out of proportion with the roof line – shorter and consistent windows would better accentuate the angled roof. There is a section of the Kennebec Street façade that includes the industrial-type windows and double-story base treatment, but that section of the building is residential in use – staff suggest revising the base treatment to only apply where there are commercial/community uses and consistently apply the residential materials and fenestration patterns where the residential uses exist inside.
E-4: Articulation – The use of the faux bays is a good way to add some visual interest and accentuate the tall corner of the building. The project also successfully introduces a combination of articulation elements that define the base, middle, and top of building, give dimension to the window openings, and add visual interest and comfort at the pedestrian level. These elements include awnings above the retail spaces, change in materials, "bays," trim and reveals at windows, and trim line/profile to delineate floors. Different window types are also used to differentiate uses.
E-5: Flexibility of Interior Layout – The ground floor commercial space is currently left undivided and flexible.
E-6: Entrances – Commercial office entrance is an existing front building entrance and retains the direct walkway from the street and a canopy. The new residential entrance is at the side of the building and will have a new glass vestibule. This entrance will be made more visible and accessible from the street by a walkway proposed to connect from both Preble and Elm Streets and signified with the use of granite posts.
E-7: Windows – Window placement meets these standards. See Standard E-3 above regarding fenestration pattern on façade composition. New or replaces windows should maintain a VT of .7 or greater.
E-8: Storefronts – The storefronts shown do not currently include doors on Kennebec but appear to meet the standard of allowing for frequent entries to be introduced. Storefront shall be transparent.
E-9: Back Sides of Buildings – Upper floors meet the standard. Staff felt the design and visual interest of the back side of the building could be improved at the ground level given how visible this façade is from the street and neighboring residential properties.
E-10: Rooftop Appurtenances – Provide information regarding the location and screening of HVAC and rooftop mechanicals.
E-11: Fences and Walls – n/a
E-12: Materials – Materials are not indicated on the elevations. The standard currently does not allow for fiber cement panels to be used on facades visible from the public rights-of-way. Staff found the grey and warm tone materials to be a good combination and support the approach of two different materials if placed with a clear relationship and rationale to the use and massing breaks. Staff review found that some revisions to the material placement may better reflect the massing, use, and orientation of the building (see attached sketch notes).
E-13: Transparency – VT of .7 or greater is required by the standard.
E-14: Illumination – Building lighting information was not provided.

E-15: Weather Protection – The project does include canopies at the retail frontage to meet this standard.
E-16: Signage – *Each building may have one sign per storefront tenant at the pedestrian level, one sign board at each entrance with a tenant roster, and a street number sign at entrances as necessary.*

- A sign master plan is required as part of the submittal. Future signage will require a sign permit and review under the B7 Design Standards.

E-17: Historic Buildings – The building is within 100' of the historic post office building, however, staff determined there is not enough visual or physical relationship between these buildings to warrant an advisory historic preservation review.
E-18: Sustainable Design – *Property that is controlled or conveyed by the City shall be developed at a minimum in a manner that is certifiable within the standards for building and neighborhood design in accordance with the U.S. Green Building Council's Leadership in Energy and Environmental Design (LEED).*

- The property was sold to the applicant by the City of Portland. No information is provided on how the proposal meets this requirement.

E-19: Shadows – The site is not adjacent to the trail or public open space. The project is north of the smaller-scale residential buildings and therefore minimizes the shadow impact.
E-20: Wind – No information on wind impact has been provided. Staff do not anticipate wind impacts being exacerbated by this project.

5/10/18 B7 Design Review

Caitlin Cameron

Shukria Wiar

Matt Grooms

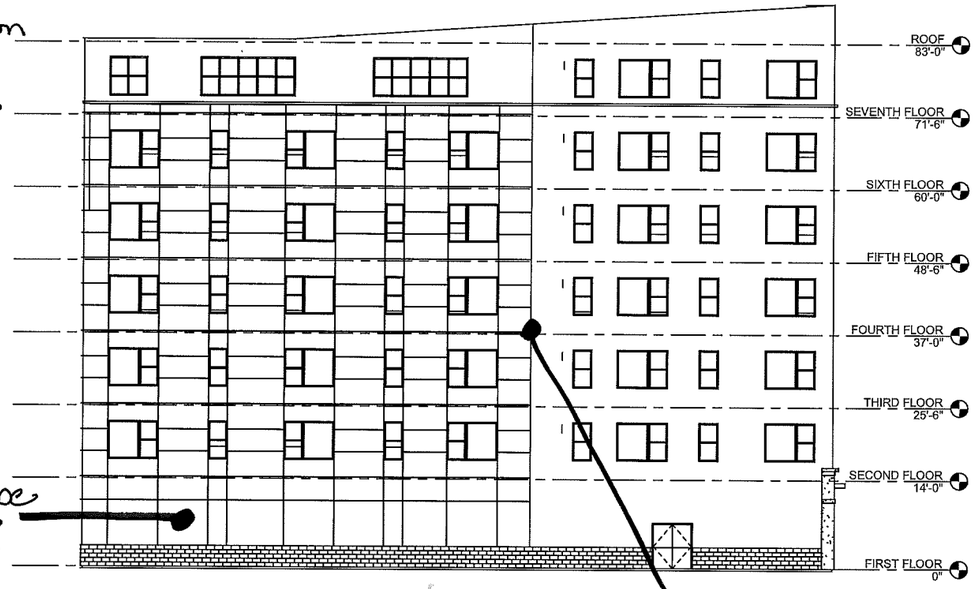

1 NORTH ELEVATION
3/32" = 1'-0"

Could more be done here?

Again, break is unnecessary
↳ consistent material + fenestration pattern

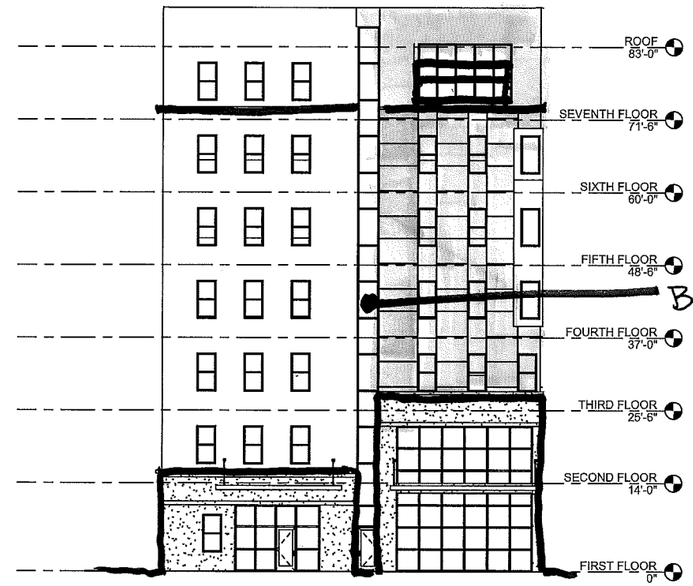

4 EAST ELEVATION
3/32" = 1'-0"

Break in materials makes sense here - continue this rationale across whole building for material breaks

Support approach to Base, middle, top with accentuated roof line + articulation

window height out of proportion - lower to 2, consistent height
⇒ accentuate roofline more

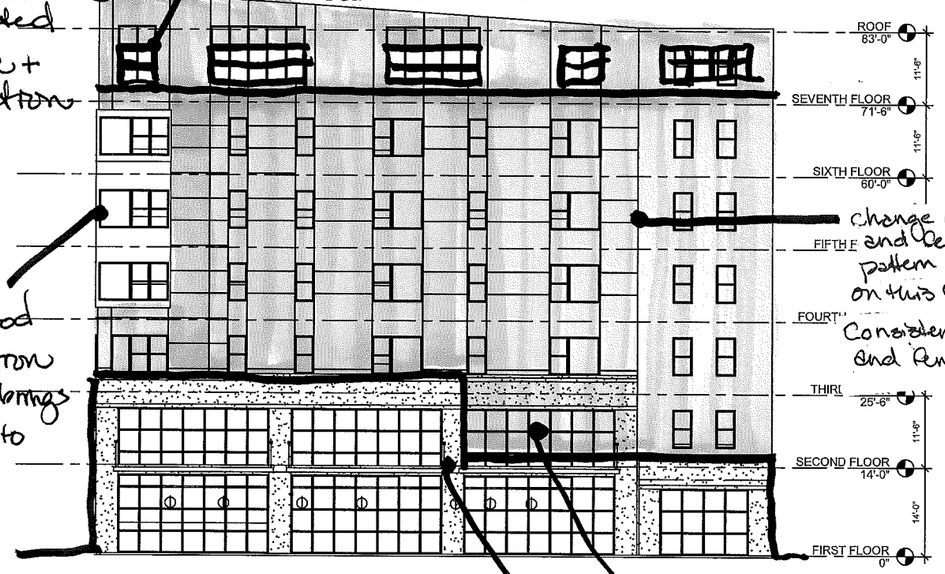

"Bays" are a good articulation feature, brings emphasis to corner

change in material and fenestration pattern unnecessary on this facade.

Consistent material and fenestration

Residential use here, should have resi windows

Double-height commercial base end here to reflect use inside

2 SOUTH ELEVATION
3/32" = 1'-0"

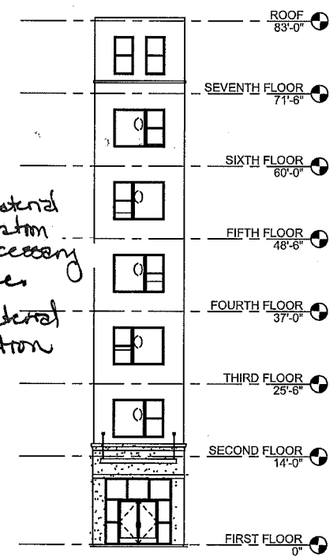

5 SOUTH WEST ELEVATION
3/32" = 1'-0"

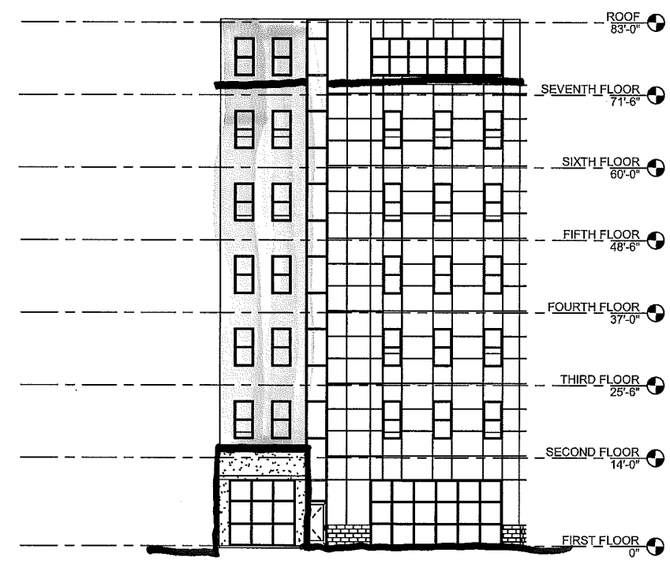

3 WEST ELEVATION
3/32" = 1'-0"

Prepared For: Owner
Address
City, State

Consultant:

Architect: ARCHETYPE architects
48 Union Wharf Portland, Maine 04101
(207) 772-6022 ARCHETYPE@ARCHETYPEPA.COM

Project: KENNEBEC STREET
PORTLAND, MAINE

Revisions:

Scale: 3/32" = 1'-0"

Date: JAN 12 2018

Building Elevations

A2.01

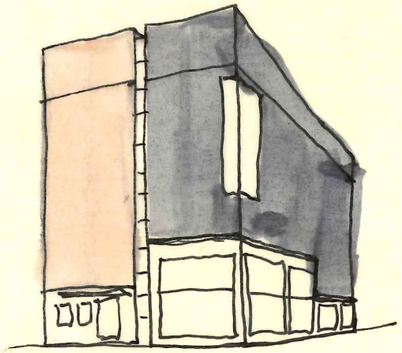

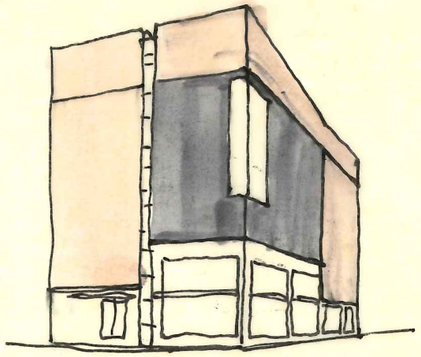

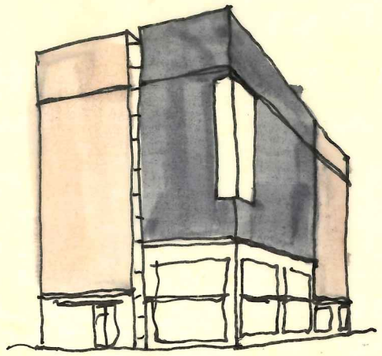

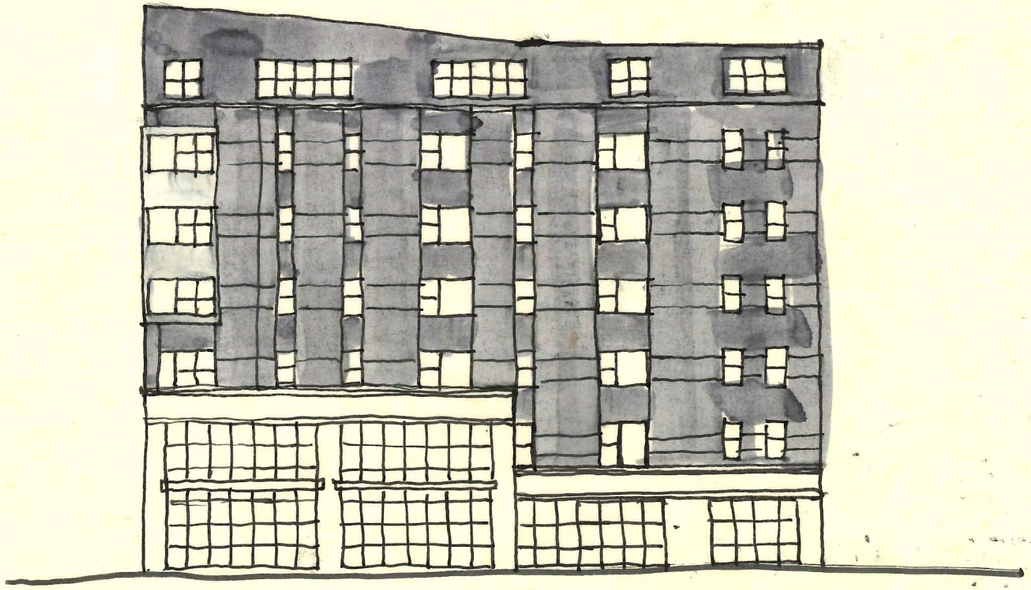

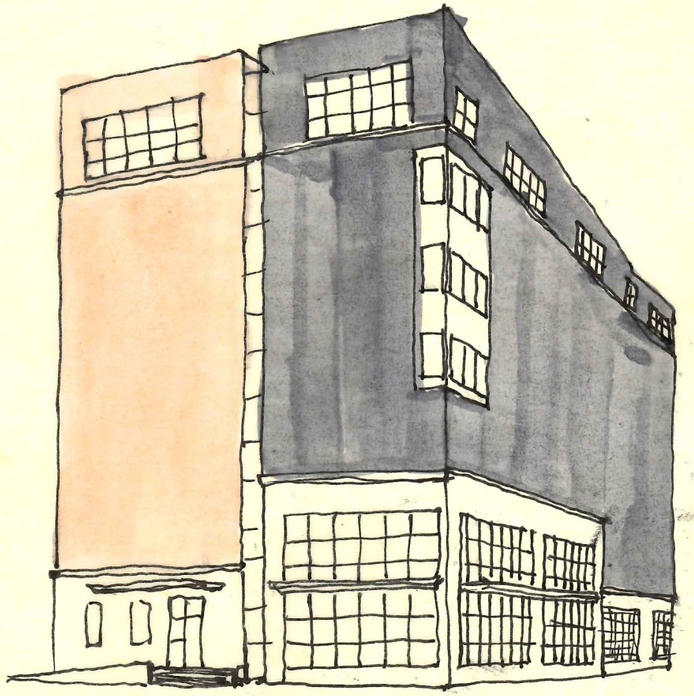

Portland Maine Yes. Google's good here.

Helen Donaldson <hcd@portlandmaine.gov>

Re: March 6 BNA Board Meeting

3 messages

Sarah Michniewicz <sarahmichniewicz@me.com> Tue, Mar 6, 2018 at 10:17 PM
To: Charles Kaufmann <clk328@rcn.com>
Cc: Helen Donaldson <hcd@portlandmaine.gov>

You can email the whole board at planningboard@portlandmaine.gov, and Nell Donaldson, a member of the planning staff with whom I have been discussing these issues, at hcd@portlandmaine.gov. I've been pretty explicit with all of them that Bayside has been through a lot and deserves development and buildings that aim much higher than the kind of stuff they are approving, but I'm just one voice. So thank you, it really does make a difference!

Sarah

On Mar 6, 2018, at 9:42 PM, Charles Kaufmann <clk328@rcn.com> wrote:

Hi, Sarah,

Just let me know how to do that.

Chip

On Mar 6, 2018, at 9:15 PM, Sarah Michniewicz <sarahmichniewicz@me.com> wrote:

Hi again, Chip!

At the meeting tonight it was clear that this building isn't what people really want to see. Most of this company's other projects have been brick, and are classic yet interesting. So why does Bayside get this? One of the answers given is that the planning board is "pushing for modern" in Bayside.

So-please submit your comments to the planning board! I'm not sure they realize how disliked this type of design is.

I hope your film went well!

Sarah

On Mar 5, 2018, at 11:40 PM, Sarah Michniewicz <sarahmichniewicz@me.com> wrote:

Thanks for your comments, Chip, and have a good trip!

On Mar 5, 2018, at 8:45 PM, Charles Kaufmann <clk328@rcn.com> wrote:

I will not be able to attend the March 6 meeting — I'll be in Oberlin, Ohio, showing one of my films. My reaction to the 178 Kennebec Street Project is: Yet another bland, look-alike, square condo building to add to Portland's ever-growing bland, look-alike, square, early-21st-century architectural legacy. Add to that: 1) Confused identity between office building and residential structure and 2) Does not reflect the inherent diverse aspirations of the human spirit.

Chip

On Mar 5, 2018, at 4:16 PM, Sarah Michniewicz <sarahmichniewicz@me.com> wrote:

Greetings All!

Just a reminder that the March BNA board meeting is tomorrow night, and we have some important items on the agenda!

-**Crime in Bayside**: After our usual updates from **Rob Parritt**, **Kelly Crotty** and **PSRC**, we will talk generally about neighborhood safety, the issues we face, and the increased activity that spring brings. **Jon Sahrbeck, a candidate for Cumberland County DA**, will be there to listen, so bring your voice to the conversation!

-**Crystal Canney**, a candidate for Senate District 27 will also be there.

-**Midtown Project Garage**: **Patrick Venne**, representative of The Federated Companies, will give an update and take questions on the parking garage proposed to be built on the Midtown site. Building permits were applied for in February: https://www.pressherald.com/2018/02/07/midtown-project-progresses-as-developer-files-permit/

-**178 Kennebec Street**: **Amy Cullen** of The Szanton Company will be giving a presentation and listening to our feedback on a proposed 7-story, 45-50 unit apartment building with ground level retail space. Please take a moment to check out the rendering below and bring your thoughts and questions.

-We will also be reviewing our **board attendance policy** and planning a **Spring Cleanup**.

See you soon!

Sarah

178 Kennebec Street Project:

<Kennebec Street Rendering 2.jpeg> <Screen Shot 2018-03-05 at 2.51.20 PM.png>

Helen Donaldson <hcd@portlandmaine.gov> Wed, Mar 7, 2018 at 11:27 AM
To: Caitlin Cameron <ccameron@portlandmaine.gov>

[Quoted text hidden]
--
Nell Donaldson
City of Portland Planning Division
874-8723
hcd@portlandmaine.gov

Helen Donaldson <hcd@portlandmaine.gov> Wed, Mar 7, 2018 at 11:31 AM
To: Sarah Michniewicz <sarahmichniewicz@me.com>
Cc: Charles Kaufmann <clk328@rcn.com>

Sarah,

Thanks for including me on this. This project has not come in for review yet, but I have forwarded this to Caitlin Cameron so that she is aware of these concerns, and will make sure that this is saved in a file for when the project application is submitted.

Best,
Nell
[Quoted text hidden]
--
Nell Donaldson
City of Portland Planning Division
874-8723
hcd@portlandmaine.gov

Level III – Preliminary and Final Site Plans
Development Review Application
Portland, Maine

Planning and Urban Development Department
Planning Division

Portland's Planning and Urban Development Department coordinates the development review process for site plan, subdivision and other applications under the City's Land Use Code. Attached is the application form for a Level III: Preliminary or Final Site Plan. Please note that Portland has delegated review from the State of Maine for reviews under the Site Location of Development Act, Chapter 500 Stormwater Permits, and Traffic Movement Permits.

Level III: Site Plan Development includes:

- New structures with a total floor area of 10,000 sq. ft. or more except in Industrial Zones.
- New structures with a total floor area of 20,000 sq. ft. or more in Industrial Zones.
- New temporary or permanent parking area(s) or paving of existing unpaved parking areas for more than 75 vehicles.
- Building addition(s) with a total floor area of 10,000 sq. ft. or more (cumulatively within a 3 year period) except in Industrial Zones.
- Building addition(s) with a total floor area of 20,000 sq. ft. or more in Industrial Zones.
- A change in the use of a total floor area of 20,000 sq. ft. or more in any existing building (cumulatively within a 3 year period).
- Multiple family development (3 or more dwelling units) or the addition of any additional dwelling unit if subject to subdivision review.
- Any new major or minor auto business in the B-2 or B-5 Zone, or the construction of any new major or minor auto business greater than 10,000 sq. ft. of building area in any other permitted zone.
- Correctional prerelease facilities.
- Park improvements: New structures greater than 10,000 sq. ft. and/or facilities encompassing 20,000 sq. ft. or more (excludes rehabilitation or replacement of existing facilities); new nighttime outdoor lighting of sports, athletic or recreation facilities not previously illuminated.
- Land disturbance of 3 acres or more (includes stripping, grading, grubbing, filling or excavation).

Portland's development review process and requirements are outlined in the Land Use Code (Chapter 14), Design Manual and Technical Manual.

Planning Division
Fourth Floor, City Hall
389 Congress Street
(207) 874-8719
planning@portlandmaine.gov

Office Hours
Monday thru Friday
8:00 a.m. – 4:30 p.m.

I. Project Information (Please enter n/a on those fields that are not applicable)

Project Name:	178 Kennebec Street
Proposed Development Address:	178 Kennebec Street
Project Description:	46-unit, 7-story, 55+ apartment building with ground floor artist studio/retail
Chart/Block/Lot:	Map 34, Block F, Lots 1 and 2
Preliminary Plan	X
Final Plan	

II. Contact Information (Please enter n/a on those fields that are not applicable)

APPLICANT

Name:	Amy Cullen
Business Name:	Maine Workforce Housing, LLC
Address:	482 Congress Street, Suite 203
City/State:	Portland, ME
Zip Code:	04101
Work #:	207-871-1661
Home #:	
Cell #:	207-272-6918
Fax #:	207-245-6442
E-mail:	acullen@szantoncompany.com

OWNER

Name:	The Szanton Company (affiliates of)
Address:	482 Congress Street, Suite 203
City/State:	Portland, ME
Zip Code:	04101
Work #:	
Home #:	
Cell #:	
Fax #:	
E-mail:	acullen@szantoncompany.com

AGENT/REPRESENTATIVE

Name:	Michael Tadema-Wielandt, P.E., Terradyn Consultants, LLC
Address:	565 Congress Street, Suite 310
City/State:	Portland, ME
Zip Code:	04101
Work #:	
Home #:	
Cell #:	207-632-9010
Fax #:	
E-mail:	mtw@terradynconsultants.com

BILLING (to whom invoices will be forwarded to)

Name:	Maine Workforce Housing, LLC
Address:	482 Congress Street, Suite 203
City/State:	Portland, ME
Zip Code:	04101
Work #:	207-245-6430
Home #:	
Cell #:	
Fax #:	
E-mail:	ttarbox@sacofallsmanagement.com

ENGINEER

Name:	Michael Tadema-Wielandt, P.E., Terradyn Consultants, LLC
Address:	565 Congress Street, Suite 310
City/State:	Portland, ME
Zip Code:	04101
Work #:	
Home #:	
Cell #:	207-632-9010
Fax #:	
E-mail:	mtw@terradynconsultants.com

SURVEYOR

Name:	Randy R Loubier, Owen Haskell, Inc.
Address:	390 U.S. Route One
City/State:	Falmouth, ME
Zip Code:	04105
Work #:	207-774-0424
Home #:	
Cell #:	
Fax #:	
E-mail:	rloubier@owenhaskell.com

ARCHITECT

Name:	David Lloyd, Archetype, P.A.
Address:	48 Union Wharf
City/State:	Portland, ME
Zip Code:	04101
Work #:	207-772-6022
Home #:	
Cell #:	
Fax #:	
E-mail:	lloyd@archetypepa.com

ATTORNEY

Name:	
Address:	
City/State:	
Zip Code:	
Work #:	
Home #:	
Cell #:	
Fax #:	
E-mail:	

DESIGNATED PERSON(S) FOR UPLOADING INTO e-PLAN

Name:	Michael Tadema-Wielandt, Terradyn Consultants
E-mail:	mtw@terradynconsultants.com
Name:	Adrienne Fine, Terradyn Consultants
E-mail:	adrienne@terradynconsultants.com
Name:	
E-mail:	

III. APPLICATION FEES

LEVEL III DEVELOPMENT (check applicable review)

☑	Less than 50,000 sq. ft.	$750.00
☐	50,000 – 100,000 sq. ft.	$1,000.00
☐	100,000 – 200,000 sq. ft.	$2,000.00
☐	200,000 – 300,000 sq. ft.	$3,000.00
☐	Over 300,000 sq. ft.	$5,000.00
☐	Parking lots over 100 spaces	$1,000.00
☐	After-the-fact Review	$1,000.00 + applicable application fee above

PLAN AMENDMENTS (check applicable review)

☐	Planning Staff Review	$250.00
☐	Planning Board Review	$500.00

OTHER REVIEWS (check applicable review)

☐	Traffic Movement	$1,500.00
☐	Stormwater Quality	$250.00
☑	Subdivision	$500.00 + applicable fee for lots/units below
	# of Subdivision Lots/Units [46] x $25.00 each	$ 1,150.00
☐	Site Location	$3,500.00 + applicable fee for lots/units below
	# of Site Location Lots/Units [ ] x $200.00 each	$
☐	Change of Use	
☐	Flood Plain	
☐	Shoreland	
☐	Design Review	
☐	Housing Replacement	
☐	Historic Preservation	
	TOTAL APPLICATION FEE DUE:	$ 2400.00

IV. FEES ASSESSED AND INVOICED SEPARATELY

- Notices to abutters (receipt of application, workshop and public hearing meetings) ($.75 each)
- Legal Ad in the Newspaper (% of total ad)
- Planning Review ($52.00 hour)
- Legal Review ($75.00 hour)
- Third Party Review (all outside reviews or analysis, eg. Traffic/Peer Engineer, are the responsibility of the applicant and will be assessed and billed separately)

V. PROJECT DATA (Please enter n/a on those fields that are not applicable)

TOTAL AREA OF SITE	16,553	sq. ft.
PROPOSED DISTURBED AREA OF THE SITE	16,553	sq. ft.
If the proposed disturbance is greater than one acre, then the applicant shall apply for a Maine Construction General Permit (MCGP) with DEP and a Stormwater Management Permit, Chapter 500, with the City of Portland.		
IMPERVIOUS SURFACE AREA		
Impervious Area (Total Existing)	14,842	sq. ft.
Impervious Area (Total Proposed)	14,757	sq. ft.
Building Ground Floor Area and Total Floor		
Building Footprint (Total Existing)	0	sq. ft.
Building Footprint (Total Proposed)	6667	sq. ft.
Building Floor Area (Total Existing)	0	sq. ft.
Building Floor Area (Total Proposed)	46,669	sq. ft.
ZONING		
Existing	B7	
Proposed, if applicable	B7	
LAND USE		
Existing	gravel parking lot	
Proposed	Residential and Commercial	
RESIDENTIAL, IF APPLICABLE		
# of Residential Units (Total Existing)	0	
# of Residential Units (Total Proposed)	46	
# of Lots (Total Proposed)	1	
# of Affordable Housing Units (Total Proposed)	28	
PROPOSED BEDROOM MIX		
# of Efficiency Units (Total Proposed)	1	
# of One-Bedroom Units (Total Proposed)	45	
# of Two-Bedroom Units (Total Proposed)	0	
# of Three-Bedroom Units (Total Proposed)	0	
PARKING SPACES		
# of Parking Spaces (Total Existing)	City owned lot	
# of Parking Spaces (Total Proposed)	19	
# of Handicapped Spaces (Total Proposed)	3	
BICYCLE PARKING SPACES		
# of Bicycle Spaces (Total Existing)	0	
# of Bicycle Spaces (Total Proposed)	18	
ESTIMATED COST OF THE PROJECT		

VI. APPLICANT SIGNATURE

By digitally signing the attached document(s), you are signifying your understanding this is a legal document and your electronic signature is considered a ***legal signature*** per Maine state law.

I hereby certify that I am the Owner of record of the named property, or that the owner of record authorizes the proposed work and that I have been authorized by the owner to make this application as his/her authorized agent. I agree to conform to all applicable laws of this jurisdiction. In addition, if a permit for work described in this application is issued, I certify that the Planning Authority and Code Enforcement's authorized representative shall have the authority to enter all areas covered by this permit at any reasonable hour to enforce the provisions of the codes applicable to this permit.

This application is for a Level III Site Plan review. It is not a permit to begin construction. An approved site plan, a Performance Guarantee, Inspection Fee, Building Permit, and associated fees will be required prior to construction. Other Federal, State or local permits may be required prior to construction, which are the responsibility of the applicant to obtain.

Signature of Applicant:	Amy Fuller
Date:	3/27/18

PRELIMINARY PLAN (Optional) - Level III Site Plan			
Applicant Checklist	Planner Checklist	# of Copies	**GENERAL WRITTEN SUBMISSIONS CHECKLIST**
X		1	Completed Application form
X		1	Application fees
X		1	Written description of project
X		1	Evidence of right, title and interest
X		1	Evidence of state and/or federal approvals, if applicable
X		1	Written assessment of proposed project's compliance with applicable zoning requirements
X		1	Summary of existing and/or proposed easement, covenants, public or private rights-of-way, or other burdens on the site
X		1	Written requests for waivers from site plan or technical standards, if applicable.
X		1	Evidence of financial and technical capacity
X		1	Traffic Analysis (may be preliminary, in nature, during the preliminary plan phase)
Applicant Checklist	Planner Checklist	# of Copies	**SITE PLAN SUBMISSIONS CHECKLIST**
X		1	Boundary Survey meeting the requirements of Section 13 of the City of Portland's Technical Manual
X		1	**Preliminary Site Plan including the following: (information provided may be preliminary in nature during preliminary plan phase)**
X		Proposed grading and contours;	
X		Existing structures with distances from property line;	
X		Proposed site layout and dimensions for all proposed structures (including piers, docks or wharves in Shoreland Zone), paved areas, and pedestrian and vehicle access ways;	
X		Preliminary design of proposed stormwater management system in accordance with Section 5 of the Technical Manual (note that Portland has a separate applicability section);	
X		Preliminary infrastructure improvements;	
X		Preliminary Landscape Plan in accordance with Section 4 of the Technical Manual;	
X		Location of significant natural features (including wetlands, ponds, watercourses, floodplains, significant wildlife habitats and fisheries or other important natural features) located on the site as defined in Section 14-526 (b) (1);	
X		Proposed buffers and preservation measures for significant natural features, as defined in Section 14-526 (b) (1);	
X		Location , dimensions and ownership of easements, public or private rights of way, both existing and proposed;	
X		Exterior building elevations.	

Portland, Maine | Yes. Life's good here.

Planning & Urban Development Department

LEVEL II and LEVEL III APPLICATION SUBMISSION CHECKLIST

Submit each Tab as one PDF file and bookmark the items as noted below

Please confirm by electronically checking the boxes to the left

Tab 1 – General Application Documents

Checklist	Items to be Provided
Yes NA Plan	PROJECT DESCRIPTION • Cover Letter with detailed project description
Yes NA Plan	COMPLETED CHECKLIST – LEVEL III APPLICATION
Yes NA Plan	RIGHT, TITLE AND INTEREST • Deeds, leases, or purchase and sales agreements
Yes NA Plan	EVIDENCE OF STATE OR FEDERAL APPROVALS, if applicable • Permits or letters of non-jurisdiction, if applicable
Yes NA Plan	ZONING ASSESSMENT • Table listing required and proposed uses and dimensional standards Zoning Assessment Table
Yes NA Plan	EXISTING &/OR PROPOSED EASEMENTS OR COVENANTS, if applicable • Evidence of existing easements and any proposed easements
Yes NA Plan	WAIVER REQUESTS • Written request for waiver describing request and reason. Waiver Table
Yes NA Plan	FINANCIAL CAPABILITY • Letter or evidence from a financial institution or third party verifying financial capacity to undertake project
Yes NA Plan	TECHNICAL CAPABILITY • Evidence of technical capability of applicant and consultants – resumes and/or examples of past projects

LEVEL II AND LEVEL III SITE PLAN STANDARDS AND SUBMISSION CHECKLIST

Provide assessment of compliance with standards and include supplemental documentation, as applicable.

Submit each Tab as one PDF file and bookmark the items as noted below

Tab 2 - TRANSPORTATION

Check list	Assess/Provide/Document:
Yes NA Plan	**Transportation Analysis- Traffic Impact (14-526 (a) 1)** • Provisions for pedestrian, bicycle, vehicle, and loading circulation and incremental volume of traffic impacts • Traffic Impact Study (Technical Manual, Section 1) if applicable
Yes NA Plan	**Access and Circulation (14-526 (a) 2 a)** • Access and internal circulation, addressing ADA access • Access and egress impacts on traffic flows • Description and use of drive-up features, if applicable
Yes NA Plan	**Loading and Servicing (14-526 (a) 2 b)** • Loading and servicing needs, route and travel way geometrics for deliveries • Turning templates for delivery vehicles, if applicable
Yes NA Plan	**Sidewalks (14-526 (a) 2 c)** • Sidewalks and condition along street frontages and internal walkways • Engineered details for ADA ramps and public sidewalk details meeting sidewalk materials policy and ADA ramp construction details as applicable (Technical Manual, Section 1)
Yes NA Plan	**Public Transit (14-526 (a) 3), if applicable** • Existing available transit services • Proposed site plan design details, such as easement, pad base, and shelter
Yes NA Plan	**Off-Street Parking: Vehicle & Motorcycle/Scooter) (14-526 (a) 4 a and c)** • Expected parking demand, proposed parking supply, ADA parking, and applicable Zoning Requirements • Address Technical Manual standards (Section 1) for curb cut separation and parking lot layout and locate on site plan
Yes NA Plan	**Bicycle Parking (14-526 (a) 4 b)** • Address bicycle parking requirements and identify locations on-site • Construction details for bike racks (Technical Manual, Section 1)
Yes NA Plan	**Snow Storage (14-526 (a) 4 d)** • Management plan for snow removal and locate snow storage areas on plan
Yes NA Plan	**Traffic Demand Management (TDM) (14-526 (a) 5), if applicable** • Develop TDM with Trip Reduction Targets and Strategies

Tab 3 - ENVIRONMENTAL AND LANDSCAPE FEATURES	
Check list	Assess/Provide/Document:
Yes NA Plan	**Preservation of Significant Natural Features (14-526 (b) 1), if applicable** • Trees, plants, habitats listed on State or Federal list of endangered or threatened • High and moderate value waterfowl and wading habitat • Aquifers on Casco Bay Islands • Waterbodies (including wetlands, watercourses, significant vernal pools and floodplains) • Proposed preservation areas and protection measures • Documentation from environmental consultants, determinations from applicable state agencies
Yes NA Plan	**Landscaping and Landscape Preservation (14-526 (b) 2 a)** • Preservation of trees and preservation within required zoning setbacks (Technical Manual, Section 4) • Protection measures of existing vegetation during construction • Protection measures within Shoreland Zone, if applicable
Yes NA Plan	**Site Landscaping (14-526 (b) 2 b)** • Screening and buffering of service areas and between non-residential and residential uses • Planting plans with plant schedule and sizes (Technical Manual, Section 4)
Yes NA Plan	**Parking Lot Landscaping (14-526 (b) 2 b ii), if applicable** • Landscaped islands within parking areas (Technical Manual, Section 4)
Yes NA Plan	**Street Trees (14-526 (b) 2 b iii)** • Existing Heritage or Feature Trees on site and measures to preserve • Identify street trees on the plan meeting the site plan and Technical Manual standards (Section 4) or identify alternative measures, if applicable

Tab 4 - ENVIRONMENTAL AND STORMWATER	
Check list	Assess/Provide/Document:
Yes NA Plan	**Water Quality, Stormwater Management and Erosion Control (14-526 (b) 3 a)** • Stormwater report in compliance with Section 5 of Technical Manual and DEP Chapter 500 stormwater for basic, general and flooding standards, as applicable • Erosion control plan and measures • Evidence of compliance with Urban Impaired Stream Standards pursuant to DEP Chapter 500 stormwater, as applicable • Subsurface sanitary sewage disposal and groundwater protection

Tab 5 - PUBLIC INFRASTRUCTURE AND SAFETY	
Check list	Assess/Provide/Document:
Yes NA Plan	**Consistency with City Master Plans (14-526 (c) 1)** • Identify consistency with master plans • Proposed easements, rights and improvements to connect or continue off-premises public infrastructure, as applicable
Yes NA Plan	**Public Safety and Fire Prevention (14-526 (c))** • Address Crime Prevention through Environmental Design (CPTED) (Technical Manual, Section 3) • Emergency vehicle access • Address consistency with public safety standards (Technical Manual, Section 3) • Submit a code summary referring NFPA 1 and all Fire Department standards (Technical Manual, Section 3) – Fire Checklist
Yes NA Plan	**Availability and Adequacy of Public Utilities (14-526 (c) 3) (Technical Manual, Sections 2 & 9)** • Electrical services, including providing underground services • Identify existing and proposed connections for public utilities and required public utility upgrades • Sewer line connections are required, if there is a main within 200 feet • Proposed solid waste management facilities on-site and management for the site • Written evidence of the ability to serve from utility companies, as applicable
Tab 6 - SITE DESIGN	
Check list	Assess/Provide/Document:
Yes NA Plan	**Massing, Ventilations and Wind Impact (14-526 (d) 1)** • Wind and ventilation impacts on adjoining structures and/or adjacent public spaces. Wind study, if applicable • Bulk, location or height impacts on adjoining structures • Identify and locate HVAC equipment and venting away from public spaces and residential properties • Identify screening and manufacturing specifications for noise, if applicable
Yes NA Plan	**Shadows (14-526 (d) 2), if applicable** • Shadow analysis of impacts on publicly accessible open space (Technical Manual, Section 11)
Yes NA Plan	**Snow and Ice Loading (14-526 (d) 3)** • Building design to prevent snow and ice from loading or falling onto adjacent properties or public ways
Yes NA Plan	**View Corridors (14-526 (d) 4), if applicable** • Protection of designated view corridors (Portland Design Manual, Appendix 1)

Yes	NA	Plan	
			Historic Resources (14-526 (d) 5), if applicable • Identify developments within Historic Districts or affecting Designated Landmarks • Certificate of Appropriateness or other evidence • Identify Developments within 100 feet of Historic Districts or affecting Designated Landmarks. Advisory HP review may be required • Address preservation and documentation of Archaeological Resources
Yes	NA	Plan	**Exterior Lighting (14-526 (d) 6)** • Cut sheets of on-site light fixtures and any architectural or specialty lights (Technical Manual, Section 12) • Engineered details for any lights proposed in street right-of-way (Technical Manual, Section 10)
Yes	NA	Plan	**Noise and Vibration (14-526 (d) 7)** • Evidence of noise levels for equipment, such as equipment specifications, to demonstrate consistency with zoning requirements
Yes	NA	Plan	**Signage and Wayfinding (14-526 (d) 8), if applicable** • Signage plan showing the location, dimensions, height and setback of all existing and proposed signs. Signs in Historic Districts are reviewed by Historic Preservation staff • Proposed commercial and directional signage on site
Yes	NA	Plan	**Zone Related Design Standards (14-526 (d) 5)** • Address Historic Preservation Design Review, if applicable • Address any applicable design review standards by zone • Address submission requirements from Design Manual, page 1, addressing neighborhood context • Description of exterior materials, color, finish, and samples

Tab 7 - Construction Management Plan

Check list			
Yes	NA	Plan	**Construction Management Plan** • Construction Management Document and Plan

Level II and Level III Site Plan Checklist

Please upload the following drawings with the listed details into e-Plan

☐ **RECENT BOUNDARY SURVEY** (stamped by Maine Licensed Surveyor)

Must be in compliance with Technical Manual, Section 13

SITE PLAN(s) (stamped by Maine Licensed Engineer) including:

☑ **Existing Conditions**

- Approximate location of structures on abutting property
- Topography
- Locate water courses
- Delineate wetlands
- Zone lines

☑ **Proposed Site Plan**

- Ground floor area, and grade elevations for all buildings

☑ **Access, Circulation, and Parking**

- Streets and intersections adjacent to site , any proposed geometric modifications
- Location, dimensions and materials of all existing and proposed driveways, vehicle, bicycle, & pedestrian access ways with corresponding curb lines
- Engineered specifications/ cross-sections for proposed driveways, sidewalks & paved areas
- Location and dimensions of proposed loading areas
- Existing and proposed transit infrastructure with dimensions/ engineering specifications
- Location of vehicle and bicycle parking with dimensions and engineering specifications

☑ **Site Considerations**

- Identify snow storage areas
- Location of fire hydrants
- Location of solid waste management facilities

☑ **UTILITY PLAN** including:

- Existing utilities on site and within public streets
- Location, sizing, and directional flows of all existing and proposed utilities
- Location and dimensions of off-premises public or publicly accessible infrastructure adjacent to site
- Electric utility infrastructure

☑ GRADING and DRAINAGE PLAN including:
• Existing grades and drainage • Proposed grades • Proposed stormwater management meeting Technical Manual (Section 5) standards • Location and proposed alteration of a water course • Preservation or alteration of wetlands
☑ EROSION CONTROL
• Must be in compliance with Technical Manual, Section 5
☑ LANDSCAPE PLAN including:
• Existing vegetation to be preserved and preservation measures • Proposed landscaping and buffers • Planting schedule
☐ RECORDING PLAT, if applicable
• IF SUBDIVISION: Must be in compliance with requirements of Section 14-496 (b)
☑ ARCHITECTURAL PLANS & RENDERINGS including:
• Exterior building elevations, color renderings, illustrations of all sides • Location and dimensions of all existing & proposed HVAC & mechanical equipment, all proposed screening • Provide context drawings, if applicable (Design Manual, page 1) • Floor plans

1 DEVELOPMENT DESCRIPTION

1.1 OVERVIEW

Maine Workforce Housing, LLC intends to construct a 7-story mixed use building including 46-apartments for 55+ residents on a 16,553 square foot parcel located at 178 Kennebec Street in Portland, Maine. The site is identified as Lots 1 and 2, Block F, on the City of Portland Assessors' Map 34. The site is located in the B7 Mixed Development District zone and is currently developed with a gravel parking area.

1.2 PROJECT PURPOSE AND NEED

The proposed project includes redevelopment of a previously developed lot in an area that has utility infrastructure in place and will provide residential units that are compatible with the existing neighborhood.

Parking for the development will be located on a surface parking lot south of the building that will be accessed from both Brattle and Parris Streets. Artist studio/retail space will be located on the ground floor. The ground floor also houses utilities and a lobby for the residential apartments. The residential apartments will be located on the 2nd through 7th floors.

1.3 EXISTING CONDITIONS

The existing site is located on the southern side of Kennebec Street between Brattle Street and Parris Street in Portland's Bayside neighborhood and is developed with a gravel parking area previously used by City vehicles. Nearly the entire site is covered with impervious surface. Underground utilities in Kennebec, Brattle and Parris Streets include water, gas, stormdrain and sewer. Overhead power and telecom services are on poles located on Kennebec, Brattle and Parris Streets.

Granite curb exists along the site's Kennebec Street frontage, and a short section of bituminous sidewalk exists along the northwestern portion of this frontage. Flush bituminous sidewalk with no curb exists along the site's Brattle Street frontage. There is no sidewalk along the site's Parris Street frontage. The existing gravel parking lot on site connects directly to both Brattle and Parris Streets. There is no on-street parking on Kennebec and Brattle Streets along the site's frontage, and there is limited on-street parking available on the western side of Parris Street. Cobra-head style street lights are located on utility poles surrounding the site on Kennebec, Brattle and Parris Streets.

Kennebec Street abuts the site to the north, Parris Street abuts the site to the east, residential, commercial, and parking lot uses abut the site to the south, and Brattle Street abuts the site to the west. The site is currently accessed from Brattle and Parris Streets. The street conditions in the vicinity of the Project Site are:

Street Name	Description	On-street Parking	Sidewalk	Notes
Kennebec Street	Approximately 35' wide paved way with two-way traffic in a 50' wide public ROW.	No.	Bituminous along NW frontage	Sidewalk does not continue along street frontage or along N side of Kennebec St
Brattle Street	Approximately 30' wide paved way with two-way traffic in a 30' wide public ROW.	No.	Flush bituminous	
Parris Street	Approximately 34' wide paved way with two-way traffic in a 50' wide public ROW.	Yes, west side only	Brick across Parris St on E side	

The existing site is relatively flat at elevation 11' and has less than 1' of elevation change across the parcel. It generally slopes from the center of the site in all directions towards the surrounding streets. Photographs of the existing site are provided in Attachment 1-A.

1.4 PROPOSED DEVELOPMENT

The development program includes the following components:

1.4.1 ON-SITE

A new seven-story building with a footprint of 6,667 square feet will be constructed on the site. The first floor will feature a lobby for the residential units, a utility room and trash room, and 5,429 sf of artist studio/retail space. The second through seventh floors will feature 46 one-bedroom apartments ranging from 600 sf to 670 sf. The residential units will be for 55+ housing, at least 28 of the units will be affordable housing, and at least 11 of the units will be ADA accessible. The total building floor area is 46,669 square feet. The proposed building is within the B7 zone. Elevation views and perspective renderings of the proposed building are provided in Attachment 1-B.

The residential lobby will be accessed from the Parris Street frontage, and the residential address is proposed to be 100 Parris Street. We are formally requesting that the residential lobby have an address of 100 Parris Street for mailing, fire, and emergency purposes. The first-floor retail and artists spaces will be accessed from the Kennebec Street frontage and the parking lot located south of the building. The first-floor spaces accessed from Kennebec Street will have the address 178 Kennebec Street. The surface parking lot will be accessed from Parris Street and Brattle Street. Bicycle parking will be provided on bike racks along the site's frontage on Kennebec, Brattle, and Parris Streets. The mail slots for the apartments will be located in the lobby. The trash room will be accessed from the lobby and from the parking lot for trash removal, and a mechanical room is located adjacent to the lobby on the first floor.

1.4.2 OFF-SITE IMPROVEMENTS

The applicant is proposing improvements to the sidewalks within the public ROW along the Kennebec, Parris and Brattle Street frontage. The Parris and Brattle Street frontages are currently undefined with no curb, so granite curb and brick sidewalks are proposed in line with existing sidewalks south of the site along these streets. Street trees, street lighting, and bike racks are also proposed within the City ROW along these proposed brick sidewalks.

1.5 TRAFFIC

The institute of traffic engineers trip generation manual estimates that the 46 residential units will generate approximately 24 vehicle trips during the PM peak hour and approximately 270 vehicle trips on a weekday. However, the proposed units are for 55+ housing and affordable housing. Many of the residents will not own vehicles, so this estimate is considered conservative. Additionally, the project will provide limited on-site parking and will likely attract residents who do not own vehicles. The project's proximity to places of work and entertainment will also encourage walking and alternative modes of transportation, and therefore the number of trips per day will likely be less than estimated. The relatively small amount of traffic that will be generated by the project is not expected to have a significant effect on the surrounding street network.

1.6 PARKING

The proposed project is an affordable housing projected located in the B7 zone with less than 50,000 sf of floor area, therefore the planning board shall establish the parking requirement for the structure. The proposed number of units is 46, and at least 28 of the units will be affordable housing. The artist space on the first floor is approximately 5,429 sf, which requires 6 parking spaces (1 space/1,000sf). The proposed parking lot is located south of the building and is accessed from Brattle and Parris Streets. The parking lot will include 19 parking spaces, 3 of which are ADA accessible and one of which is a dedicated drop off/pick up space. It is expected that many residents will utilize drop off/pick up services for transportation so including this space further reduces the requirement for parking spaces. This amount of parking is sufficient for the project because it is a 55+ affordable housing development where a small percentage of the residents are expected to own vehicles. At least 11 of the units will be ADA units, which will further decrease the number of residents who own vehicles. A ramp is proposed from the parking lot at the ADA spaces to the building lobby entrance. The required 18 bicycle parking spaces are provided throughout the site along the street frontage and near building entrances.

1.7 UTILITIES AND STORMWATER

The proposed project will include the installation of new utility services to the building. All new utility services will be provided from the existing utilities available within Kennebec, Brattle, and Parris Streets. The proposed locations of the new utility services are shown on the Utility Plan (Sheet C-5.0). More information on proposed utility services is provided in Section 11 of this application.

The proposed project results in a decrease in impervious area, however, more than 5,000 sf of existing impervious area will be redeveloped so the City's redevelopment standards apply. Treatment of stormwater runoff is required for 50% of the redeveloped impervious areas. Post-development stormwater runoff will closely follow existing runoff patterns. Runoff from the building roof will be collected in a roof drain system and 68% of the runoff will be directed to a storm basin cartridge system for treatment prior to being discharged to the existing storm drain system in Kennebec Street. The remaining roof runoff will be collected in a roof drain system that is directly discharged to the existing storm drain system in Kennebec Street. The proposed parking lot runoff will flow overland to Parris and Brattle Streets as it does today. Approximately 2,200 sf of the parking lot will be constructed out of pervious pavers, which will provide treatment for runoff from 2,860 sf of impervious parking and sidewalk areas. Stormwater from these areas will flow through the pervious pavers, through a filter gravel layer, and be collected in an underdrain system prior to discharging into the existing storm drain systems in Brattle and Parris Streets. More information on stormwater runoff from the site is provided in Section 9 of this application.

1.8 ATTACHMENTS

Attachment 1-A – Existing Site Photographs
Attachment 1-B – Building Elevation Views & Renderings

ATTACHMENT 1-A

Existing Site Photographs

PHOTO 1 – FROM KENNEBEC STREET, STANDING NORTH OF THE SITE, FACING NORTHEAST

PHOTO 2 –FROM KENNEBEC STREET, STANDING NORTH OF THE SITE, FACING SOUTH

Photos taken on 3/21/2018 by Adrienne Fine of Terradyn Consultants, LLC

PHOTO 3 –FROM BRATTLE STREET, STANDING WEST OF THE SITE, FACING EAST

PHOTO 4 –FROM KENNEBEC STREET, STANDING EAST OF THE SITE, FACING SOUTHWEST

Photos taken on 3/21/2018 by Adrienne Fine of Terradyn Consultants, LLC

ATTACHMENT 1-B

Building Elevation Views & Perspective Renderings

1 NORTH ELEVATION
3/32" = 1'-0"

4 EAST ELEVATION
3/32" = 1'-0"

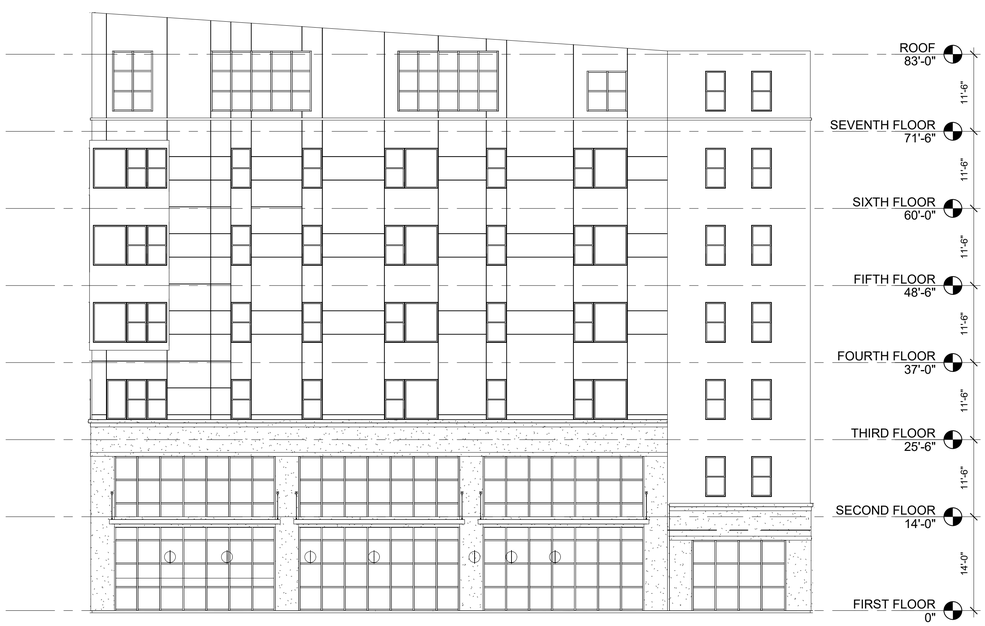

2 SOUTH ELEVATION
3/32" = 1'-0"

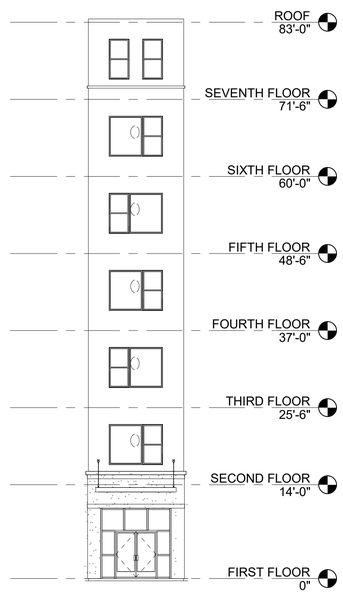

5 SOUTH WEST ELEVATION
3/32" = 1'-0"

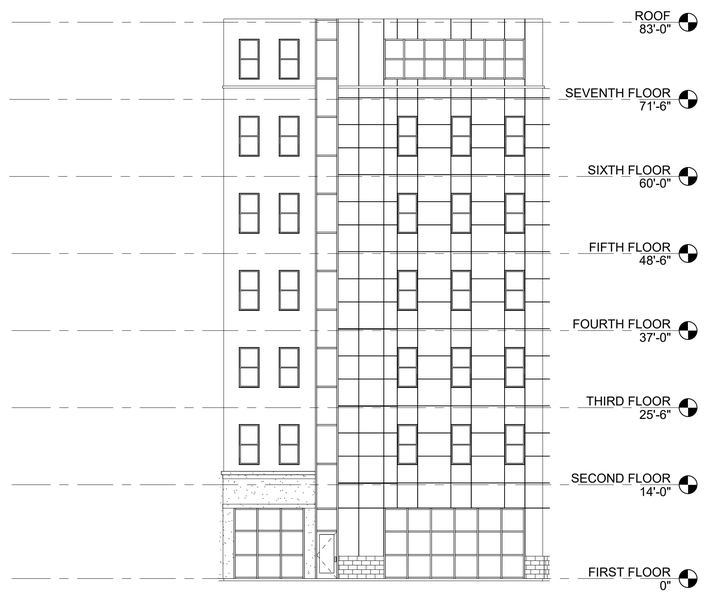

3 WEST ELEVATION
3/32" = 1'-0"

Prepared For:
Owner
Address
City, State

Consultant:

Architect:
ARCHETYPE
architects
48 Union Wharf Portland, Maine 04101
(207) 772-6022 ARCHETYPE@ARCHETYPEPA.COM

Project:
KENNEBEC STREET
PORTLAND, MAINE

Revisions:

Scale: 3/32" = 1'-0"

Date: JAN 12 2018

Building Elevations

A2.01

LEANER

INTERME

2 Right, Title and Interest

2.1 OVERVIEW

The applicant is Maine Workforce Housing, LLC. The project site is comprised of the following parcels and record owners:

Map/Block/Lot	CCRD Book/Page	Record Owner
34/F/ Lot 1	16707/206	City of Portland
34/F/ Lot 2	31408/102	Ross Furman
34/F/ Lot 5	18985/128	New Systems Realty, LLC (Ross Furman)

Ross Furman has a Purchase and Sale agreement with the City for Lot 1. The deeds and P&S are attached in attachment 2-A.

Maine Workforce Housing, LLC has a Joint Development Agreement with Ross Furman that gives them site control and formalizes their partnership. Maine Workforce Housing, LLC is developing the site and building and will retain ownership of the residential units. Ross Furman is working with Maine Workforce Housing, LLC and will own the first-floor artist studio/retail space. An executed copy of the Joint Development Agreement will be provided as soon as it becomes available.

2.2 ATTACHMENTS

Attachment 2-A – Property Deed and Purchase and Sale Agreement

ATTACHMENT 2-A

Title, Right, or Interest Documentation

RELEASE DEED

PORTLAND TERMINAL COMPANY, a corporation duly organized and existing under the laws of the State of Maine, with offices at Iron Horse Park, North Billerica, Middlesex County, Massachusetts (the "PTC"), for one dollar ($1.00) and other consideration paid to it by the **STATE OF MAINE**, acting by and through its Department of Transportation, whose mailing address is State House Station #16, Augusta, Maine 04333 (the "State"), hereby grants to the State, without any warranties or covenants of title whatsoever, those certain parcels of land and interests therein, including all franchises, riparian rights, rights of entry and rights of reversion appurtenant thereto, if any, together with all buildings, bridges, bridge abutments, structures, walls, culverts, crossings thereon, if any, situated in the City of Portland, in the State of Maine (collectively, the "Premises") described as follows:

SEE **"EXHIBIT A"** AND **"EXHIBIT B"** ATTACHED HERETO
AND MADE A PART HEREOF BY REFERENCE

ALSO CONVEYING TO THE STATE OF MAINE, its successors and assigns, a permanent easement over and across the remaining land of PTC sufficient to effectuate rail ingress to and rail egress from the Premises described in said **Exhibit A** and shown on **Exhibit B** from and to the PTC's Main Line (Union Station to Portland-Falmouth Line) at a point between the northerly side of Congress Street at approximate Engineering Centerline Station 4+93.2 and a point approximately 570 feet northerly thereof at approximate Engineering Centerline Station 10+00.0. It is the intention of the parties hereto that this permanent easement is given for the purpose of providing an unhampered rail connection necessary for the sole purpose of operating trains of the National Railroad Passenger Corporation and its successors or operating passenger trains (only) of any entity other than the National Railroad Passenger Corporation and its successors between the Premises and the aforementioned Main Line owned and operated by PTC, its successors and assigns.

Together with the right to enter upon remaining land of PTC, subject to reasonable and customary terms and conditions established by PTC, its successors and assigns, for the purpose of construction, installation, repair and maintenance of trackage, track appurtenances, switches and bridge abutments to carry out the purposes of this Easement; provided, however, that with respect to the Main Line any construction, installation, repair and maintenance necessary to carry out the purposes of this Easement will be performed by PTC at the expense of the State. Said Easement shall be appurtenant to the above-conveyed premises as described on the attached **Exhibit A** and shown on **Exhibit B**.

THIS CONVEYANCE IS SUBJECT to the following reservations, conditions, covenants and agreements:

1. In addition to any conditions that may be imposed on the use of the Premises by the Maine Department of Environmental Protection, the State shall restrict the use of the Premises, or any portion thereof, to the following: commercial business uses, rail/industrial uses and/or passive recreational uses. Such uses shall not require the withdrawal of groundwater for drinking water or other uses. By this restriction the State covenants and agrees for itself, its successors and assigns, not to allow the Premises, or any portion thereof, to be used for any residential or active recreational use with the exception of paved recreational trails. Residential use includes, but is not limited to, single family dwellings, apartment houses, condominiums, hotels, motels, inns, boarding houses, multifamily dwellings and/or any use that involves a structure to be used primarily for human habitation for any extended period of time. Active Recreational use includes, but is not limited to, athletic fields, sports facilities, parks and/or any use which subjects the Premises to use by the general public for active recreational activities, except as provided herein. In addition, by this restriction the State covenants and agrees for itself, its successors and assigns, not to allow the Premises or any portion thereof to be used as a site for a hospital, nursing home, rehabilitation facility, daycare facility for persons of any age or educational facility (private or public).

In the event of any violation of the above restrictions, PTC, its successors and assigns, shall have the right to enforce the same and shall have available all remedies at law and in equity.

The provisions of this paragraph 1 are a covenant running with the land and shall be expressly included in any deed, lease or other instrument conveying or creating any interest in all or part of the Premises and shall be binding upon the State's successors and assigns therein. Notwithstanding the foregoing, the provisions of this paragraph may be extinguished by the express written consent of PTC which consent shall not be unreasonably withheld.

2. Except as otherwise provided in this Deed, and in the Terms and Conditions between the National Railroad Passenger Corporation ("Amtrak") and PTC (and PTC's affiliates) generally regarding passenger operations between Boston, Massachusetts, and Portland, Maine, this conveyance is made without granting any right of way or other rights, either by necessity or otherwise, over any remaining land or location of the PTC.

3. To the best knowledge of PTC, **Exhibit C** attached hereto and made a part hereof by reference is a complete list of all existing agreements between PTC and third parties regarding the construction, installation, operation, maintenance, modification, repair, replacement, relocation or removal of any telecommunications system related to the Premises. "Knowledge" as used in this Deed shall mean the knowledge of PTC's Vice President of Real Estate and each officer or employee who is principally responsible for property matters, after reasonable investigation. If at any time after the conveyance under this Deed, PTC discovers any other such communication agreements, PTC shall

promptly and at its own cost and expense, without any further consideration on the part of State, convey its rights and obligations under such agreements to State.

4. The PTC hereby reserves a permanent, non-exclusive easement in, over, under and through the Premises from the beginning of the "Union Branch" line at Survey Station 4+00.0 at the intersection of the southerly side of Park Avenue and the westerly side of Saint John Street, northerly to the southerly side of Forest Avenue, ten feet wide (the "Telecommunications Easement Property"), as identified in the agreements listed on the attached **Exhibit C** (the "Telecommunications Agreements"), only for the purpose of accessing, operating, maintaining, repairing, replacing and removing the fiber optics communications system described in the "Telecommunications Agreements," including existing poles, pipes, wires, fibers, fiber-optic cables, repeater stations, attachments, appurtenances, structures or other equipment and property of any description currently used to meet PTC's obligations under the Telecommunications Agreements (the "Telecommunications Easement"). The Telecommunications Easement Property boundary shall be 5 feet on both sides of the centerline of the existing fiber facilities, as shown on the as-built drawings attached hereto **Exhibit D.** PTC does further reserve a permanent limited right-of-way and right of access to the Telecommunications Easement Property over and across the Premises for the purposes of the use, enjoyment, maintenance, operation of the Telecommunications Easement to the extent necessary to comply with the Telecommunications Agreements.

The Telecommunications Easement is subject to the following additional terms and conditions:

(a) The PTC shall have no right to construct, install, modify (except to the extent required pursuant to the Telecommunications Agreements) or relocate any fiber optics communications system (including existing poles, pipes, wires, fibers, fiber-optic cables, repeater stations, attachments, appurtenances, structures or other equipment and property of any description) within the Premises.

(b) The PTC shall have no right to lease, license, mortgage, assign, pledge or otherwise alienate the Telecommunications Easement. Provided, however, that PTC shall have the right to renew the Telecommunications Agreements on substantially the same terms at the appropriate times, and shall also have the right to assign any or all of its rights to its parents, affiliates, subsidiaries and successors.

(c) The PTC shall obtain all required governmental approvals, if any, to exploit the rights reserved in the Telecommunications Easement. Prior to exercising any rights reserved pursuant to this Telecommunications Easement, PTC shall obtain at its sole expense, or cause its contractors to obtain, as applicable: (i) a policy or policies of worker's compensation insurance covering all persons exercising any rights reserved pursuant to this Telecommunications Easement, and (ii) general liability insurance naming the State as an additional insured with respect to the

exercise of such rights, and upon such terms and in such amounts as are reasonable and customary. Notwithstanding the foregoing, the PTC or its contractor shall have the right to fulfill these obligations by means of self-insurance; provided that, in the case of PTC, such self-insurance shall be the same as is applicable to all of PTC's operations.

(d) The PTC, at its sole cost and expense, shall operate, maintain, repair, replace, relocate and remove any structures, facilities and improvements hereunder so as not to injure or damage the State's transportation facilities and/or the property of the State or of any operator thereon, and so as not to interfere with any transportation operations thereon.

(e) The replacement or relocation of all structures, facilities and improvements shall be subject to the approval of the State, which approval shall not be withheld or delayed if (i) the request is in compliance with the terms and conditions of this Telecommunications Easement; and (ii) the methods and materials to be used by the PTC are in accordance with those generally accepted in the railroad industry. The State shall issue any determination pursuant to this Section within 20 days of receipt of any request for approval. In the event of a relocation of any structures, the State and PTC shall realign the easement and refile this Release Deed, at PTC's expense.

(f) The exercise of this Telecommunications Easement shall be at the sole risk of the PTC. The PTC hereby releases the State from any and all liability for costs, losses, damages, and/or harm to persons and/or to the property of the PTC arising out of or relating to the exercise of this Telecommunications Easement and PTC shall indemnify and hold the State harmless against any and all costs, losses, damages, and/or harm to any party arising out of or relating to the design, location, relocation, repair, maintenance, use, removal, or replacement of any structures, facilities, or improvements, including without limitation to the foregoing: (i) any attorney's fees incurred' (ii) any and all claims for damages, losses, or injuries resulting to the State's property, the property of PTC, or the property of others; and (iii) any and all claims for injuries or death to persons. This indemnification shall include, but shall not be limited to, any and all liability arising out of or relating to an agreement between the PTC and AT&T dated July 29, 1986 and any other fiber optics communications agreements, whether or not listed on **Exhibit C**. This indemnification shall apply without regard to whether the cost, loss, damage, harm, or other claim is incurred directly or indirectly by the State, by PTC or by third parties. This indemnification shall not apply to costs, losses, damages and/or harm that are caused solely by the negligent or intentional infliction of harm by the State, including its employees, contractors or agents. This indemnification shall exclude those ordinary and usual day-to-day administrative costs incurred by the State in reviewing requests for the approval of the location, repair and replacement of structures, facilities, or improvements pursuant to this Telecommunications Easement.

(g) The PTC at its sole cost and expense shall repair and restore the Premises subject to the Telecommunications Easement to at least the same condition as they were in prior to any work or disturbance in connection with the exercise of the rights reserved under this Telecommunications Easement.

(h) The PTC shall give the State twenty (20) days written notice before the commencement of any work on the Premises.

(i) The reservation of this Telecommunications Easement shall not affect the right of the State to use the Premises for transportation purposes, or to grant the use of the Premises to others for any purposes, including (without limitation) the transmission of telecommunications or intelligence, so long as such use(s) do not interfere with the exercise by the PTC of its rights under this Telecommunications Easement.

(j) The PTC shall be liable for the payment of any tax, assessment, or other government charge arising out of or relating to the existence or use of this Telecommunications Easement, including without limitation the existence or use of any equipment or appurtenances on the Premises. The PTC shall keep the Premises free of any mechanic's and materialmen's liens arising from the exercise of its rights under the Telecommunications Easement. The State hereby covenants with the PTC to recognize the Telecommunications Easement and, without the payment of any further consideration, to execute, acknowledge and deliver such instruments suitable for recording with the Registry of Deeds as the PTC may reasonably require to acknowledge title to the Telecommunications Easement in the PTC.

5. The several exceptions, reservations, conditions, covenants and agreements contained in this Deed shall be deemed to run with the land and be binding upon the PTC and the State forever. In addition to the acceptance and recording of this Deed, the State hereby signifies assent to the said several exceptions, reservations, conditions, covenants and agreements, by joining in its execution.

6. Except where otherwise specifically provided in this Deed, whenever used in this Deed or in any easement or right reserved under this Deed, the term "PTC" shall not only refer to the PORTLAND TERMINAL COMPANY, but also to its operating companies (including but not limited to the SPRINGFIELD TERMINAL RAILWAY COMPANY), successors, assigns and grantees; and the term "State" shall not only refer to the STATE OF MAINE acting by and through its Department of Transportation, but also to the State's successors, assigns and grantees.

TO HAVE AND TO HOLD the foregoing Premises, with all the privileges and appurtenances thereunto belonging, unto the State of Maine, its successors and assigns, forever.

IN WITNESS WHEREOF, the said Portland Terminal Company has caused this Deed to be executed in its name and its corporate seal to be hereto affixed by David A. Fink, its Chief Executive Officer, thereunto duly authorized this 4th day of September, 2001.

PORTLAND TERMINAL COMPANY

Witness

By David A. Fink
Its Chief Executive Officer

COMMONWEALTH OF MASSACHUSETTS
COUNTY OF MIDDLESEX
September 4, 2001

Personally appeared he above-named David A. Fink, Chief Executive Officer of the Portland Terminal Company and acknowledged the execution of the foregoing instrument to be his free act and deed in his said capacity and the free act and deed of the Portland Terminal Company.

Before me,

Notary Public
Print Name: JAMES J. STEINKRAUSS
My Commission Expires: Oct. 6, 2006
Seal:

IN WITNESS WHEREOF, the said State of Maine, acting by and through its Department of Transportation, has caused this instrument to be executed by John G. Melrose, its Commissioner, thereunto duly authorized, this 4th day of September, 2001.

STATE OF MAINE
DEPARTMENT OF TRANSPORTATION

Joni K Kennedy
Witness

By John G. Melrose
Its Commissioner

STATE OF MAINE
COUNTY OF KENNEBEC
September 4, 2001

Personally appeared before me the above-named John G. Melrose, Commissioner, State of Maine, Department of Transportation, and acknowledged the execution of the foregoing instrument to be his fee act and deed in his said capacity and the free act and deed of the State of Maine.

Before me,
Jean A Stewart
Notary Public
Print Name: Jean A. Stewart
My Commission Expires: August 15, 2006
Seal:

EXHIBIT "A"
Plan/description of premises

A certain strip or parcel of land ("Railroad Right-of-Way") of varying widths, with the improvements thereon, situated in the City of Portland, County of Cumberland and State of Maine and being the railroad line sometimes referred to as the "Union Branch", more particularly bounded and described as follows:

Beginning at approximate Engineering Centerline Station 4+00.0, which is at or near the southerly end of the trestle over the intersection of the southerly side of Park Avenue and the westerly side of St. John Street in said Portland, as shown on plan entitled "Right-of-Way and Track Map, Portland Terminal, Operated by Portland Terminal Company, Survey Station 0+00.0 to Station 52+80.0," Valuation Plan V1C, Sheet 1 thereof, thence continuing in a generally easterly and northerly direction to Engineering Centerline Station 134+80.9 as shown on plan entitled "Right-of-Way and Track Map, Portland Terminal, Operated by Portland Terminal Company, Station 105+60.0 to Station 134+80.9," Valuation Plan V1C, Sheet 3 thereof.

The following parcels comprising the "Union Branch" conveyed above are depicted on said Right-of-Way and Track Maps, Valuation Plan V1C, Sheets 1 through 3, copies of which are attached hereto as "Exhibit B" and made a part hereof. Said Right-of-Way and Track Maps are also on file at the Maine Department of Transportation, Child Street, Augusta, ME 04333:

Grantor: George P. Wescott
Grantee: Portland and Rochester Railroad
Instrument: Deed dated January 4,1881 Recorded: Book 481, Page 386
Map and parcel reference: Map VIC 1 Parcel 34

Grantor: William H. Conant
Grantee: Portland and Rochester Railroad
Instrument: Deed dated July 27,1881 Recorded: Book 481, Page 3I9
Map and parcel reference: Map VIC 1 Parcel 39

Grantor: William H. Conant
Grantee: Portland and Rochester Railroad
Instrument: Deed dated August 10, 1881 Recorded: Book 481, Page 382
Map and parcel reference: Map VIC I Parcel 36

Grantor: Joseph H. Ricker
Grantee: Portland and Rochester Railroad
Instrument: Deed dated August 15, 1881 Recorded: Book 489, Page 27
Map and parcel reference: Map VIC I Parcel 35

Parcel 6

PURCHASE AND SALE AGREEMENT

THIS PURCHASE AND SALE AGREEMENT IS made this 10th day of OCT, 2017 by and between the City OF PORTLAND, a body politic and corporate located in Cumberland County, Maine, (hereinafter referred to as "Seller" or "City"), and Ross Y. Furman, an individual having a mailing address of Box Two, Portland, ME 04112 (hereinafter referred to as "Buyer"").

RECITALS

WHEREAS, the CITY is the owner of approximately .22 acres of land at 178 Kennebec Street, Portland, Maine as generally depicted on the plan attached hereto as Exhibit A (the "Premises") and incorporated herein; and

WHEREAS, Buyer desires to purchase the Premises, and the City desires to convey the Premises to Buyer, subject to all easements of record and any other existing easements burdening the Premises;

NOW THEREFORE, in consideration of the foregoing and for other good and valuable consideration, the receipt and sufficiency of which is hereby acknowledged, the parties, intending to be legally bound, hereby agree as follows:

1. **SALE.** City agrees to sell the Premises to Buyer, and Buyer agrees to purchase the Premises in accordance with the terms and conditions set forth in this Agreement. This Agreement is for the sale of land only.

2. **CONSIDERATION**. The purchase price for the Premises shall be the lesser (the Purchase Price") of: Two Hundred and Fifty Thousand Dollars ($250,000.00) and the product of Twenty-Five Dollars ($25.00) times the number of square feet comprising the Premises as shown a pending and soon to be completed boundary survey of the Premises being done by or for the City (at its expense), subject to the following cost adjustments and conditions:

    a. Buyer shall deposit in the sum of Twenty-Five Thousand Dollars ($25,000.00) (the "Deposit") within 3 business days after the full execution of this Agreement that the parties agree will be held in escrow as of the date of this Agreement, in a non-interest bearing account with CBRE | The Boulos Company; the Deposit shall be refundable only in accordance with the terms of this Agreement, including without limitation, the provisions of sections 4(f), 6, 7 and 10; and

    b. The Buyer shall pay the remainder of the Purchase Price to the City by wire transfer (or as otherwise reasonably requested by the City) at closing.

3. TITLE AND DUE DILIGENCE.

a. Due Diligence Period. Buyer will have from the date of this Agreement until 4:00 PM Eastern Daylight Savings Time on the day that is forty-five (45) days after the date of this Agreement (the "Due Diligence Period") to complete any survey, environmental review and title examinations.

b. Property Description. The property description contained in the deed will be a survey description based upon a survey plan (the "Premises") that will more specifically describe the property shown on Exhibit A hereto. The survey will be distributed to the parties hereto prior to expiration of the Due Diligence Period and the parties will agree on the property description prior to closing.

c. Financing Contingency. Buyer shall have from the date of this Agreement until 4:00 PM Eastern Daylight Savings Time on the day that is forty-five (45) days after the date of this Agreement (the "Financing Period") to obtain commercially reasonable financing, and shall take timely and commercially reasonable steps to secure such financing.

d. Title and Survey Objections. Buyer will have until the end of the Due Diligence Period to deliver to City any written objections to title, environmental, or survey matters (other than the permitted exceptions identified herein) that materially affect marketability or use. Objections not made prior to the end of the Due Diligence Period will be deemed waived; provided, however, that objections pertaining to matters of record first appearing after the end of the Due Diligence Period may be made at any time prior to the closing.

e. Option to Cure. In the event of a title or survey objection, City will have the option, but not the obligation, to cure the objection and will notify Buyer of its election within ten (10) business days after receipt of the objection. In the event that the City elects to cure the objection, it will have sixty (60) days from the date of the notice of election, or such other reasonable time as the parties may agree, to cure the objection. In the event that the City does not elect to cure the objection, or, having elected to cure the objection fails to timely do so to Buyer's reasonable satisfaction, Buyer will have the option to (1) terminate this Agreement and obtain a refund of the Deposit (after which neither party will have any further obligation or liability to the other under this Agreement), (2) waive the objection and close, or (3) undertake the cure of such objection at its own expense (in which case it shall have 60 days to do so).

f. Deed. City shall convey the Premises to Buyer at the closing in fee simple by a municipal quitclaim deed without covenant. Title shall be good and insurable title, free and clear of all encumbrances except (i) easements described herein; (ii) easements for utilities servicing the property, (ii) City ordinances, and (iii) real estate taxes not yet due and payable. Further, Buyer acknowledges that the deed shall contain a restriction stating that in the event that the Premises or any portion thereof shall be exempt from real and personal property taxes, by transfer, conversion, or otherwise, then the then-owner of the exempt portion shall make annual payments to the City in lieu of taxes in the amount equal to the amount of property taxes that would have been assessed on the exempt portion of the real and personal property situated on the Premises had such property remained taxable. Such restriction shall also confirm that Buyer and its successors and assigns shall possess and be vested with all rights and privileges as to abatement and appeal of valuations, rates, and the like as are accorded owners of real and personal property in Maine.

4. INSPECTIONS.

a. During the Due Diligence Period, Buyer and its employees, consultants, contractors and agents shall have the right, at Buyer's expense, to enter on the Premises at reasonable times in order to (i) inspect the same, (ii) conduct engineering studies, percolation tests, geotechnical exams, environmental assessments, and other such studies, tests, exams, and assessments, and (iii) do such other things as Buyer determines, it is sole discretion, to be required to determine the suitability of the Premises for Buyer's intended use (collectively, the "Inspections"). The City acknowledges that such Inspections may include the digging of test pits, which the City hereby approves.

b. Buyer agrees to defend, indemnify and hold harmless the City against any mechanics liens that may arise from the activities of Buyer and its employees, consultants, contractors and agents on the Premises.

c. Buyer shall exercise the access and inspection rights granted hereunder at its sole risk and expense, and Buyer hereby releases the City from, and agrees to indemnify, defend, and hold the City harmless against, any and all losses, costs, claims, expenses and liabilities (including without limitation reasonable attorney fees and costs) (collectively, "Damages") suffered by the City on account of any injury to person or damage to property arising out of the exercise by Buyer of its rights hereunder, except to the extent that such Damages result from the act or omission of the City.

d. Buyer shall cause any contractors, consultants or any other party conducting the Inspections to procure automobile insurance, if applicable, and general public liability insurance coverage in amounts of not less than Four Hundred Thousand Dollars ($400,000.00) per occurrence for bodily injury, death and

property damage, listing the City as an additional insured thereon, and also Workers' Compensation Insurance coverage to the extent required by law; the forms of all such insurance to be subject to City's Corporation Counsel's reasonable satisfaction.

e. In the event that Buyer does not purchase the Premises, Buyer agrees to either return the Premises as nearly as possible to its original condition after conducting the Inspections, or, at the City's option, reimburse the City for any physical damage caused to the Premises in connection with the Inspections; provided, however, the City hereby acknowledges and agrees that the term "physical damage" does not include any disturbance of any pre-existing environmental contamination on the Premises caused by such inspections, studies, tests, exams, and assessments, and that Buyer shall have no obligation to clean-up, remove or take any other action with respect to any pre-existing environmental contamination disturbed thereby.

f. The parties hereto acknowledge and agree that it is a condition to Buyer's obligations under this Agreement that the results of the Inspections be acceptable to Buyer in its sole discretion. If the results of such due diligence are not acceptable to Buyer in its sole discretion, and if Buyer exercises its right to terminate this Agreement, then the City shall refund to Buyer the Deposit, if previously paid, without interest, within thirty (30) days after receipt of Buyer's termination notice, and neither party shall have any further obligations or liabilities under this Agreement except as expressly set forth in this Agreement.

5. **REAL ESTATE TAXES, PRORATIONS AND TRANSFER TAX.** Buyer shall be liable for all real estate taxes beginning as of the start of fiscal year following the closing and continuing thereafter. Because the Property is currently owned by the City of Portland, which is exempt from real estate taxes, no taxes were assessed or will be due for any portion of the current fiscal year, and no taxes will be prorated at the closing. Any utilities for the Property shall be prorated as of the closing. The Maine real estate transfer tax attributable to Buyer's one half shall be paid for by Buyer in accordance with 36 M.R.S.A. § 4641-A. City is exempt from paying the transfer tax pursuant to 36 M.R.S.A. § 4641-C. The recording fee for the deed of conveyance and any expenses relating to Buyer's financing or closing shall be paid for by Buyer.

6. **DEFAULT AND REMEDIES**. In the event that Buyer defaults hereunder for a reason other than the default of the City, City shall retain the deposit as its sole remedy. In the event City defaults under this Agreement, and if Buyer is not then in default hereunder, Buyer shall have the right to pursue specific performance, but at all times may elect in substitution therefor, as its sole remedy, the right to a return of its deposit.

7. **RISK OF LOSS.** The risk of loss or damage to the Premises by fire, eminent domain, condemnation, or otherwise, until transfer of title hereunder, is assumed by the City. The Premises is to be delivered in substantially the same condition as of the date of this Agreement unless otherwise stated. In the event City is not able to deliver

the Premises as stated, Buyer may terminate this Agreement and receive a refund of the Deposit without interest, and neither party shall have any further obligations or liabilities under this Agreement except as expressly set forth in this Agreement.

8. **PROPERTY SOLD "AS IS, WHERE IS**." Buyer acknowledges that Buyer has had an opportunity to inspect the Premises, and to hire professionals to do so, and that Premises will be sold "as is, where is" and "with all faults." City, and its agents, make no representations or warranties with respect to the accuracy of any statement as to boundaries or acreage, or as to any other matters contained in any description of the Premises, or as to the fitness of the Premises for a particular purpose, or as to development rights, merchantability, habitability, or as to any other matter, including without limitation, land use, zoning and subdivision issues or the environmental, mechanical, or structural condition of the Premises. Acceptance by Buyer of the Deed at closing and payment of the purchase price shall be deemed to be full performance and discharge by the City of every agreement and obligation contained herein.

9. **ENVIRONMENTAL INDEMNIFICATION**. Buyer covenants and agrees to indemnify, defend, and hold the City harmless from and against any and all claims, damages, losses, liabilities, obligations, settlement payments, penalties, assessments, citations, directives, claims, litigation, demands, defenses, judgments, costs, or expenses of any kind, including, without limitation, reasonable attorneys', consultants', and experts' fees incurred in investigating, defending, settling, or prosecuting any claim, litigation or proceeding, that may at any time be imposed upon, incurred by or asserted or awarded against Buyer or the City and relating directly or indirectly to the violation of or compliance with any federal, state, or local environmental laws, rules, or regulations governing the release, handling or storage of hazardous wastes or hazardous materials and affecting all or any portion of the Premises, except to the extent that such a claim results directly from the release, handling or storage of hazardous wastes or hazardous materials on the Premises. This duty to indemnify, defend, and hold harmless shall be included in a covenant in the deed and shall run with the land conveyed and be binding upon Buyer's successors, assigns, and transferees.

10. **CONDITIONS PRECEDENT TO CLOSING.** The City shall pursue removal of the restrictions limiting development of and burdening the Premises stated or described in the deed to the City from the State of Maine dated September 26, 2005 and recorded in the Cumberland County Registry of Deeds in Book 23202, Page 38. In the event the City is unable to obtain such removal prior to the Closing Date, as defined below, the, unless Buyer elects to waive such restrictions in writing, the City shall refund the Deposit, if previously paid, without interest, and this Agreement shall be terminated and neither party shall have any further obligations or liabilities under this Agreement. Buyer acknowledges and agrees that the City is acting as Seller, and not in its regulatory capacity, in connection with this Agreement. The acceptance or recording of a deed to the Buyer of the Premises will be conclusive and final evidence of the consent by Buyer to the waiver or completion of all these conditions.

11. **CLOSING**. Time is of the essence in the performance of this agreement. The closing shall be held at the offices of Buyer's counsel at a time agreeable to the parties on or before the day that is five months after the date of this Agreement (the "Closing Date"). At the Closing:

    a. City shall execute, acknowledge and deliver to Buyer a municipal quitclaim deed conveying to Buyer good and insurable title to the Premises, free and clear of all encumbrances except as otherwise set forth herein.

    b. Buyer shall deliver the balance of the Purchase Price to the City by wire transfer; and

    c. Each party shall deliver to the other such other documents, certificates and the like as may be required herein or as may be necessary to carry out the obligations under this Agreement.

    d. Buyer shall deliver evidence, reasonably satisfactory to City's Corporation Counsel, that the entity receiving title to the Premises is in good standing under Maine law, and that the individuals acting to Closing and executing documents on behalf of Buyer are authorized to do so.

12. **BUYER'S POST CLOSING OBLIGATIONS; RIGHTS OF CITY TO REPURCHASE PROPERTY.** Buyer agrees to commence development of the project depicted on the attached Plan (Exhibit B), as presented to the City's Economic Development Committee on July 19, 2017, and specifically including at least fifty dwelling units depicted therein, 35% of which will be market rate, and 65% of which shall affordable to households at or below 60% of the area median income (the "Project") within twelve (12) months after closing. If Buyer, its successors, assigns, or transferees fails to submit a complete site plan review application for the Project on the Property within 12 months after the closing, and construct the buildings which are part of the Project within thirty (30) months after closing, the City shall have the right, but not the obligation, to repurchase the Premises at the lesser of (1) the Purchase Price plus all construction and approval expenses incurred by Buyer, or successors, to that juncture, or (2) the fair market value of the Premises determined by an appraiser agreed upon by the parties. The provisions of this paragraph will survive closing, and the City's deed to Buyer shall include a reference to the City's option to repurchase the Premises, and/or a Declaration of Covenants, Conditions and Restrictions, and Option to Repurchase with the provisions of this paragraph with greater detail, executed before or at the time of Closing, shall be recorded in the Cumberland County Registry of Deeds. This right to repurchase shall be assignable by the City

13. **ENTIRE AGREEMENT.** This Agreement represents the entire and complete Agreement and understanding between the parties and supersedes any prior agreement or understanding, written or oral, between the parties with respect to the acquisition or exchange of the Property hereunder. This Agreement cannot be amended except by written instrument executed by City and Buyer.

14. **NON-WAIVER**. No waiver of any breach of any one or more of the conditions of this Agreement by either party shall be deemed to imply or constitute a waiver of any succeeding or other breach hereunder.

15. **HEADINGS AND CAPTIONS.** The headings and captions appearing herein are for the convenience of reference only and shall not in any way affect the substantive provisions hereof.

16. **BINDING EFFECT**. This Agreement shall be binding upon and inure to the benefit of the parties hereto and their respective heirs, administrators, successors and assigns.

17. **TIME.** The City and Buyer each confirm and agree that each of the time periods set forth herein are essential provisions of the terms of this Agreement.

18. **GOVERNING LAW**. This Agreement shall be construed in all respects in accordance with, and governed by, the laws of the State of Maine. All parties hereto hereby consent to the exclusive jurisdiction of the Superior Court for the County of Cumberland in the State of Maine, for all actions, proceedings and litigation arising from or relating directly or indirectly to this Agreement or any of the obligations hereunder, and any dispute not otherwise resolved as provided herein shall be litigated solely in said Court. If any provision of this Agreement is determined to be invalid or unenforceable, it shall not affect the validity or enforcement of the remaining provisions hereof.

19. **NOTICE**. All notices, demands and other communications hereunder shall be in writing and shall be deemed to have been duly given on the date of service if served personally on the party to whom notice is to be given, or on the first business day after mailing if mailed to the party to whom notice is to be given by first class mail, postage prepaid, certified, return receipt requested, addressed to the recipient at the addresses set forth below. Either party may change addresses for purposes of this paragraph by giving the other party notice of the new address in the manner described herein.

FOR THE City:	City of Portland ATTN: City MANAGER 389 Congress Street Portland, ME 04101
With a copy to:	The Office of the Corporation Counsel at the same address.
FOR Buyer:	Ross Y. Furman Box Two Portland, ME 04112
With a copy to:	Timothy H. Norton, Esq. Kelly, Remmel & Zimmerman 53 Exchange Street

P.O. Box 597
Portland, ME 04112

20. **SIGNATURES; MULTIPLE COUNTERPARTS.** This Agreement may be executed in any number of counterparts and by different parties in separate counterparts. Each counterpart when so executed shall be deemed to be an original and all of which together shall constitute one and the same agreement.

21. **BROKERS.** City shall pay CBRE | The Boulos Company at closing a brokerage commission equal to five percent (5%) of the Purchase Price at closing. The CITY and Buyer each represent and warrant that they have not dealt with a real estate broker in connection with this transaction other than CBRE | The Boulos Company. Buyer agrees to indemnify and hold harmless City from any claims made by any broker should Buyer's representation in this paragraph be false. Subject to the limitations of liability set forth in the Maine Tort Claims Act, City agrees to indemnify and hold harmless Buyer from any claims made by any broker should City's representation in this paragraph be false. The foregoing indemnities shall include all legal fees and costs incurred in defense against any such claim, and shall survive closing.

22. **RECITALS INCORPORATED BY REFERENCE**. The recitals set forth above are incorporated herein by reference and made a part of this Agreement.

23. **ASSIGNMENT.** Buyer may assign his rights and obligations under this Agreement to a limited liability company or other entity prior to Closing and the City shall acknowledge and consent to such assignment.

IN WITNESS WHEREOF, the parties hereto have caused this instrument to be executed by their duly authorized officers or representatives, as of the day and year first written above.

City OF PORTLAND

WITNESS

Jon P. Jennings
Its City Manager

WITNESS

ROSS Y. FURMAN

Approved as to Form:

Corporation Counsel's Office

Parcel Map

1	55 Portland Street
2	44 Hanover Street
3	56 Parris Street
4	82 Hanover Street
5	65 Hanover Street
6	178 Kennebec Street

EXHIBIT A

EXHIBIT B

furman place on kennebec
PROPOSED BRATTLE, KENNEBEC
& PARRIS STREET DEVELOPMENT
PORTLAND, MAINE
ONE WAY

THE SZANTON COMPANY
An affiliate of the Monks Companies

The Szanton Company

The mission of The Szanton Company (TSC) is to create comfortable, attractive, and affordable rental housing. We do this by:

- Creating beautiful apartments of high quality in locations in or near downtowns, adding vitality to our cities and towns;
- Serving people with diverse incomes;
- Incorporating the highest standards of environmental responsibility in our properties, thereby minimizing their impact on the earth's environment;
- Creating amenities for our residents which enhance their quality of life;
- Building properties which provide a consistent financial return to their owners, thus ensuring their stability for residents, lenders, investors, and neighborhoods.

We have extensive experience developing multifamily rental properties in Maine and New Hampshire, including seven existing properties totaling 334 units. Three of these are in Portland: Casco Terrace at 41 State Street; Walker Terrace at 1 Walker Street and 53 Danforth Street. We have two additional properties in the development pipeline, a 59-unit project under construction in Bath, Maine, and a 63-unit project in pre-development in Lewiston, Maine.

We have partnered with Ross Furman to provide housing on land he owns on the block bordered by Kennebec, Parris, Brattle and Lancaster Streets.

We understand that the last piece of the block (approximately 10,000 square feet closest to and abutting Kennebec St.) is subject to the City's RFP process.

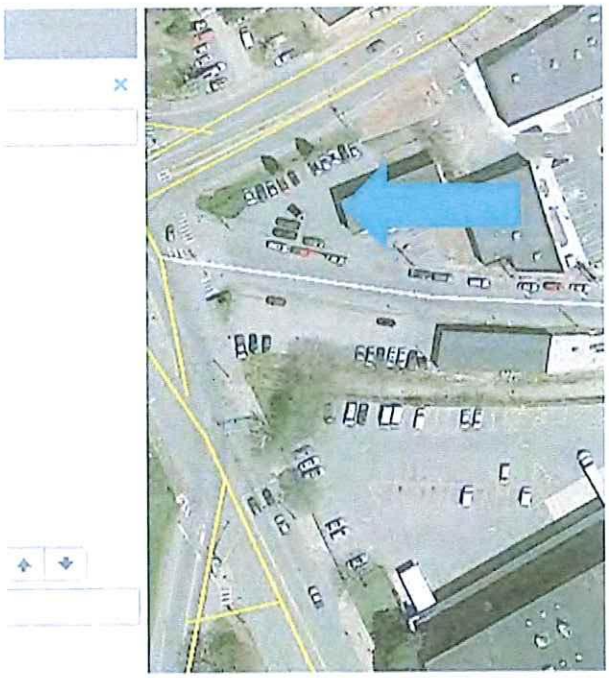

Project Details

We are working with Ross Furman's team to incorporate housing into their multi-phase development of the block. Included in these materials is a site plan showing the block and the three phases of development. Conceptually, the first phase would include the area closest to Kennebec Street. It would include ground-level retail and/or artist studio space with approximately 50 units of housing on the upper floors. The housing would be rental, a mix of studio, 1-, 2-, and 3-bedroom apartments. We've included a concept floor-plan of Phase One.

The site has some unique advantages for residential development:

- The City has identified the Bay Side neighborhood as a priority for redevelopment. Kennebec Street is a prominent street in Bayside, and street-level retail will dovetail well with surrounding buildings.
- A mixed-use residential/retail building will bring new residents to live, work, and shop in Bayside, reinforcing the urban fabric and adding new vitality to the core of the City.
- The site is within walking distance of a variety of services and destinations for daily living (e.g., banks, library, schools, Deering Oaks, etc.) as well as employers and public transportation.

We expect the income mix targeted for this development will be 35% market rate, and 65% affordable (aimed at those at or below 60% of the area median income.)

The residents are intended to mirror the mix of people, incomes, and occupations in Portland. We have seven other properties with similar unit mixes and we know that tenants in income-restricted units will include people with jobs at the lower end of the wage scale, such as nurse's aides, entry-level workers in local businesses, clerks, artists, etc. The market-rate units are likely to have attorneys, doctors, or other urban professionals as tenants.

Management

SACO FALLS MANAGEMENT

We have an in-house property management company called Saco Falls Management (SFM). Our staff is dedicated to making our residents the central focus of our organization and creating a rental experience which far exceeds our residents' expectations, both in level of upkeep of properties and responsiveness to their needs.

For more information on our management company, please visit www.sacofallsmanagement.com.

Gorham
SAVINGS BANK

April 26, 2017

Mr. Nate Stevens
CBRE/The Boulos Company
One Canal Plaza
Portland, ME 04101

RE: Ross Furman: Portland Public Works property

Dear Nate:

I am writing to inform you that Gorham Savings Bank has been doing business with Ross Furman since September of 2006. He has handled his banking relationship in a fully satisfactory manner. Based on Ross' history with the Bank, he has exhibited the financial capacity to complete the proposed purchase of the Portland Public Works property.

If you should need further information, please call me at 222-1498.

Sincerely,

Frederick G. Proctor
Vice President

Cc: Ross Furman

10 Wentworth Drive, Gorham, ME 04038 • Tel. (207) 839-3342
Customer Service Center (207) 839-4796 • www.gorhamsavingsbank.com

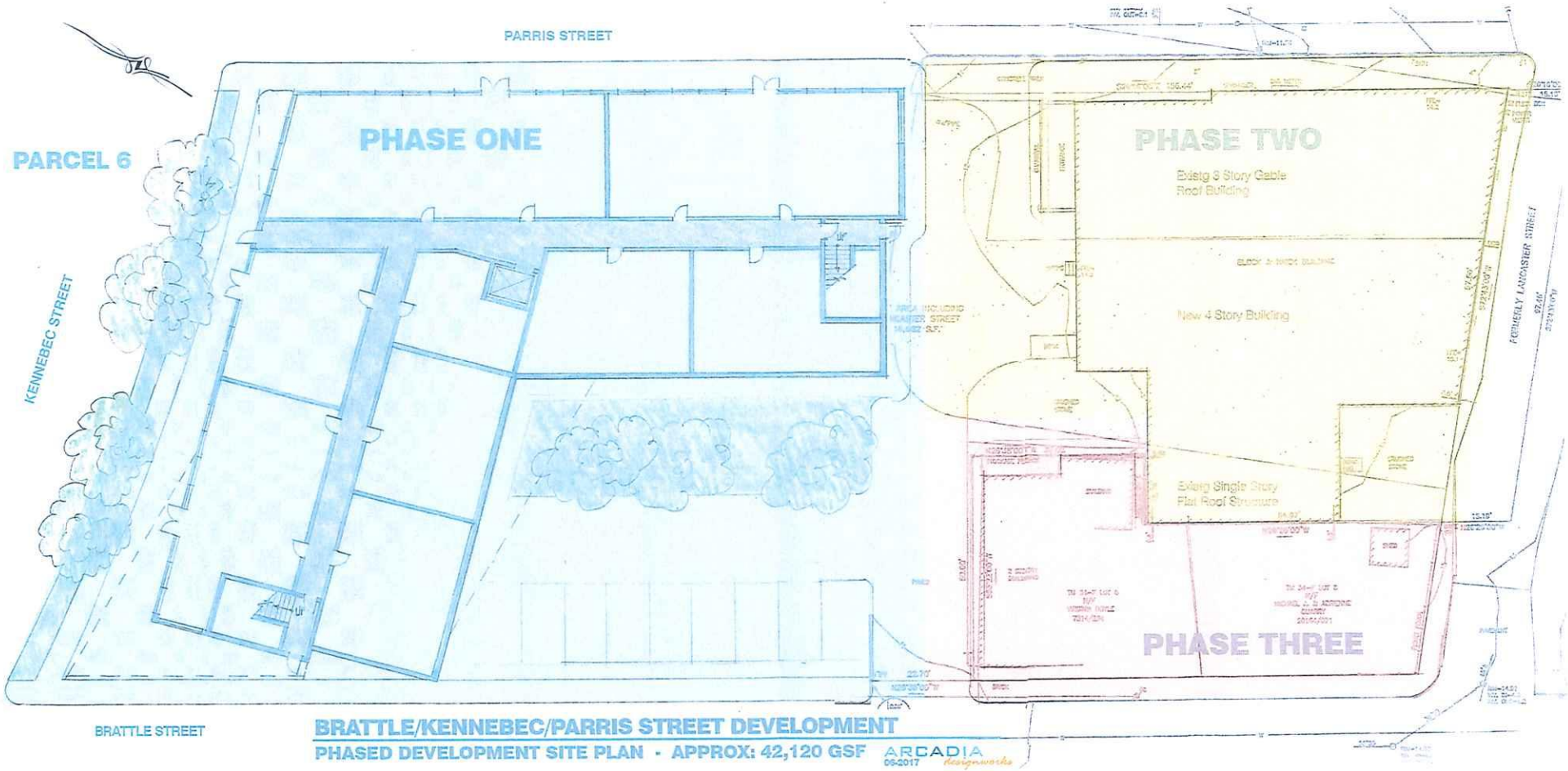

BRATTLE/KENNEBEC/PARRIS STREET DEVELOPMENT

PHASED DEVELOPMENT SITE PLAN - APPROX: 42,120 GSF ARCADIA 06-2017 Designworks

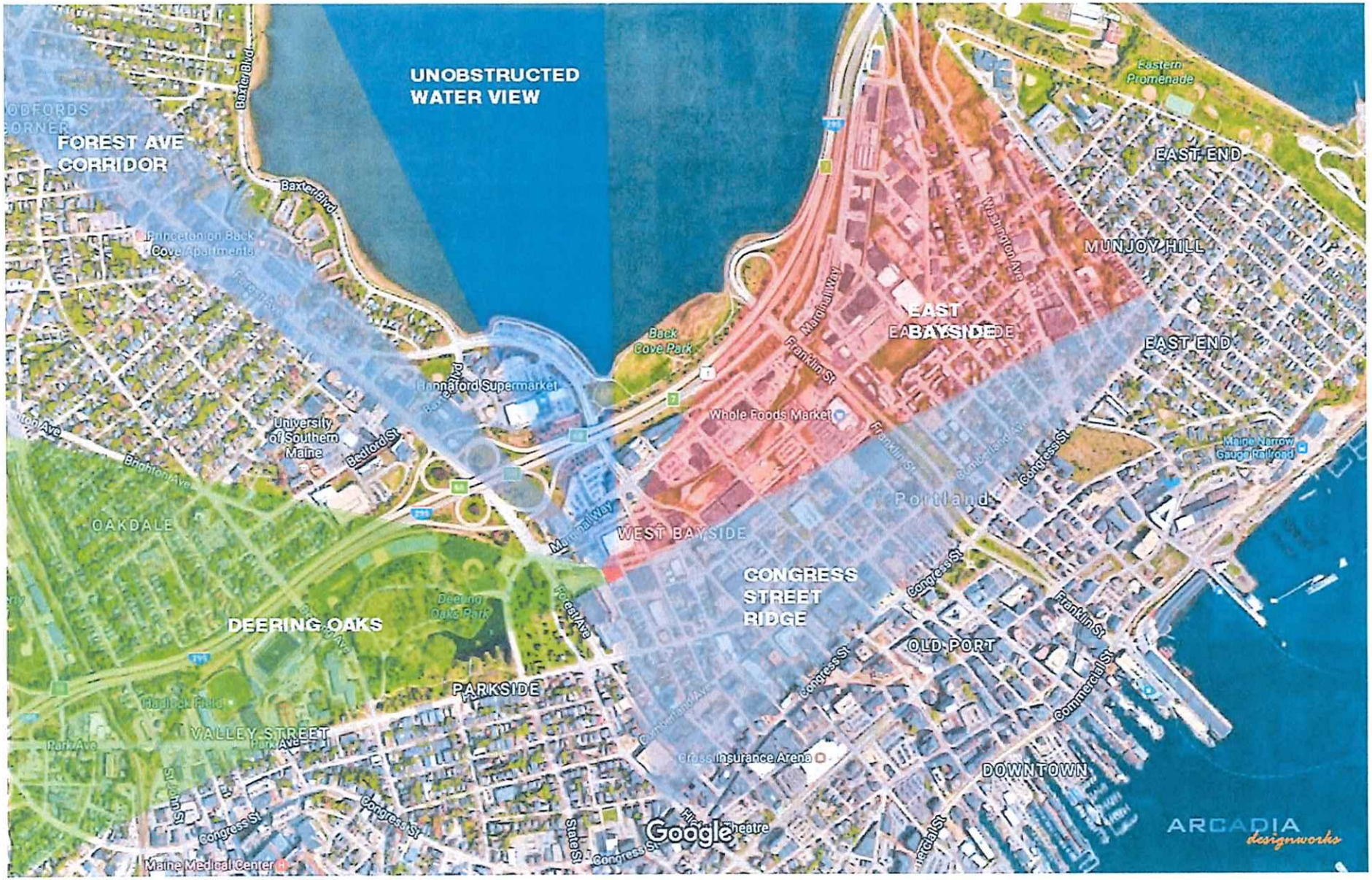
UNOBSTRUCTED WATER VIEW
FOREST AVE CORRIDOR
EAST END
MUNJOY HILL
EAST BAYSIDE
EAST END
WEST BAYSIDE
CONGRESS STREET RIDGE
OLD PORT
DOWNTOWN
DEERING OAKS
OAKDALE
PARKSIDE
VALLEY STREET
Eastern Promenade
Back Cove Park
Hannaford Supermarket
Whole Foods Market
University of Southern Maine
Princeton on Back Cove Apartments
Deering Oaks Park
Maine Narrow Gauge Railroad
Cross Insurance Arena
Maine Medical Center
Portland
Baxter Blvd
Bedford St
Brighton Ave
Marginal Way
Franklin St
Washington Ave
Congress St
Forest Ave
Park Ave
State St
Commercial St
Google
ARCADIA designworks

A - Apartment
R - Retail
MU - Mechanical/Utility

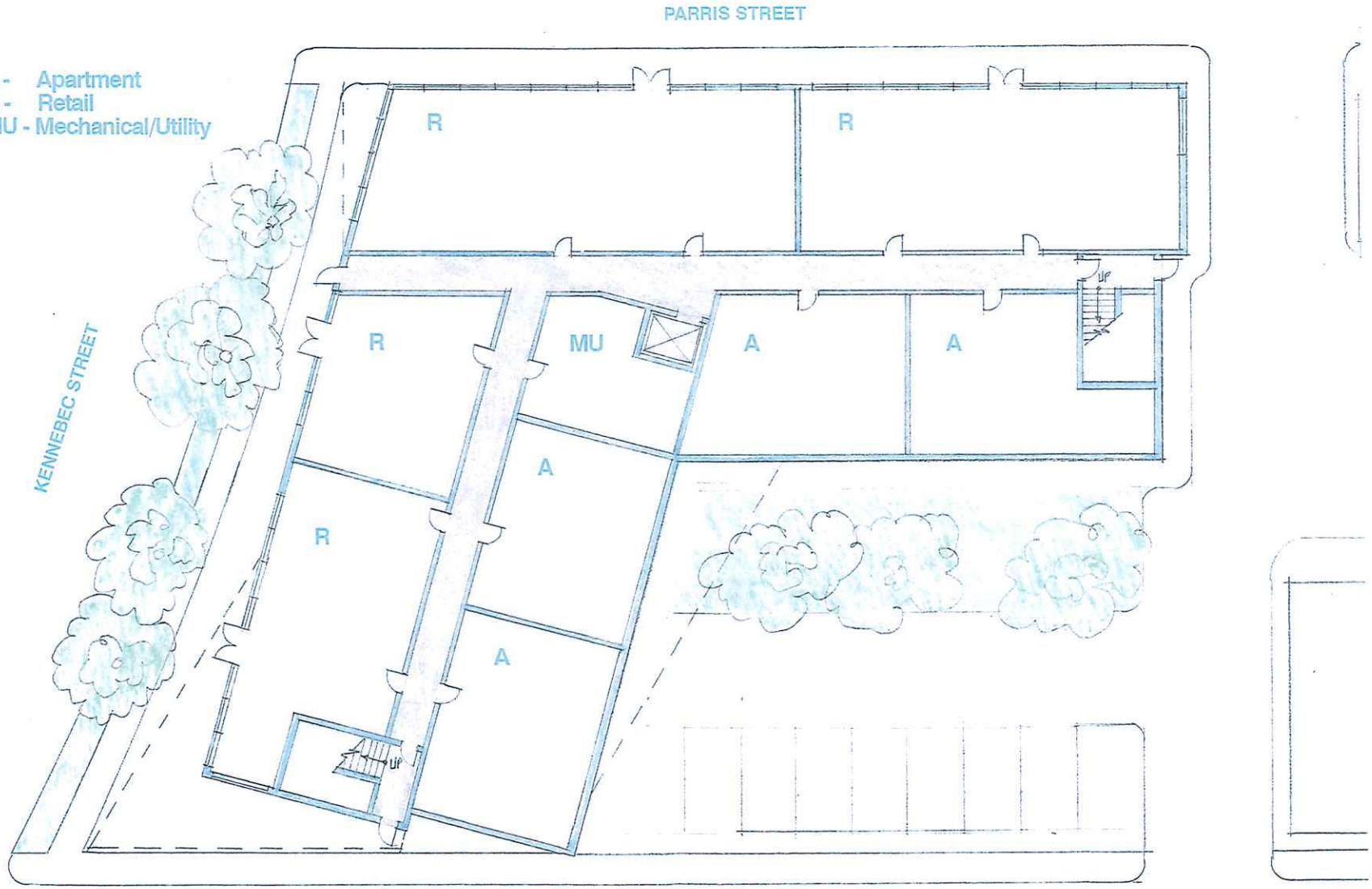

furman place on kennebec

BRATTLE/KENNEBEC/PARRIS STREET DEVELOPMENT

BUILDING CONCEPT - GROUND LEVEL PLAN 13,088 GSF

ARCADIA designworks
06-2017

A - Apartment
R - Retail
MU - Mechanical/Utility

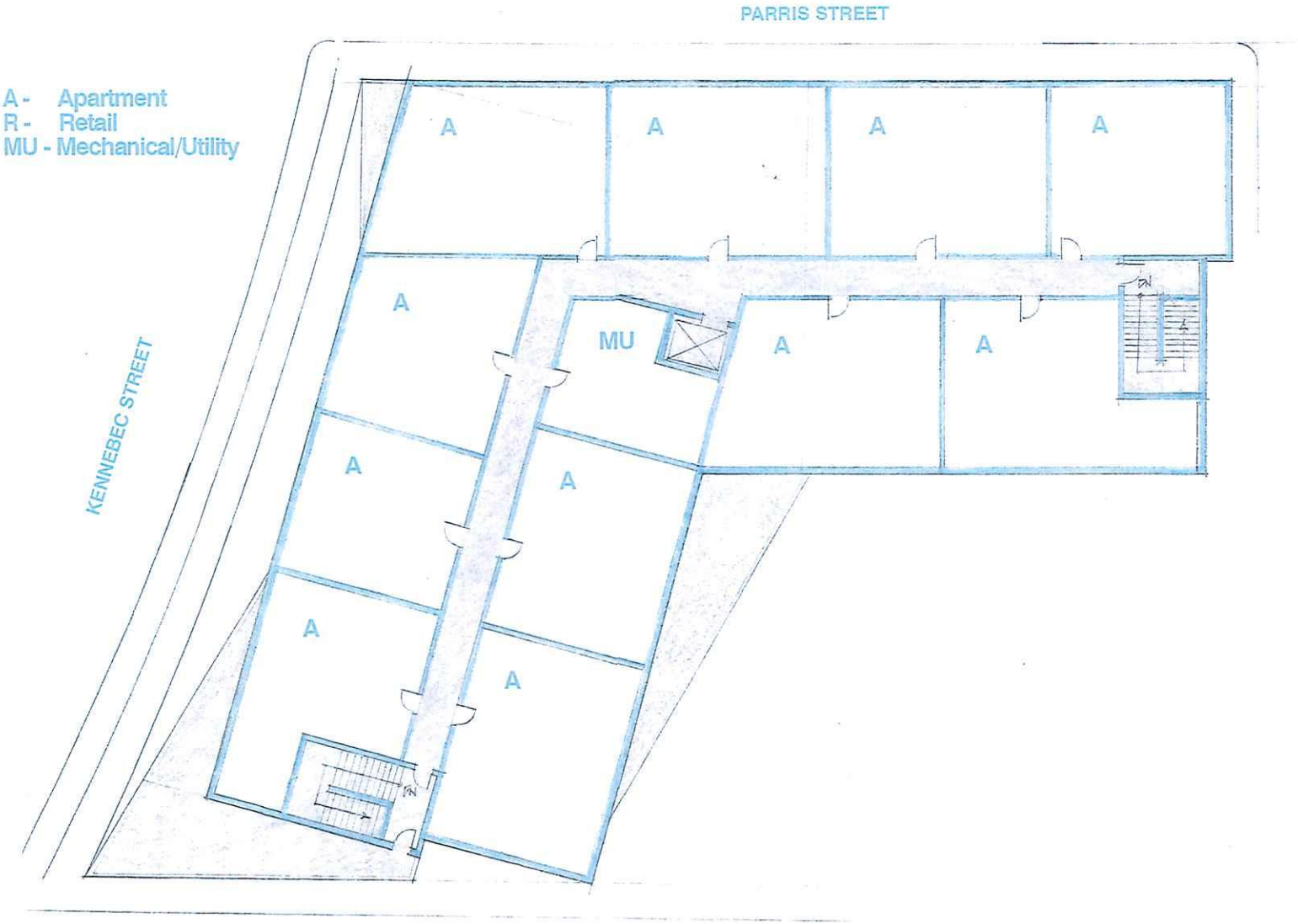

furman place on kennebec

BRATTLE/KENNEBEC/PARRIS STREET DEVELOPMENT

BUILDING CONCEPT - UPPER LEVEL PLAN **13,088 GSF**

ARCADIA designworks 06-2017

THE SZANTON COMPANY
An affiliate of the Monks Compan
KENNEBEC
furman place on kennebec
ARCADIA

PHASE TWO:
NEW SYSTEMS - ARTIST STUDIOS AND
NEW MEDIA & DESIGN OFFICE BUILDING
PORTLAND, MAINE
KENNEBEC BLOC
B
C
D
A
BUILDING FACADE FORMS STREET FRONT. LAND AND HARDSCAPING PROVIDED FOR PUBLIC USE AND COMPLIMENTARY TO PORTLAND TRAILS RIGHT OF WAY. A
5-STORY BUILDING CONSTRUCTED USING GREEN, AFFORDABLE MATERIALS AND ENERGY EFFICIENT MECHANICAL SYSTEMS, ENABLING 65% AFFORDABLE HOUSING AND 35% MARKET RATE APARTMENTS. B
BUILDING PROVIDES AFFORDABLE SPACE FOR ARTIST STUDIOS ON THE 1ST AND 2ND LEVELS AND NEW MEDIA AND DESIGNER STUDIOS ON THE 3RD AND 4TH LEVELS. C
OFF STREET PARKING AND BUILDING COMMONS GARDEN AREA. D
PHASE ONE:
FURMAN PLACE - AFFORDABLE
HOUSING AND COMMERCIAL
RETAIL BUILDING
PARCEL 5
PHASE ONE
PHASE TWO
PHASE THREE
BRATTLE KENNEBEC PARRIS STREET DEVELOPMENT
NEW SYSTEMS - SOUTHEAST VIEW
NEW SYSTEMS - NORTHWEST VIEW

FIRST AMENDMENT
TO
PURCHASE AND SALE AGREEMENT

THIS FIRST AMENDMENT is made as of the 13th day of March, 2018, by and between the CITY OF PORTLAND, a body politic and corporate located in Cumberland County, Maine ("Seller") and ROSS Y. FURMAN, an individual having a mailing address of Box Two, Portland, Maine 04112 (the "Buyer").

WITNESSETH:

WHEREAS, Seller and Buyer entered into a certain Purchase and Sale Agreement dated October 10, 2017 (the "Agreement") with respect to certain real property located at 178 Kennebec Street, Portland, Maine; and

WHEREAS, Seller and Buyer wish to amend the Agreement as provided herein:

NOW, THEREFORE, in consideration of the foregoing and other good and valuable consideration, the receipt and sufficiency of which is hereby acknowledged, Seller and Buyer hereby agree as follows:

1. The Agreement is hereby amended by deleting from section 11 of the Agreement the words "the day that is five months after the date of this Agreement" and replacing therefore the words "April 13, 2018," meaning and intended hereby to fix the Closing Date under the Agreement to on or before April 13, 2018.

2. Except as specifically amended hereby, the Agreement shall remain in full force and effect, and the parties hereto ratify the terms and conditions of the Agreement.

(Signature Page Follows)

IN WITNESS WHEREOF, Seller and Buyer have caused this Agreement to be executed by their duly authorized representatives or officers, as of the date first written above.

WITNESS:

Jon P. Jennings

CITY OF PORTLAND

By:

Its City Manager

WITNESS:

Ryan McCyr

By: Rossy Furman
ROSSY FURMAN

Approved as to Form:
City Corporation Counsel's Office

2 = 2

CONFIRMATORY
RELEASE DEED

The **PORTLAND TERMINAL COMPANY,** a corporation duly organized and existing under the laws of the State of Maine, with offices at 1700 Iron Horse Park, North Billerica, Middlesex County, Massachusetts (the "Grantor") in consideration of One Dollar ($1.00) and other valuable consideration paid to it by **ROSS Y. FURMAN ,** with a mailing address of 41 Brattle Street, Portland, Maine 04101 (the "Grantee") hereby grants to the Grantee all the Grantor's right, title and interest, without any warranties or covenants of title whatsoever, in a certain parcel of land, and the buildings, bridges, structures, crossings, fixtures and improvements thereon, if any, situated in Portland, County of Cumberland, State of Maine (the "Premises") described as follows:

SEE EXHIBIT "A" ATTACHED HERETO AND
MADE A PART HEREOF BY THIS REFERENCE.

MAINE REAL ESTATE TAX PAID

This conveyance is subject to the following reservations, conditions, covenants and agreements:

1. This conveyance is made without granting any right of way, either by necessity or otherwise, over any remaining land or location of the Grantor.

2. ~~The Grantor hereby reserves a permanent, exclusive right of way and easement in, on, over, under, across and through the Premises for the purpose of accessing, constructing, installing, operating, maintaining, modifying, repairing, replacing, relocating and removing a telecommunications system or other system for transmission of intelligence or information by any means, whether now existing or hereafter devised, including such poles, pipes, wires, fibers, fiber optic cables, repeater stations, attachments, appurtenances, structures or other equipment and property of any description necessary or useful for the same (the "Telecommunications Easement"). The Grantor further reserves the right to freely lease, license, mortgage, assign, pledge and otherwise alienate the Telecommunications Easement. The Grantee hereby covenants with the Grantor to recognize the Telecommunications Easement and, without the payment of any further consideration, to execute, acknowledge and deliver such instruments suitable for~~

~~recording with the registry of deeds as the Grantor may reasonably require to acknowledge title to the Telecommunications Easement in the Grantor. The Grantor covenants to reasonably repair and restore the surface of the easement area after any work.~~

3. The Grantor excepts from this conveyance any and all railroad tracks, railroad track materials (including, but not limited to, ties, connections, switches and ballast) and/or related equipment of any description located in whole or in part within the Premises (the "Trackage") and this conveyance is subject to the right of the Grantor to enter the Premises from time to time and at any and all times within the ninety (90) day period commencing with and subsequent to the date of delivery of this deed, with such men, equipment and materials as, in the reasonable opinion of the Principal Engineering Officer of the Grantor, are necessary for the removal of the Trackage. Days during the months of December, January, February and March shall not be included in the aforesaid ninety (90) day period. If the Trackage is not removed from the Premises by the expiration of said ninety (90) day period, the Trackage shall be deemed abandoned by the Grantor and shall then become the property of the Grantee.

4. ~~The Grantor excepts from this conveyance any and all advertising signs and/or billboards located upon the Premises which are not owned by the Grantor. Furthermore, this conveyance is subject to the right of the owners of said signs and/or billboards to go upon the Premises and remove them within ninety (90) days from the date of delivery of this deed.~~

5. By the acceptance of this deed and as part consideration therefor, the Grantee hereby assumes any and all agreements, covenants, obligations and liabilities of the Grantor in respect to any underground facilities, drainage culverts, walls, crossings and/or other structures of any nature and description located in whole or in part within the Premises.

6. By the acceptance of this deed and as part consideration therefor, the Grantee agrees to Irrevocably waives, gives up and renounces any and all claims or causes of action against the Grantor in respect of claims, suites and/or enforcement actions (including any administrative or judicial proceedings and any remedial, removal or response actions) ever asserted, threatened, instituted or requested by any person and/or governmental agency on account of: (a) any release of oil or hazardous materials or substances of any description on, upon or into the Premises in contravention of any ordinance, law or statute (including, but not limited to, the Comprehensive Environmental Response, Compensation and Liability Act of 1980 (42 U.S.C. Section 9601, et seq., as amended); and (b) any and all damage to real or personal property, natural resources and/or harm or injury to persons alleged to have resulted from such release of oil or hazardous materials or substances.

7. ~~By the acceptance of this deed and as part consideration therefor, the Grantee hereby agrees to build and forever maintain fences (together with any necessary gates), suitable to the Principal Engineering Officer of the Grantor, along the boundaries of the Premises which are common to remaining land or location of the Grantor (the "Fences"), if Fences are ever required in the sole and reasonable opinion of said Principal Engineering Officer.~~

8. ~~This conveyance is subject to the following restriction for the benefit of other land or location of the Grantor, to wit: that from the date of delivery of this deed, the Grantor shall not be liable to the Grantee or any lessee or user of the Premises (or any part thereof) for any damage to any buildings or property upon them caused by fire, whether communicated directly or indirectly by or from locomotive engines of any description upon the railroad operated by the Grantor, or otherwise.~~

9. By the acceptance of this deed and as part consideration therefor, the Grantee hereby agrees to make no use of the Premises which, in the sole and reasonable opinion of the Principal Engineering Officer of the Grantor, adversely affects, increases or decreases drainage to, from, upon or in any remaining land or location of the Grantor. The Grantee agrees to indemnify and save the Grantor harmless from and against any and all loss, cost, damage or expense including, but not limited to, the cost of defending all claims and/or suits for property damage, personal injury or death arising out of or in any way attributable to any breach of the foregoing covenant.

10. The Grantor excepts from this conveyance any and all overhead, surface or underground signal and communication line facilities of the Grantor located within the limits of the Premises and this conveyance is subject to the Grantor's use of any such facilities in their present locations and entry upon the Premises from time to time to maintain, repair, replace, renew, relay or remove such facilities.

11. Whenever used in this deed, the term "Grantor" shall not only refer to the **PORTLAND TERMINAL COMPANY**, but also its successors, assigns and affiliates and the term "Grantee" shall not only refer to the above-named Grantee, but also the Grantee's successors, assigns and grantees, as the case maybe.

12. The several exceptions, reservations, conditions, covenants and agreements contained in this deed shall be deemed to run with the land and be binding upon the Grantee forever. In addition to the acceptance and recording of this deed, the Grantee hereby signifies assent to the said several exceptions, reservations, conditions, covenants and agreements, by joining in its execution.

13. This Confirmatory Deed is given to replace the original Deed dated May 6, 1999 from the Grantor to the Grantee in respect of a certain parcel of land situated on the easterly side of Brattle Street and the westerly side of Parris Street in the City of

Portland, County of Cumberland, State of Maine, said parcel containing 6,700 square feet herein described, Grantee paid said consideration of Thirty Five Thousand One Hundred Seventy Five and 00/100 ($35,175.00) Dollars, said original deed never having been recorded.

IN WITNESS WHEREOF, the said **PORTLAND TERMINAL COMPANY** has caused this release deed to be executed in its name and its corporate seal to be hereto affixed by David A. Fink, its President, thereunto duly authorized this 12th day of March, 2014.

GRANTOR:
PORTLAND TERMINAL COMPANY

Witness

By: _____
David A. Fink, President

SEAL

GRANTEE:

Witness

By: _____
Ross Y. Furman

COMMONWEALTH OF MASSACHUSETTS

Middlesex, ss March 12, 2014

On this 12th day of March, 2014 before me, the undersigned notary public, personally appeared David A. Fink, the President of the **PORTLAND TERMINAL COMPANY** proved to me through satisfactory evidence of identification, which was personal knowledge, to be the person whose name is signed on the preceding or attached document, and acknowledged to me that he signed it voluntarily for its stated purpose.

Notary Public: Roland Theriault
My Commission Expires:

ROLAND L. THERIAULT
Notary Public
Commonwealth of Massachusetts
My Commission Expires
August 5, 2016

STATE OF MAINE

Cumberland, ss 3-26-, 2014

On this 26 day of March, 2014 before me, the undersigned notary public, personally appeared Ross Y. Furman proved to me through satisfactory evidence of identification, which was Licence, to be the person whose name is signed on the preceding or attached document, and acknowledged to me that he signed it voluntarily for its stated purpose.

Notary Public: Jason Balko
My Commission Expires: 8-13-2020

JASON BALKO
Notary Public
Maine
My Commission Expires Aug 13, 2020

Exhibit A

PORTLAND TERMINAL COMPANY
TO
ROSS Y. FURMAN
PARCEL F-2

A certain lot or parcel of land situated on the easterly side of Brattle Street and the westerly side of Parris Street in the City of Portland, County of Cumberland and State of Maine being bounded and described as follows:

Beginning at a rod on the easterly side of said Brattle Street marking the northwesterly corner of land conveyed to Gregory B. Brown by deed recorded in the Cumberland County Registry of Deeds in Book 11,525, Page 259, said rod also being 645.90' northerly, along said easterly side of Brattle Street, from the northerly side of Portland Street;

Thence by land of Brown on a curve to the left whose radius is 2,757.50' an arc distance of 19.43, to the westerly corner of the parcel conveyed to Franklin R. Redlon recorded in Book 1340, Page 137, said corner being found on a chord of S 84° 01' 05" E a distance of 19.43';

Thence by the northerly line of said Redlon land N 75° 59' 22" E a distance of 18.00' to a point;

Thence S 5° 10' 32" E and being 2.00' easterly of the steps, leading to Brown's House, a distance of 3.10' to a point;

Thence N 85° 55' 33" E and being 2.00' northerly of Brown's house, a distance of 23.10' to a point;

Thence S 4° 4' 27" E and being 2' easterly, of Brown's house, a distance of 6.79' to a point on the northerly line of said Brown;

Thence by the northerly line of said Brown and the northerly line of land conveyed to Harrison O. Elliott by deed recorded in Book 2390, Page 224, on a curve to the left whose radius is 2,757.50' an arc distance of 76.21' to a rod on the westerly side of said Parris Street, said rod being found on a long chord of S 85° 52' 22" E a distance of 76.20';

Thence by the westerly side of Parris Street N 12° 10' 37" W a distance of 51.93' to a rod and other land of the Grantor, said rod being on a non tangent curve;

Thence by said Grantor land on a curve to the left whose radius is 2707.50 an arc distance of 137.69' to a rod being on a non-tangent curve, on the easterly side of said Brattle Street, said rod being found on a chord of N 84° 54' 50" W a distance of 137.67';

Thence by the easterly side of said Brattle Street S 12° 33' 19" E a distance of 52.85' to the point of beginning, comprising 6,700 sq. ft.

Being a portion of the premises conveyed in deed recorded in Book 481, Page 319.

Received
Recorded Register of Deeds
Mar 26,2014 02:52:11P
Cumberland County
Pamela E. Lovley

WARRANTY DEED
Maine Statutory Short Form

Know all Men by these presents,

That **H.B. Eddy Company**, a Maine corporation f/k/a New System Laundry, Inc. for consideration paid, grants to **New Systems Realty, LLC,** a Maine limited liability company with a mailing address of P.O. Box 2, Portland, Maine 04112, with warranty covenants, the land, buildings and improvements thereon, all as located on Parris Street in the City of Portland, County of Cumberland, State of Maine and more particularly described on the attached **Schedule A**.

Also hereby conveying all rights, easements, privileges, and appurtenances belonging to the premises hereinabove described.

Witness my hand this 6th day of March, 2003.

Signed and Delivered in
the presence of:

H.B. EDDY COMPANY

By Daniel B. Eddy
Its Vice President

STATE OF MAINE
CUMBERLAND, SS.

March 6, 2003

Then personally appeared the above named Daniel B. Eddy, Vice President of H.B. Eddy Company, and acknowledged the foregoing instrument to be his free act and deed in said capacity and the free act and deed of H.B. Eddy Company.

Before me,

~~Notary Public~~/Attorney at Law

Printed Name: MICHAEL H. HILL

SCHEDULE A

A certain lot or parcel of land situated in said Portland on the westerly side of Parris Street, bounded and described as follows: Northerly by parcels which Roswell M. Richardson, Administrator of the Estate of Nathan L. Woodbury, sold William H. Conant and Ralph and Ann Work; westerly by the parcels he sold said Works, Margaret O'Brion, Mellen B. Hamilton, et al, and George H. Owen et al.; and southerly by the northerly line of the lot of land with a block of 5 brick houses thereon; which northerly line commences on said street at a point fifteen (15) feet North of the point where the line of the northerly end of said block intersects said street and runs thence westerly parallel or nearly so with said northerly end of said brick block about eighty-one (81) feet to the southeasterly corner of said Owen lot, said lot being seventy-six and one-half (76½) feet on the street and about ninety-eight and three-tenths (98.3) feet on the rear lines and about eighty-one (81) feet deep.

Being the same premises conveyed to Harrison O. Elliot by the New System and Deering Laundry, Inc. by Warranty deed dated January 2, 1958 and recorded in the Cumberland County Registry of Deeds in Book 2390, Page 224; and

Also, another certain lot or parcel of land situated in said Portland and bounded and described as follows: Commencing on the easterly side of Brattle Street at a point forty-five and five-tenths (45.5) feet measuring on said Brattle Street northerly from the northwesterly corner of a lot of land formerly owned by Daniel Glazier which corner is one and six-tenths (1.6) feet northerly from the underpinning of the said Glazier House; thence easterly at right angles from said Brattle Street fifty (50) feet to a point; thence northerly parallel with said street twenty-two and seven tenths (22.7) feet to a point; thence to said street by a line at right angles to said street; thence southerly by said street twenty-two and seven-tenths (22.7) feet to the point of beginning.

Being the same premises conveyed to Harrison O. Elliot by Eleanor S. Evans, et al. by warranty deed dated June 20, 1961 and recorded in the Cumberland County Registry of Deeds in Book 2617 at Page 148.

Also, another certain lot or parcel of land, with the buildings thereon, situated on the Westerly side of Parris Street in the City of Portland, County of Cumberland and State of Maine, bounded and described as follows, viz:

Beginning at the point where the Northerly side line of Lancaster Street intersects the Westerly side line of Parris Street; thence along the Westerly side line of Parris Street in a Northerly direction seventy-nine and seventy-three hundredths (79.73) feet, more or less, to a point fifteen (15) feet Northerly from the point where the line of the northerly end of the brick block upon this lot of land extended, intersects said Parris Street; thence Westerly on a line which is parallel, or nearly parallel with the line of the Northerly end of said brick block, ninety-six and one-half (96½) feet, more or less, to line of land, now or formerly, of David or Daniel Glazier; thence Southerly by said Glazier line, sixty-five and one-half (65½) feet, more or less, to the Northerly side line of said Lancaster Street; thence in an Easterly direction by the Northerly line of said Lancaster Street, about ninety-seven and one-half (97½) feet, more or less, to Parris Street, and the point of beginning.

Being the same premises conveyed to New System Laundry, Inc. by Harrison O. Elliot by his Warranty Deed dated January 2, 1958 and recorded in Cumberland County Registry of Deeds in Book 2390, Page 227.

The above three parcels being the same conveyed to the Grantor hereof by (i)warranty deed dated July 6, 1972 and recorded in the Cumberland County Registry of Deeds in Book 3278, Page 18, and (ii) warranty deed dated January 13, 1975 and recorded in the Cumberland County Registry of Deeds in Book 3640, Page 312.

Meaning and intending to convey the premises shown on a Plan of Land for New System Laundry prepared by Owen Haskell, Inc. dated February 26, 1975 and recorded in the Cumberland County Registry of Deeds in Plan Book 138, Page 16.

Also including, all right, title and interest in and to the discontinued portion of Lancaster Street as attached hereto as Schedule B on the Order of Discontinuance as recorded with the City Clerk, Volume 106, Page 81.

Received
Recorded Register of Deeds
Mar 06,2003 03:40:28P
Cumberland County
John B. O'Brien

3 STATE AND FEDERAL PERMITS

The development is subject to Site Plan and Subdivision approval by the City of Portland and Building Permit(s) are also required. No additional State or Federal Permits are required.

4 LAND ORDINANCE REVIEW

4.1 OVERVIEW

The property currently lies within the City of Portland B7 Mixed Development District zone. The following Space and Bulk requirements apply to the B7 Zone:

	B7 Zone Summary Dimensional and Parking Requirements Applied to 178 Kennebec Street	
Zoning Requirements	B7	Provided
Minimum Lot Size	None	16,553 sf
Minimum Frontage	None	110 ft
Minimum Lot Area per Dwelling Unit	None	360 sf/unit
Minimum Front Yard	None Required	< 1 ft
Minimum Side Yard	None Required	< 1 ft on Brattle 3.5 ft on Parris
Minimum Rear Yard	None Required	Varies
Maximum Street Setback	10 ft	3.5 ft
Maximum lot coverage	100%	44%
Maximum Structure Height	105 ft	83 ft
Parking	TBD by Planning Board	19
Bicycle Parking	2 spaces / 5 units (18 spaces)	18

4.2 SHORELAND ZONING

The site is not located within the Shoreland Zoning District.

5 EASEMENTS OR OTHER BURDENS

5.1 OVERVIEW

Owen Haskell, Inc. completed a boundary and topographic survey of the site in December of 2017. There are no easements or other burdens associated with the site.

6 TECHNICAL AND FINANCIAL CAPACITY

6.1 TECHNICAL CAPACITY

The applicant has assembled a highly qualified team of professionals to plan, permit, and develop construction documents for the project. The Team is working under the direction of Maine Workforce Housing as Project Developers. Professional services will be provided by the following companies and their respective team leaders:

6.2 CONSULTANT TEAM

Civil Engineer	Michael Tadema-Wielandt, P.E. Terradyn Consultants, LLC 565 Congress Street Portland, ME 04101 (207) 632-9010 – Cell (207) 221-1317 – Fax mtw@terradynconsultants.com
Surveyor	Randy Loubier Owen Haskell, Inc. 390 US Route 1, Unit 10 Falmouth, Maine 04105 (207) 774-0424 – Work (207) 774-0511 – Fax rloubier@owenhaskell.com
Architect	David Lloyd Archetype, PA 48 Wharf Street Portland, ME 04101 (207) 772-6022 – Work (207) 772-4056 – Fax lloyd@archetypepa.com
Electrical/ Mechanical Engineer	William Bennett Bennett Engineering P.O. Box 297 Freeport, ME 04032 (207) 865-9475 will@bennettengineering.net

6.3 EXPERIENCE OF PROJECT TEAM

The team of consultants retained by the Developer has expertise and experience in the design of similar projects. Resumes of key personnel for the development team can be provided upon request.

The applicant, Maine Workforce Housing, LLC, has experience in the development and management of residential projects of this scale. A company resume is included in Attachment 6-A.

6.4 FINANCIAL CAPACITY

The applicant has the capacity to finance the proposed project. Evidence of financial capacity for the project is contained in Attachment 6-B.

6.5 CONSTRUCTION COST ESTIMATE

The project has an overall construction cost estimate of $6.6 million. This construction cost value is considered preliminary and subject to change as building design and project layout is refined, etc.

6.6 ATTACHMENTS

Attachment 6-A – Maine Workforce Housing Resume
Attachment 6-B – Evidence of Financial Capacity

ATTACHMENT 6-A

Maine Workforce Housing Resume

Resume of Maine Workforce Housing, LLC

Maine Workforce Housing, LLC has successfully developed the following Low-Income Housing Tax Credit financed properties in Maine:

- Casco Terrace (2004)
- Walker Terrace (2006)
- 53 Danforth (2009)
- The Mill at Saco Falls (2010)
- The Lofts at Saco Falls (2016)
- Huse School Apartments (2017)

In addition to the projects listed above, other projects developed by affiliate companies of Maine Workforce Housing, with the same personnel, include:

- The Squamscott Block (2007) – A New Hampshire Housing Finance Agency project
- The Lofts at Bates Mill (2012)

Maine Workforce Housing, LLC is currently developing a Low-Income Housing Tax Credit project in Lewiston, Maine, The Hartley Block. Once this building is completed (expected 2019), the total will be 456 units of housing in nine projects.

The principals of Maine Workforce Housing, LLC are Nathan Szanton (75% interest and Managing Member) and Robert Monks (25% interest). Complete resumes for Nathan and Bobby are attached.

ATTACHMENT 6-B

Evidence of Financial Capacity

178 Kennebec Street

Financial Capacity

The total project budget is approximately $10,000,000. Financing sources are projected as follows:

After Occupancy

Amount	Source	Description / Notes
$5,040,000	Low-Income Housing Tax Credit (LIHTC) Equity	To be allocated by MaineHousing following their competitive process. Applications are due in September 2018 and notifications are expected in October 2018. MaineHousing allocates the right to take these tax credits, which are spaced out over ten years. These tax credits are sold to investors and the proceeds are used as equity to pay for the construction and other costs of the development.
$780,000	Low-Income Housing Subsidy	Subsidy from MaineHousing that is tied to the allocation of LIHTCs.
$3,015,000	MaineHousing debt	An interest-bearing mortgage on the property and improvements from MaineHousing.
$325,000	City HOME Funding	Deferred loan from the City of Portland. We are applying for this source in April 2018.
840,000	Ross Furman	Unit 1 (first floor) will be owned and financed by Ross Furman.

During Construction

Note: total amount needed during construction is approximately $9,035,462, which is the portion of the total budget required during construction. This total does not include approximately $1,564,000 that is paid at permanent loan closing, including a portion of developer fees; tax/insurance reserves; operating reserves; rent-up reserves; capital replacement reserves; and tax credit monitoring fees.

Amount	**Source**	**Description / Notes**
$7,475,000	Construction Loan from Bank (letter of interest to be obtained as part of tax credit application)	Construction loan for the duration of construction and lease-up, typically 12-14 months.
$1,000,000	Low-Income Housing Tax Credit Equity	A portion of the tax credit equity is contributed during construction, per IRS rules.
$320,000	MaineHousing Subsidy	50% of their total award is available for construction financing.
$162,500	City HOME Funding	We will ask for the City to provide 50% of their award for construction financing.

7 CONSTRUCTION MANAGEMENT PLAN

The following information is provided in accordance with the City of Portland Code of Ordinances Chapter 14 Land Use, Section 14-527(g)(1).

7.1 CONSTRUCTION MANAGEMENT PLAN

Maine Workforce Housing, LLC is seeking to commence construction of 178 Kennebec Street in May of 2019 and complete work by June of 2020. The construction will involve site work and new building construction. The attached construction plan outlines the anticipated timeline and sequence of activities.

7.2 ATTACHMENTS

Attachment 7-A – Construction Management Plan

ATTACHMENT 7-A

Construction Management Plan

8 NATURAL FEATURES

8.1 OVERVIEW

The project site is currently entirely developed and does not contain any significant natural features including wetlands, vernal pools or other protected resources or wildlife habitats.

9 STORMWATER MANAGEMENT

The following information is provided in accordance with the City of Portland Code of Ordinances Chapter 14 Land Use, Section 14-526(b)(3).

9.1 OVERVIEW

Maine Workforce Housing, LLC intends to redevelop two parcels totaling 16,553 square feet at 178 Kennebec Street in Portland. The project will result in a small decrease in impervious area. This narrative describes the stormwater runoff patterns and methods of stormwater management for the existing (pre-development) and proposed (post-development) conditions.

9.2 EXISTING CONDITIONS

The existing project site is entirely developed and relatively flat. The site contains approximately 14,842 square feet of compacted gravel surface area and is currently used for vehicle parking. The existing site features no formal stormwater management infrastructure. Runoff currently drains overland from the center of the parcel in all directions. Localized ponding occurs due to uneven grading of the gravel lot. Runoff flows to the existing stormdrain networks in Kennebec, Brattle and Parris Streets.

9.3 PROPOSED PROEJCT

The proposed project includes construction of a 7-story building with a footprint of 6,667 square feet, a 19-space parking lot, and associated sidewalks, utilities, and landscaping. Because the majority of the existing site is covered in impervious surface, the project will result in a decrease of approximately 85 square feet of impervious area, leaving a total impervious surface area of 14,757 square feet. The total proposed non-roof impervious area is 8,096 square feet.

Because impervious surface area will be reduced, the project is not required to meet the General or Flooding Standards. Redevelopment of non-roof impervious area is greater than 5,000 square feet, so the City's redevelopment standards apply to the project. The redevelopment standards require treatment of stormwater runoff from 50% of the proposed total impervious areas based on MDEP's pollutant ranking system for redevelopment projects:

Existing Impervious: Gravel Parking Lot
Area = 14,842 sf
Pollutant Ranking = 3

Proposed Impervious: Flat roof and paved parking & sidewalk
Area = 14,757 sf
Pollutant Ranking = 3 (for both cover types)

Ranked Impact Change due to the Redevelopment = 0

Percentage of Impervious Area that must be treated = 50%
Impervious Area that must be treated = 7,379 sf

9.4 TREATMENT MEASURES

Proposed treatment measures designed to meet the treatment standards include a roof drain filter unit and permeable pavers. More information for each system is provided below.

Roof Runoff Filter

Runoff from a portion of the roof will be captured in a roof drain system and directed to a storm basin filter system that utilizes cartridge filters installed within the building. The storm filter unit is manufactured by Fabco Industries, and has been used on other urban infill projects in the city where there is limited area outside the building for more typical stormwater treatment measures. A detail of the unit is provided on Sheet C-6.1, and sizing calculations are provided in Attachment 9-A.

Approximately 68% of the proposed roof area (4,520 sf) will be collected and treated in the storm basin filter prior to discharging to the existing storm drain network in Parris Street. The system was designed with the capacity to filter up to a 1-year storm event. More intense rainfall events will partially bypass the filters.

The remaining roof runoff will be untreated but captured in a separate roof drain system and discharged to the existing storm drain network in Brattle Street.

Pervious Pavers

A single row of parking, containing 12 parking spaces, located on the south side of the building will be constructed using pervious pavers. Beneath the pavers, a crushed stone reservoir course will store runoff before it is filtered through a gravel subbase material and collected in a perforated underdrain. The underdrain system will connect to an existing storm drain in Parris Street. The system will receive runoff from 2,859 square feet of parking and the adjacent sidewalk area.

An additional benefit of the pervious pavers is that some runoff is expected to infiltrate into the subgrade beneath the underdrain system, reducing the volume of runoff that will be directed to the city's storm drain network.
Runoff from the remaining parking lot and sidewalk areas not tributary to the pervious pavers will continue to flow overland towards the surrounding streets and existing storm drain networks, as it does today.

9.5 CONCLUSIONS

The design meets the treatment standards for redevelopment projects, outlined in Section 5.2.D of the City of Portland Technical Manual. The roof drain filter and pervious paver system will treat 7,379 square feet of impervious area, which equals 50% of the proposed impervious surface on the site.

The project is also expected to result in a modest decrease in runoff volume due to the reduction in impervious surface area and the infiltration that is expected to occur within the pervious pavement system.

The project is not expected to cause ponding, flooding, or erosion problems on or downstream of the site. The relatively small amount of runoff entering the city's storm drain network is not expected to overburden the system.

9.6 ATTACHMENTS

Attachment 9-A – Roof Drain Filter Design Calculations

ATTACHMENT 9-A

Roof Drain Filter Design Calculations

DOWNSPOUT FILTER SIZING CALCULATIONS

1. Calculate Peak Flow Rate During 1-year Storm

Method: Rational Formula (Q=ciA)

c= 0.95
I (in/hr)= 3.06 1-year storm, Tc=5 min.
A (sf)= 4,520

Q_1 (cfs)= 0.302

2. Calculate How Many Filter Cartridges are Necessary

Q, Flow Rate per Cartridge (cfs)= 0.25

Cartridges = Q_1 / Q = 1.2

2 Cartridges

3. Confirm Bypass Flow Rate is Adequate

Bypass Flow Rate=1.0 cfs

Calculate Peak Flow Rate During 100-year storm:

Method: Rational Formula (Q=ciA)

c= 0.95
I (in/hr)= 8.82 100-year storm, Tc=5 min.
A (sf)= 4,520

Q_{100} (cfs)= 0.869

10 CONSISTNECY WITH CITY MASTER PLANS

10.1 OVERVIEW

Our office is not aware of any applicable Master Plans created for the project site.

11 UTILITIES

11.1 OVERVIEW

The proposed project will involve installation of new utility services to the building. All new utility services will be provided from the franchise utilities available within Kennebec, Brattle and Parris Streets. The proposed locations of the new utility services are shown on the Utility Plan (Sheet C-5.0).

11.2 WATER SUPPLY

The proposed project will receive its water supply from the Portland Water District's (PWD) public water supply system. Separate fire and domestic services will be installed to the building from PWD's existing main in Kennebec Street. Terradyn Consultants submitted an ability to serve request to PWD on March 28, 2018, and will provide the ability to serve letter once received. Correspondence with utilities is included in Attachment 11-A.

11.2.1 Total Project Water Usage

The total average daily water demand for the proposed project is estimated to be 5,616 gallons per day, based on design flows published in the State of Maine Subsurface Wastewater Disposal Rules.

46 x 1 Bedroom Residential Units at 120 gpd/unit	= 5,520 gpd
4 x Retail Unit with 2 Employees at 12 gpd/employee	= 96 gpd
Total	= 5,616 gpd

11.3 WASTEWATER DISPOSAL

The proposed project will be connected to the Portland Water District's and City of Portland's wastewater collection and conveyance systems. The City of Portland Wastewater Capacity Application has been completed and will be forwarded to Brad Roland of the City's Water Resources Department.

The overall project is anticipated to generate an average daily flow of approximately 5,616 gpd. Based on the existing sewer system in the area, there appears to be adequate capacity to handle these projected flow amounts.

11.4 ELECTRICITY SUPPLY

CMP currently maintains overhead and underground utilities in the area. Electric utilities for the project will be installed underground from the relocated pole on Parris Street, to the east of the site.

11.5 ATTACHMENTS

Attachment 11-A – Correspondence with Utilities

ATTACHMENT 11-A

Correspondence with Utilities

TERRADYN
CONSULTANTS, LLC
Civil Engineering - Land Planning - Stormwater Design - Environmental Permitting

1747

March 27, 2018

MEANS
means@pwd.org
Portland Water District
225 Douglass Street
Portland, ME 04104

Request for Ability to Serve Letter
47-Unit Residential Development
178 Kennebec Street, Portland, Maine

Dear Sir or Madam:

Terradyn Consultants LLC has been retained by The Szanton Company to assist with site design and permitting for a proposed 47-unit condominium development project located at 178 Kennebec Street in Portland, Maine. We are writing to request a letter confirming the Portland Water District's ability to serve the proposed development.

The 16,553 square foot parcel is identified as Lots 1 and 2, Block F on the City of Portland Tax Map 34. The site is located along the southern side of Kennebec Street between Brattle and Parris Streets. The site is currently developed with a gravel parking area.

The proposed project includes the construction of a 6,830 square foot, 7-story building, including 47 condominium units for 55+ housing. All of the units are one-bedroom. Retail and artist space will be provided on the first floor. Public water and sewer utilities will be installed to serve the project. It is anticipated that a new 6" fire protection water service and a new 2" domestic water service will be installed for the new building. From the survey the water main in Kennebec appears to be 20", but there is also a 6" main located northwest of the site. The ideal connection for this project is from the mechanical room to utilities in Parris Street, but no water utilities were mapped here as part of our survey. Any information the district can provide on utilities in Parris Street, or which water main we should connect to, is helpful.

Attached are a site location figure showing the property delineated on a USGS map and a preliminary site utility plan of the project, showing how the development may be served with water. A spreadsheet showing the total number of proposed plumbing fixtures is provided in a separate document.

Please provide our office with confirmation that the Portland Water District has the ability to serve the proposed development. As the design is refined, we will provide more detailed drawings of the project for your review.

If you have any questions or need more information to make your determination on ability to serve, please contact me at (207) 322-1223 or adrienne@terradynconsultants.com.

Sincerely,

TERRADYN CONSULTANTS LLC

Adrienne Fine, P.E.
Design Engineer

Enc.

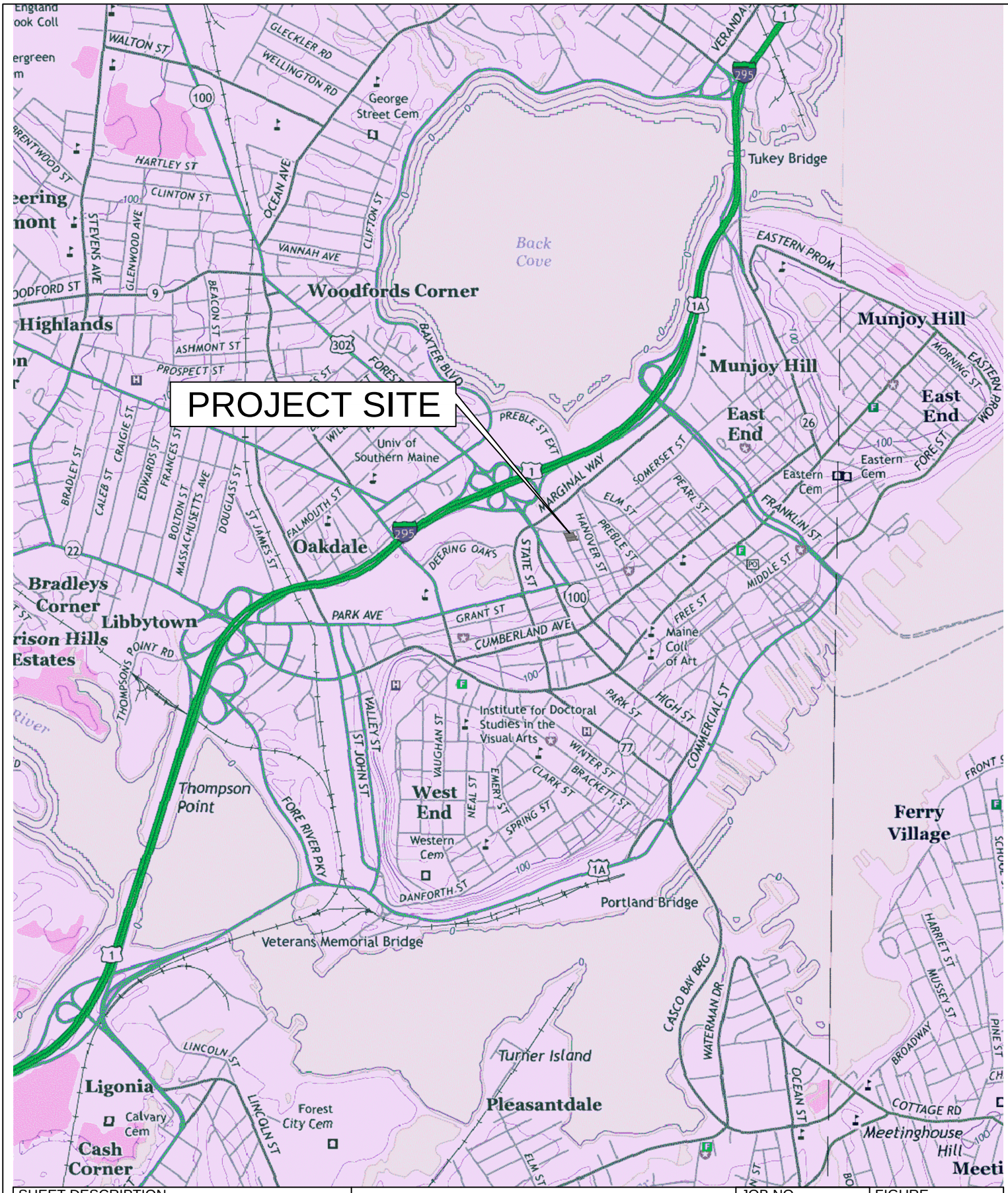

SHEET DESCRIPTION		JOB NO.	FIGURE
178 KENNEBEC STREET U.S.G.S. QUADRANGLE MAP PORTLAND WEST	TERRADYN CONSULTANTS, LLC P.O. Box 339 111 Elderberry Lane New Gloucester, ME 04260 Office: (207) 926-5111 Fax: (207) 221-1317 www.terradynconsultants.com	1747	1
PREPARED FOR		DATE	OF
THE SZANTON COMPANY 482 CONGRESS STREET, SUITE 203 PORTLAND, MAINE 04101	Civil Engineering - Land Planning - Stormwater Design - Environmental Permitting	3/27/2018	2
		SCALE	
		1"=2,000'	

SHEET DESCRIPTION 178 KENNEBEC STREET AERIAL PHOTOGRAPH (2017)	TERRADYN CONSULTANTS, LLC P.O. Box 339 111 Elderberry Lane New Gloucester, ME 04260 Office: (207) 926-5111 Fax: (207) 221-1317 www.terradynconsultants.com	JOB NO. 1747	FIGURE 2
PREPARED FOR THE SZANTON COMPANY 482 CONGRESS STREET, SUITE 203 PORTLAND, MAINE 04101	Civil Engineering - Land Planning - Stormwater Design - Environmental Permitting	DATE 3/27/2018	OF 2
		SCALE 1"=60'	

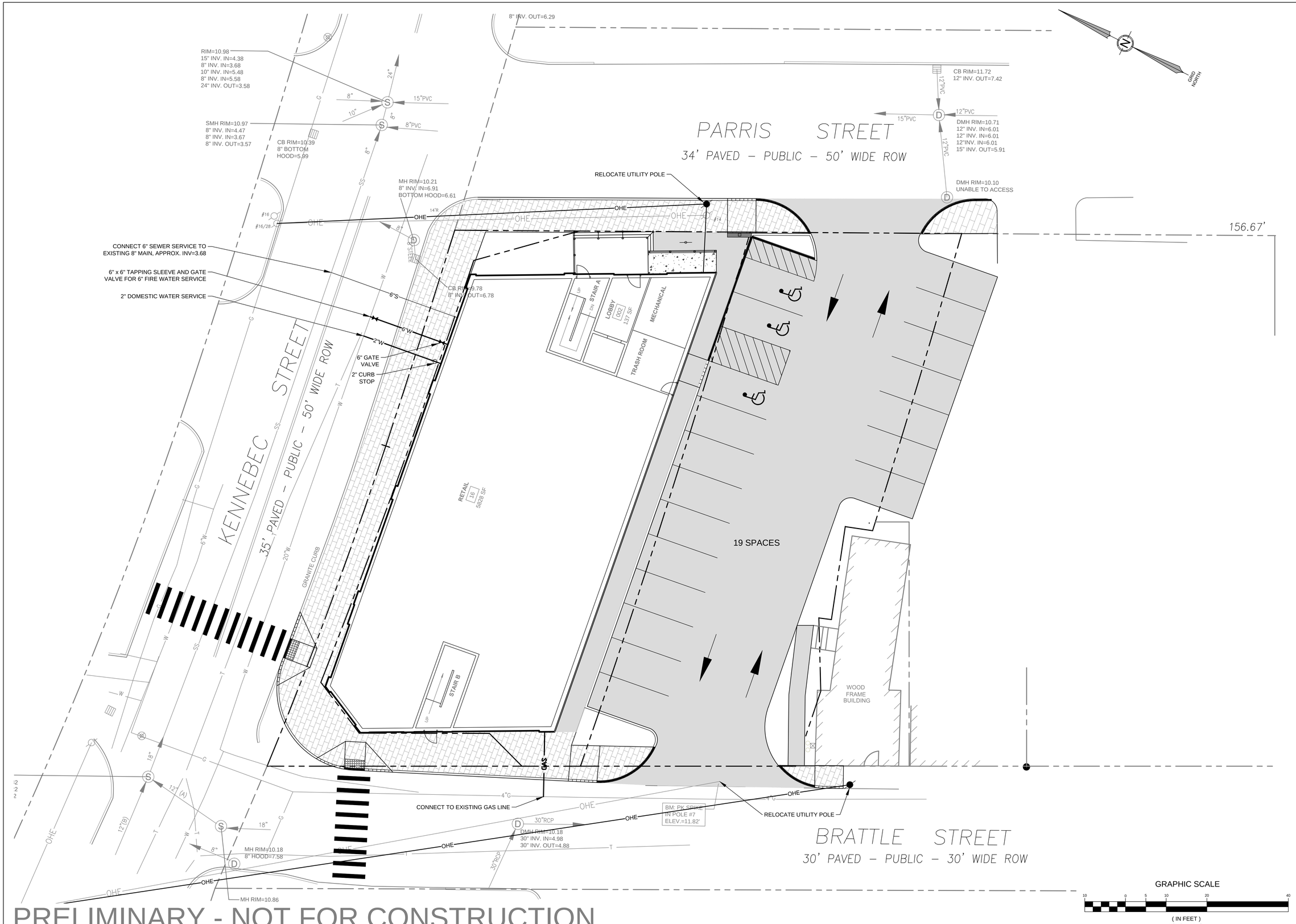

PRELIMINARY - NOT FOR CONSTRUCTION

DATE:			
			APP'D BY
		SUBMITTED TO PLANNING BOARD FOR APPROVAL	REVISIONS
1	3-28-2018		
NO.	DATE		

TERRADYN CONSULTANTS, LLC
P.O. BOX 339
111 CONSERVATORY LANE
NEW GLOUCESTER, ME 04260
565 CONGRESS STREET
SUITE 310
PORTLAND, ME 04102
OFFICE: (207) 926-5111 FAX: (207) 221-1317
www.terradynconsultants.com
Civil Engineering - Land Planning - Stormwater Design - Environmental Permitting

SHEET DESCRIPTION
178 KENNEBEC STREET
178 KENNEBEC STREET
PORTLAND, ME 04101
UTILITY PLAN

PREPARED FOR
THE SZANTON COMPANY
482 CONGRESS STREET, SUITE 203
PORTLAND, ME 04101

DATE:	3/16/2018
SCALE:	1" = 10'
DESIGNED:	ARF
JOB NO:	1747
FILE:	1747-B.DWG
SHEET	C-5.0

12 SOLID WASTE

12.1 OVERVIEW

The project will generate solid waste both during construction and on an on-going basis after construction is complete. Estimates of solid waste generation, recycling rates, and procedures for the transport and disposal of solid waste that will be generated by the operation of the proposed development are provided below.

The following amount of solid waste associated with the construction and operation of the development have been estimated:

- 62.2 cubic yards of construction debris related to the new building construction activities (excluding volume of recycled materials).

- 1,564 pounds per week of solid waste will be generated by the operation of the development. Assuming that 50% of the waste is recycled, it is estimated that the project will generate 20.4 tons of recyclable waste and 20.4 tons of non-recyclable waste per year.

12.2 SOLID WASTE GENERATED DURING THE BUILDING CONSTRUCTION

Approximately 311 cubic yards of construction debris is expected to be generated during construction. Assuming that 80% of construction debris is recycled, construction of the project will generate approximately 62.2 c.y. of non-recyclable waste.

The waste stream will be transported and disposed of at the following locations:

Hazardous Materials:	WMI Crossroads Facility in Norridgewock, Maine
Mixed Construction Material:	Riverside Recycling Facility in Portland, Maine; WMI Crossroads Facility in Norridgewock, Maine or Juniper Ridge in Old Town, Maine (Contractor option)
Separated Wood Construction Debris:	KTI Biofuels in Lewiston, Maine
Separated Metal/Ferrous Material:	One Steel Recycling Inc. in Arundel or Oakland, Maine

The collection, transfer, disposal, and payment of all fees for solid wastes shall be the responsibility of the Contractor, with all waste transferred by a licensed non-hazardous waste transporter.

12.3 SOLID WASTE GENERATED FROM THE OPERATION OF THE DEVELOPMENT

Approximately 1,564 pounds of solid waste and recyclable material is expected to be generated every week by the residents of the project. The operational solid waste and recyclable material will be collected by a private trash collector selected through a bidding process.

12.4 ATTACHMENTS

Attachment 12-A – Computations of Types and Volumes of Solid Wastes for Construction Project

ATTACHMENT 12-A

Computations of Types of Volumes of Solid Wastes

ATTACHMENT 12-A

SOLID WASTES COMPUTATIONS AND DISPOSAL

A. NEW BUILDING CONSTRUCTION:

Basis of Estimate: 10 c.y./1,500 s.f. of finished space

Area: Approximately 46,669 square feet of finished space

Solid Waste: Approximately 311 c.y.

Other Wastes Associated with Other Site Construction: Cardboard from packaging etc.: Limited Quantity

Total: 311 c.y. before recycling

Net: 62.2 c.y. if 80% of the material is recycled

Disposition:
Assume 10 percent is concrete which can be sent to the approved aggregate recycling facilities operated by Shaw Bros. or R.J. Grondin and Sons for processing into recycled aggregate.

Assume 70 percent is wood or metal which can be transported to KTI Biofuels in Lewiston (for wood) or One Steel Recycling in Oakland, Maine for metals.

Approximately 62 cubic yards of mixed construction debris that will be hauled to the Riverside Recycling Facility in Portland, WMI Crossroads facility in Norridgewock, Maine or the Juniper Ridge Facility in Old Town, Maine.

The contractor should provide dumpsters designated by material type and identify recycling methods and disposal sites prior to construction. All haulers must have a current non-hazardous waste haul license.

B. OPERATIONAL SOLID WASTE:

RESIDENTIAL USE:

Basis of Estimate: 17 pounds/wk per individual. Estimate of 2 individuals per residential unit. From Table 14-1 of the CEQR Technical Manual from January 2014 Edition; Source: New York City Department of Sanitation.

Number of individuals: 92

Solid Waste: Approximately 1,564 pounds/week

13 FIRE SAFETY

13.1 OVERVIEW

The applicant and project team will provide the Portland Fire Department with the information required in the PFD Site Review Checklist, as well as a basic review of NFPA 1 and City of Portland Technical Standards related to public safety.

The project site will be accessed from Kennebec, Brattle and Parris Streets. The applicant is requesting that the address for the residential lobby accessed from Parris Street be 100 Parris Street, and the address for the artist/retail spaces accessed from Kennebec Street be 178 Kennebec Street. Kennebec Street is improved with a 35’ wide paved surface, Brattle Street is improved with a 30’ wide paved surface, and Parris Street is improved with a 34’ wide paved surface. The project can also be accessed from the proposed parking lot south of the building that will be accessed from Brattle and Parris Streets. A 20” and 6” water main owned by the Portland Water District currently exists in Kennebec Street, and the closest fire hydrant is located on the northern side of Kennebec Street directly across from the site.

All four sides of the proposed building will be fully accessible from the surrounding streets and proposed parking lot. The proposed building will be fully sprinkled in compliance with all applicable codes.

14 CONFORMITY WITH APPLICABLE DESIGN STANDARDS

14.1 OVERVIEW

This project conforms to all applicable Site Plan Standards of Section 14-526 of the city's Land Use Ordinance as described in the following narrative.

(a) Transportation Standards

1. Impact on Surrounding Street Systems:

   The project will not have a significant impact on the surrounding street system. Vehicles will access the site and parking areas from existing access points and the estimated number of new vehicle trips generated by the project is insignificant compared to existing trips on surrounding streets.

2. Access and Circulation:

   a. Site Access and Circulation

      (i) Pedestrian access to the site will be provided via the proposed brick sidewalks along the Kennebec, Brattle and Parris Street frontages. There will also be an on-site concrete sidewalk along the southern side of the building between the building and the proposed parking lot. Door controlled access will be provided at each of the building entry locations.

      (ii) The project will use existing points of access.

      (iii) Drive up features are not proposed

      (iv) Site access has been designed so as not to impede potential future connection to adjacent streets.

   b. Loading and Servicing

      (i) Delivery or service vehicles are expected to be infrequent and may temporarily use spaces in the proposed parking lot.

   c. Sidewalks.

      (i) Brick sidewalks will be constructed along the site's Kennebec, Brattle and Parris Street frontages. All sidewalk improvements shall conform to the City of Portland Technical Manual as shown on the project drawings.

      (ii) The short section of sidewalk along Kennebec Street at the corner of Brattle and Kennebec Streets will be re-constructed as part of this project, and the sidewalk ramp will be constructed in accordance with City of Portland

Technical Design Standards. The apparent flush bituminous sidewalk along Brattle Street will be re-constructed with a brick sidewalk that conforms to the City of Portland Technical Design Standards.

(iii) The proposed on-site sidewalk will connect from the proposed sidewalk along Brattle Street to the proposed sidewalk along Parris Street and provide access to the southern side of the building and the parking lot. The primary building entrance for the residences is from the Parris Street sidewalk, and the primary building entrance for the first floor artist space is from Kennebec Street. Additional building entrances will exit onto the Brattle Street sidewalk and the on-site sidewalk along the southern side of the building.

3. Public Transit Access:

Metro Bus Route 2 runs north and south on Forest Avenue in the proximity of the project site. The nearest bus stop to the project is along Forest Avenue at the post office, approximately 1,000' southwest of the site. The project does not meet the minimum threshold to require a new transit facility.

4. Parking:

a. Location and Required Number of Vehicle Parking Spaces:

(i) The proposed project is an affordable housing projected located in the B7 zone with less than 50,000 sf of floor area, therefore the planning board shall establish the parking requirement for the structure. The proposed number of units is 46, and at least 28 of the units will be affordable housing. The artist space on the first floor is approximately 5,429 sf, which requires 6 parking spaces (1 space/1,000sf). The proposed parking lot is located south of the building and is accessed from Brattle and Parris Streets. The parking lot will include 19 parking spaces, 3 of which are ADA accessible and one of which is a dedicated drop off/pick up space. It is expected that many residents will utilize drop off/pick up services for transportation so including this space further reduces the requirement for parking spaces. This amount of parking is sufficient for the project because it is a 55+ affordable housing development where a small percentage of the residents are expected to own vehicles. At least 11 of the units will be ADA units, which will further decrease the number of residents who own vehicles. A ramp is proposed from the parking lot at the ADA spaces to the building lobby entrance.

(ii) A parking study is not required for this project.

(iii) Not Applicable

(iv) The dimensions of the parking spaces meet dimensional standards as detailed in the City of Portland Technical Manual. The three ADA spaces comply with ADA requirements.

(v) The proposed parking lot will be constructed of bituminous pavement, and one row will be pervious pavers for stormwater management purposes.

b. Location and Required Number of Bicycle Parking Spaces:

(i) The project requires 2 bicycle parking spaces for every 5 dwelling units, or 18 spaces. Bicycle parking spaces will be provided at bicycle racks throughout the project site frontage along Kennebec, Brattle and Parris Streets.

c. Motorcycles and Scooter Parking:

(i) Dedicated motorcycle/scooter parking is not provided.

d. Snow Storage:

(i) Snow storage will be provided on lawn areas adjacent to the proposed parking lot, and south of the proposed parking lot on land owned by Ross Furman that is gravel today.

(ii) Snow will not be stored in parking areas, and no bio-retention is proposed.

5. Transportation Demand Management (TDM):

a. A TDM plan is not required for this project.

(b) Environmental Quality Standards

1. Preservation of Significant Natural Features:

a. The development site has been entirely developed and does not contain any significant natural features including wetlands, vernal pools or other protected resources or wildlife habitats.

b. Not applicable

c. Not applicable

2. Landscaping and Landscaping Preservation:

a. Landscape Preservation.

(i) There are no existing trees on site, and the site is nearly entirely developed with impervious surface.

(ii) Not applicable.

(iii) Not applicable.

(iv) Waiver: Not applicable.

(v) The project is not in the Shoreland Zone

b. Site Landscaping.

(i) Landscaped Buffers:

(a) Not applicable.

(b) Plantings are proposed in a side yard setback area along Parris Street, as specified on the Landscape Plan.

(c) Not applicable.

(d) Not applicable.

(ii) Parking Lot Landscaping:

(a) Landscaping is proposed within the parking lot islands, as specified on the Landscape Plan. Trees are proposed in both islands.

(b) Not applicable.

(c) Not applicable.

(d) Not applicable.

(e) Not applicable.

(iii) Street Trees

(a) There are no existing street trees along the site's frontages. The proposed project includes three street trees along Kennebec Street, one along Brattle Street, and two within the side-yard setback area adjacent to the building lobby entrance along Parris Street. Additionally, two trees are proposed in parking lot landscape islands adjacent to and visible from

the public right of way. The Landscape Plan provides a total of 8 trees within or visible from the public right of way.

(b) There is no space for additional street trees along the project site's frontage. Additional plantings surround the street trees and on-site trees to provide additional green space on- site. These plantings are specified on the Landscape Plan.

3. Water Quality, Stormwater Management and Erosion Control:

a. Stormwater:
The existing project site contains approximately 14,842 square feet of impervious surface. Redevelopment of the project site will result in a decrease of approximately 85 square feet of impervious area and a total impervious surface of 14,757 square feet. Therefore, the project is not required to meet the General or Flooding Standards.

Redevelopment of non-roof impervious area is approximately 8,096 square feet, which is greater than 5,000 square feet, so the project is required to meet the City's redevelopment standards and treat 50% of stormwater runoff from the total proposed impervious areas.

The proposed treatment plan includes capturing runoff from 68% of the roof area (4,520 sf) and treating it in a storm basin filter system that utilizes cartridge filters in a tank within the building. Runoff will be captured in a roof drain system and will filter through the cartridges prior to discharging to the existing storm drain network in Parris Street. The remaining roof runoff will be untreated but captured in a separate roof drain system and discharged to the existing storm drain network in Brattle Street. The treatment plan also includes treating runoff from 2,859 sf of parking and sidewalk surfaces in an underdrained pervious paver system. The row of parking closest to the building will be constructed with pervious pavers that will capture and filter the stormwater before collecting it in an underdrain and discharging the runoff to the existing storm drain network in Parris Street. The runoff from the remaining parking lot and sidewalk areas not tributary to the pervious pavers will continue to flow overland towards the surrounding streets and existing storm drain networks as it does today.

(i) The project will not result in flooding of adjacent lots.

(ii) Runoff volumes and rates will not increase onto adjacent lots.

(iii) Volumes and rates of stormwater runoff into the Kennebec, Brattle, and Parris Street rights of way are expected to decrease. The project will not

create ponding, flooding, or other drainage problems within the surrounding streets.

(iv) Volumes and rates of stormwater runoff into the city's storm drain network are expected to be similar to existing volumes and rates. The project will not create problems downstream or exceed the capacity of the system.

b. The project will result in a decrease in impervious surface and is not required to meet the General or Flooding Standards. The project is required to meet the Redevelopment standards, as described above.

c. Not Applicable. The project is not located in a watershed of an urban impaired stream.

d. Not applicable.

e. The project will be served by both a public wastewater system and public drainage system. The project will not pose a risk of groundwater contamination.

f. Wastewater will flow to the public sewer system, which is adequately sized for the project flows.

(c) Public Infrastructure and Community Safety Standards.

1. Consistency with City Master Plans:

a. The project has been designed to be consistent with the City of Portland Land Use Ordinance and off-premises infrastructure.

b. Not applicable.

2. Public Safety and Fire Prevention:

a. The site has been designed to promote safety and security for residents and their guests. Access to the residential lobby will utilize keyed entry. Site lighting will provide added security.

b. Emergency vehicle access will be via Kennebec, Brattle and Parris Streets.

c. An existing fire hydrant is located on the north side of Kennebec Street directly across from the site. The proposed building will also feature sprinklers for fire suppression.

3. Availability and Adequate Capacity of Public Utilities:

a. The project will be served by new water and sewer utilities. An ability to serve request was sent to the Portland Water District on 3/28/18, and a Wastewater Capacity Application has been completed and will be forwarded to Brad Roland at the City of Portland.

b. Overhead electrical and telecommunications utilities exist along Kennebec, Brattle, and Parris Streets. The project site will be served by underground utilities from a relocated pole along the Parris Street frontage, east of the site. The pole will have pole mounted transformers.

c. All new utility infrastructure will meet the provisions of the Technical Manual.

d. The project will be connected to the public sewer system within Kennebec Street.

e. The sanitary sewer and stormwater collection systems were designed to comply with City standards.

f. A solid waste storage areas will be provided adjacent to the residential lobby in the first floor of the building. A private trash collection company will be selected for trash hauling from the site.

(d) Site Design Standards

1. Massing, Ventilation and Wind Impact:

a. The bulk, location and height of the proposed building will not result in adverse impacts to abutting properties.

b. The bulk, location and height of the proposed building will not substantially reduce the value or utility of adjacent structures.

c. HVAC systems will be located on the roof of the building, and will not be visible from the street. Venting is proposed to be directed away from public spaces and adjacent residential sites.

2. Shadows:

a. The project is not expected to cause shadows on publically available open space, or have an adverse effect on vegetation as a result of shadows cast from the proposed building.

3. Snow and Ice Loading:

a. The proposed building will have a flat roof. Accumulated snow and ice will not fall onto adjacent properties or public ways.

4. View Corridors:
   a. The project site is located outside of any protected view corridors.

5. Historic Resources:

   a. The development is not within a designated historic district and does not affect designated landmarks.

   b. Not Applicable

   c. There are no known archaeological resources on the site.

6. Exterior Lighting:

   a. Site Lighting

      (i) Exterior site lighting will be provided by building mounted lights along sidewalks and in parking areas. All fixtures will feature full cut-off optics to prevent unintended light pollution. Proposed lighting is shown on the Lighting Photometric Plan (Sheet P-1).

   b. Architectural and Specialty Lighting:

      (i) No architectural or specialty lighting is proposed.

      (ii) No up-lighting is proposed.

   c. Street Lighting

      (i) Two street lights are proposed along Kennebec Street that meet the new requirements of the City of Portland Technical Manual.

7. Noise and Vibration:

   Noise levels are expected to meet the permitted levels for the R6 Zone.

   b. HVAC and Mechanical Equipment
      (i) HVAC equipment will be located on the roof and will meet all applicable state and federal emissions requirements. The units will not be visible from the surrounding streets or adjacent sites.

      (ii) An emergency generator will be provided for this project and will be operated in accordance with the City of Portland Code of Ordinances Section 14-526.

8. Signage and Wayfinding:

a. All signage shall meet the requirements of the Manual on Uniform Traffic Devices (MUTCD) and Division 22 of the City Code.

(i) The project is not subject to a Certificate of Appropriateness.

(ii) Not applicable. No commercial or directional traffic signage is proposed as part of the project.

(iii) On site stop signs will be provided at driveway locations.

(iv) Not applicable. No waiver is required.

9. Zoning Related Design Standards:

a. The project is designed to meet the Design Principles and STandards for the B-7 Mixed Use Urban District Zone as specified in the City of Portland Design Manual.

15 VERIFICATION OF PROPOSED HVAC EQUIPMENT

15.1 OVERVIEW

The following manufacturer cut sheets verify that all proposed HVAC and manufacturing equipment meets applicable state and federal emissions requirements.

15.2 ATTACHMENTS

Attachment 15-A – HVAC Equipment Cut Sheets

ATTACHMENT 15-A

HVAC Equipment Cut Sheets

RV-25

CONSTRUCTION FEATURES AND ACCESSORIES

Unit Overview

Model	Supply (CFM)	Outside Air (CFM)	Recirc (CFM)	Exhaust (CFM)	Heating	Cooling	Electrical V/C/P
RV-25-7.5	1,800	1,800	0	0	Indirect Gas	Packaged DX	208/60/3

Features

- Exterior housing constructed of galvanized steel
- Direct-drive backward inclined plenum blowers with factory mounted VFDs
- Ball bearing motors
- Corrosion resistant fasteners
- Internally lined with galvanized steel metal creating a double wall
- Insulated with 2 in. 2.4# R13 density foam insulation
- Internally mounted control center with motor starters, 24 VAC control transformer(s), control circuit fusing
- Stainless steel condensate drain pan and connection.
- Low Sound Condenser Fan Package

Options and Accessories

- UL\cUL1995
- Weatherhood: Downturned Hood
- Supply Filters - 2" Pleated MERV 8, 4-20x20x2
- Roof Curbs - GKD-47.19/94.01-G14"
- Outdoor Air Dampers - Motorized Low Leakage
- Damper End Switch - Outdoor Air Damper
- Painted Exterior - Permatector Concrete Gray (RAL 7023)
- Microprocessor Controls
- Supply Fan Controls - Constant Volume (on/off)
- Room Sensing - Temperature
- Network Protocol: BACNetIP
- Phase and Brown Out Protection
- Unit Disconnect - Mounted By Factory
- Spare Filter Final, Quantity Set of 2
- Furnace Controls: 4:1 Modulating

Note: Unit is provided with factory mounted and wired disconnect switch.

Note: Verify that the correct Protocol has been selected before ordering.

GREENHECK
Building Value in Air.

PERFORMANCE AND SPECIFICATIONS

Description/Arrangement

Model	Qty	Unit Weight (lb)	Outdoor Air Discharge	Outdoor Air Intake	Exhaust Air Discharge	Return Air Intake
RV-25-7.5	1	2,223	Bottom	End	N/A	N/A

Design Conditions

Elevation (ft)	Summer DB (F)	Summer WB (F)	Winter DB (F)
62	88	74	-10

Air Performance

Type	Volume (CFM)	External SP (in. wg)	Total SP (in. wg)	RPM	Operating Power (hp)	Motor Qty/Size (hp)	Size (in.)/ Type
Supply	1,800	0.5	0.775	1632	0.42	Qty 1 (1)	14/Plenum

Electrical/Motor Specifications

V/C/P	Unit MCA (amps)	Unit MOP (amps)	Enclosure	Supply Motor RPM	Supply Efficiency	Exhaust Motor RPM	Exhaust Efficiency
208/60/3	39.6	60	ODP	1750	PE	N/A	N/A

Heating/Cooling Specifications

Heating Type	Gas Type	Input (MBH)	Output (MBH)	LAT (F)	Temp. Rise (F)	Furnace Size	Furnace Control
Indirect Gas	Natural	200.0	160.0	72.3	82.3	200	4:1 Modulating

Cooling Type	Total Capacity (MBH)	Sensible Capacity (MBH)	Compressor Quantity	Lead Compressor Type	Condensing Unit By
Packaged DX	96.2	53.0	1	Digital Scroll	Greenheck

Sound Performance in Accordance with AMCA

Fan	Sound Power by Octave Band								Lwa	dBA	Sones
	62.5	125	250	500	1000	2000	4000	8000			
Supply	67	69	81	73	70	66	63	59	76	65	13.0

Unit Pressure Drop (in. wg)

Air Stream	Weatherhood	Damper Section	Filter Section	Cooling Section	Heating Section
Supply	0.035	0.014	0.051	0.046	0.118
Exhaust	0	0	0	N/A	N/A

Note: The unit base line performance incorporates the pressure drop of the energy wheel.

Note: Filter pressure drop is based off of clean filters.

RADIATED SOUND

Position A

Position D

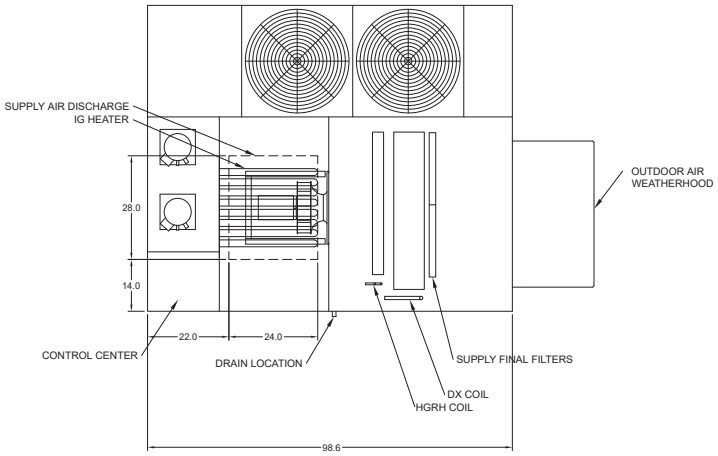

Position B

Plan

Position C

Position E = Top of Unit

RV-25: Supply Air Flow Nominal, Largest Tonnage Condensing Section Available, PDX units only

Free Field Plane	Octave Band (Sound Power Lw)								Lw	LwA
	1	2	3	4	5	6	7	8		
A	73	85	78	80	81	73	67	62	88	83
B	71	79	69	78	73	68	64	57	83	78
C	79	77	69	76	75	70	60	59	83	78
D	74	77	72	74	74	67	61	58	82	77
E	77	84	78	79	77	72	65	61	87	81
Total	83	89	82	85	84	78	71	67	93	87

AMCA 320-07 - Laboratory Methods of Sound Testing of Fans Using Sound Intensity
Tests conducted in accordance with this standard.
Free field measurement plane created 1 foot from unit on all sides and top.
Sound Intensity measured in Watts/m^2.
Sound data converted to Sound Power (Lw) for the chart above.
A-Weighted Sound Power was determined using AMCA Standard 301-90 Clause 9.1.

GREENHECK
Building Value in Air.

COOLING PERFORMANCE

Packaged DX Cooling

Nominal Tonnage	Total Capacity (MBH)	Sensible Capacity (MBH)	Refrigerant Type	Lead Compressor Type	Compressor Quantity	Condensing Unit
7.5	96.2	53.0	R-410A	Digital Scroll	1	By Greenheck

Hot Gas Reheat

Type	Capacity (MBH)	LAT (F)
Modulating	54.4	89.3

Condensing Unit Details

The RV will come equipped with the following components:

- Hermetic scroll type compressors
- Compressors mounted in a compartment to be serviceable without affecting airflow and on neoprene vibration isolation to minimize vibration transmission and noise
- Crankcase heater on compressor
- Thermal expansion valve for refrigerant flow control
- Variable capacity scroll compressor
- Multiple condensing fans to allow fan cycling for head pressure control
- Liquid-Line filter drier
- High pressure manual reset cutout
- Low-pressure auto-reset cutout
- Time delay relays for compressor protection
- Service/charging valves
- Moisture-indicating sight glass
- Direct drive condensing fans with external rotors and molded fan blades
- Condensing coils with 5/16" copper tubes mechanically bonded to aluminum fins

Packaged DX Coil Details

Face Area (ft2):	11.8
Rows Deep (Evap Coil):	2
Fins Per Inch:	10
Face Velocity (ft/min):	152
Entering Dry Bulb (F):	88.0
Entering Wet Bulb (F):	73.9
Leaving Dry Bulb (F):	61.3
Leaving Wet Bulb (F):	58.7
Cool Coil SP (in. wg):	0.046
Refrigerant Velocity (ft/min):	1,602
Suction Temp. (F):	44.0
Refrigerant:	R-410A
Evaporator Cap. (MBH):	96.2
AHRI 340/360 EER:	12.3
AHRI 340/360 IEER:	12.7
AHRI 920 ISMRE:	6.9
Application EER:	15
Ambient Condenser Temp. (F):	88.0

Compressor and Condenser Details

Compressor 1 RLA (amps):	24
Compressor 1 LRA (amps):	187
Compressor 2 RLA (amps):	25
Compressor 2 LRA (amps):	164
Condenser Fan QTY:	2
Condenser Motor 1 HP:	0.62
Condenser Motor 2 HP:	0.62
Condenser Motor 1 FLA:	1.9
Condenser Motor 2 FLA:	1.9

Note: Digital Scroll is on lead circuit only.

GREENHECK
Building Value in Air.

HEATING PERFORMANCE

Indirect Gas Heating

Heating Type	Gas Type	Input (MBH)	Output (MBH)	LAT (F)	Temp. Rise (F)	Furnace Control
Indirect Gas	Natural	200.0	160.0	72.3	82.3	4:1 Modulating

Indirect Gas Unit Details

The RV will come equipped with the following:

- Power venting
- ETL listed to ANSI standard Z83.8 and CSA 2.6
- High Thermal efficiency
- Direct spark ignition
- Tubular heat exchanger
- 409 Stainless Steel heat exchange tubes
- 3/4" Gas Connection
- At least 6 in. wg of natural gas pressure (14 in. wg for LP) is required at the units gas connection in order to achieve maximum performance

ISOMETRIC DRAWINGS

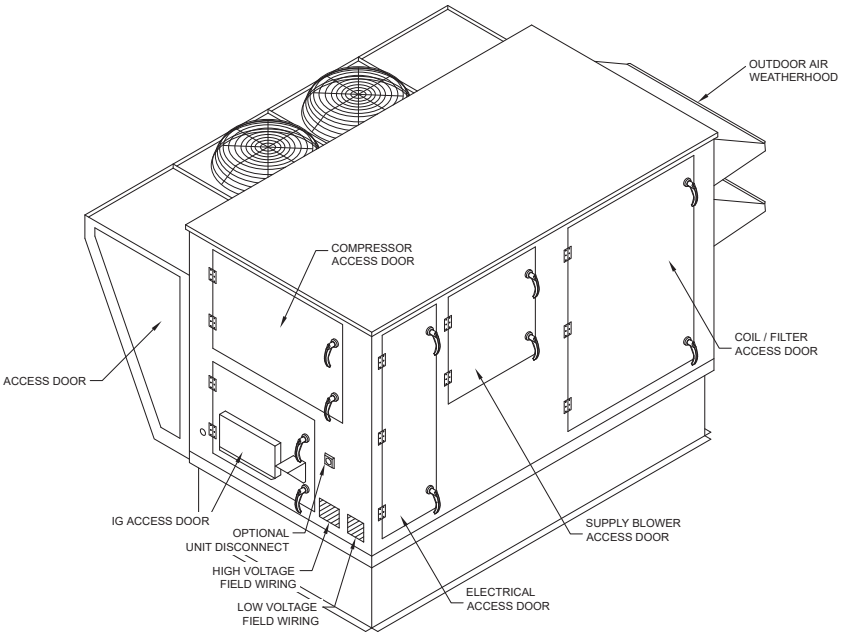

Back Right Isometric

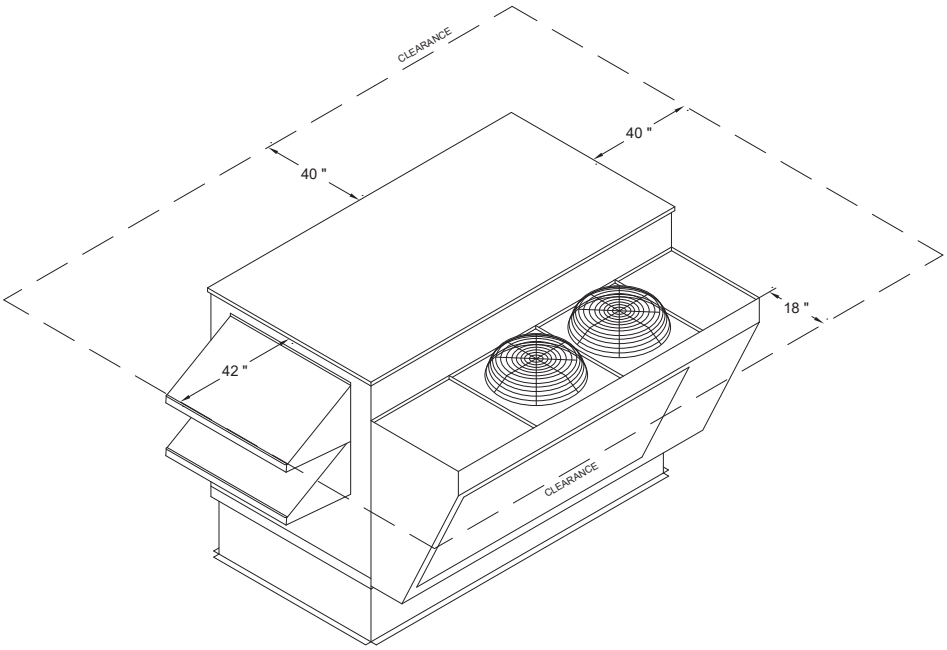

Front Left Isometric

GREENHECK
Building Value in Air.

OVERVIEW DRAWINGS

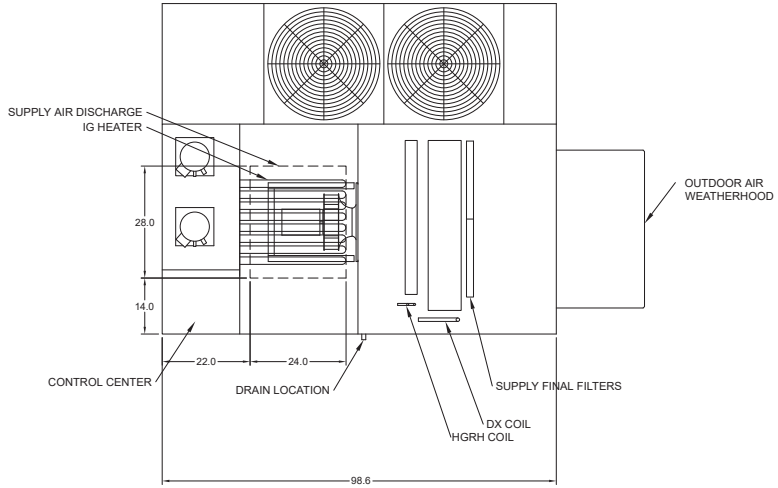

Plan

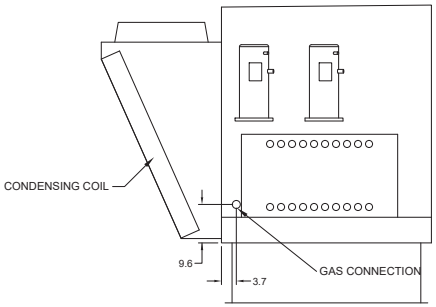

Left End

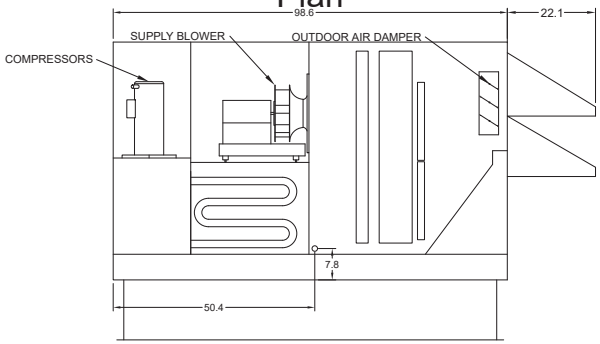

Elevation

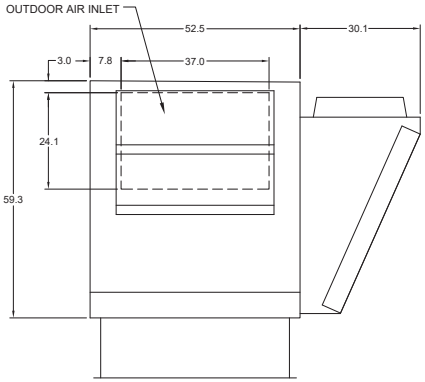

Right End

GREENHECK
Building Value in Air.

FOOTPRINT DRAWINGS

Top View of Curb

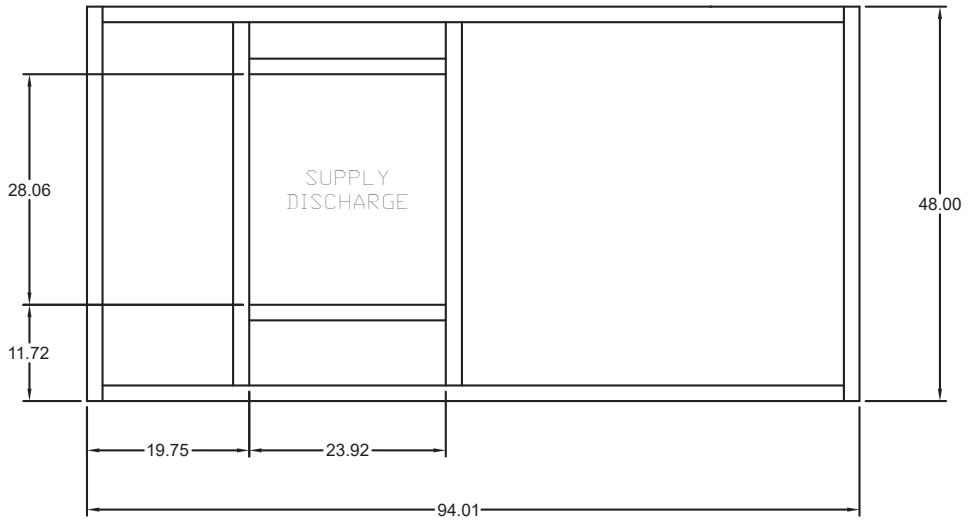

Cross-Section View of Unit on Curb

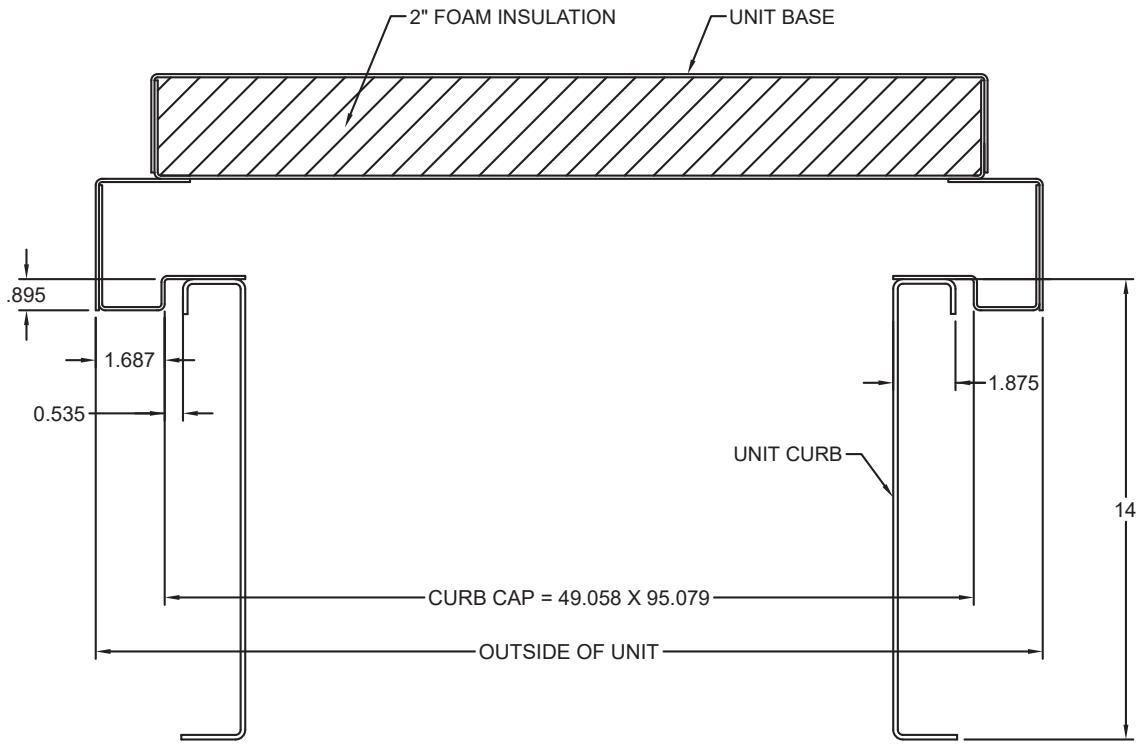

NOTES: All dimensions shown are in units of in.'s
If unit is selected with side or end discharge/return, there will not be bottom connections supplied with the curb.

Curb Weight: 159 lb

Corner Weights

683 lb 711 lb

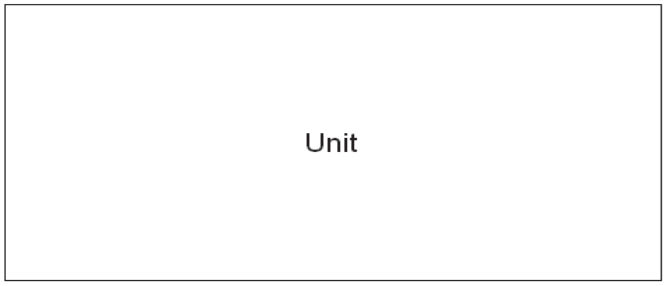

406 lb 422 lb

Note: Estimated corner weights are shown looking down on unit and the outside air intake will be on the right. Weights are applied at the base of the unit. Images not drawn to scale.

GREENHECK
Building Value in Air.

WIRING DIAGRAM

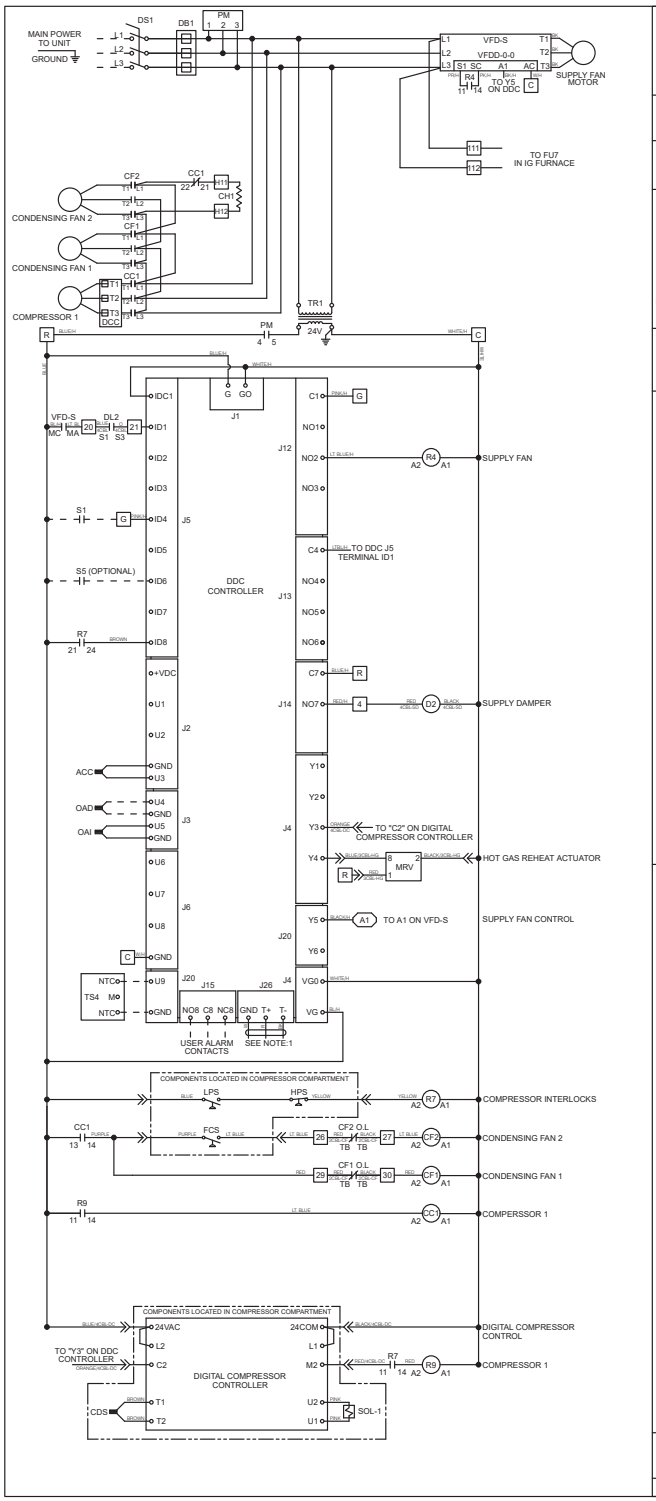

GREENHECK
Building Value in Air.

Wiring Diagram Code:

G30FX5000RGMGKEF13

CAUTION

UNIT SHALL BE GROUNDED IN ACCORDANCE WITH N.E.C.
POWER MUST BE OFF WHILE SERVICING.

NOTES

USE COPPER CONDUCTORS ONLY
60° C FOR TERMINALS RATED LESS THAN 100 AMPS.
75° C FOR TERMINALS RATED 100 AMPS OR MORE.

FIELD CONTROL WIRING RESISTANCE SHOULD NOT EXCEED 0.75 OHM.

FIELD WIRED — — — —
FACTORY SUPPLIED AND WIRED ————

NOTE:1
IG, EXPANSION BOARD AND TSTAT MODBUS COMMUNCATION WIRING. DAISY CHAIN ALL DEVICES TOGETHER.

WIRE COLOR CODE

BK	BLACK	BL	BLUE	BR	BROWN
GY	GRAY	LT BL	LIGHT BLUE	O	ORANGE
PK	PINK	PR	PURPLE	R	RED
W	WHITE	Y	YELLOW		

LEGEND

ACC	AFTER COOLING COIL TEMP
CC	COMPRESSOR CONTACTOR
CDS	COMPRESSOR DISCHARGE SENSOR
CF	CONDENSING FAN CONTACTOR
CH	COMPRESSOR SUMP HEATER
D#	DAMPER
DB#	POWER DISTRIBUTION BLOCK
DCC	DIGITAL COMPRESSOR CONTROLLER
DS	DISCONNECT SWITCH
FCS	CONDENSER FAN CYCLE SWITCH
FU#	FUSES
HPS	HIGH PRESSURE SWITCH (MANUAL RESET)
LPS	LOW PRESSURE SWITCH
MRV	MODULATING HOT GAS REHEAT ACTUATOR
OAD	OUTDOOR AIR DISHCHARGE TEMP
OAI	OUTDOOR AIR INLET TEMP
PM	PHASE MONITOR
R4	SUPPLY BLOWER VFD RELAY
R7	COMPRESSOR INTERLOCK RELAY
R9	COMPRESSOR 1 RELAY
R10	COMPRESSOR 2 RELAY
RH	POST HEAT RELAY
SOL	DIGITAL UNLOADER SOLENOID
S1	FAN SWITCH
TR#	TRANSFORMER
TS4	ROOM TEMP SENSOR
VFD	VARIABLE FREQUENCY DRIVE

POINTS LIST

TYPE	ADDRESS	NAME
Analog	1	Outside_Air_Temp
Analog	2	Supply_Air_Temp
Analog	3	Cold_Coil_Leaving_Temp
Analog	4	Room_Air_Temp
Analog	11	Temp_Set_Point
Analog	12	Active_Temp_Set_Point
Integer	1001	Unit_Status_Index
Integer	1002	Healing_Control_Loop
Integer	1003	Cooling_Control_Loop
Integer	1005	Reheat_Control_Loop
Integer	1008	Supply_VFD_Speed
Integer	1009	Supply_VFD_SetPt
Integer	1012	OA_Damper_Position
Integer	1013	OA_Damper_SetPt
Integer	1018	Occupied_Unoccupied
Integer	1019	IG_Alarm
Digital	1	On_Off_Stat
Digital	2	Supply_Fan_Status
Digital	4	Occupancy_Status
Digital	8	Digital_Scroll_Status
Digital	10	Unit_Start_Stop
Digital	11	Reset_Alarms
Digital	20	Global_Alarm
Digital	21	Supply_air_proving
Digital	26	Compressor_trip
Digital	27	Supply_air_low_limit
Digital	28	Sensor1_out_of_range
Digital	29	Sensor2_out_of_range
Digital	30	Sensor3_out_of_range
Digital	31	Sensor4_out_of_range

DDC Code: Version - TAP v 2.40

GMGDS00A BNXX

Wiring Template: F13

GREENHECK
Building Value in Air.

INDIRECT GAS WIRING DIAGRAM
FURNACE 1 - 4:1 MODULATING

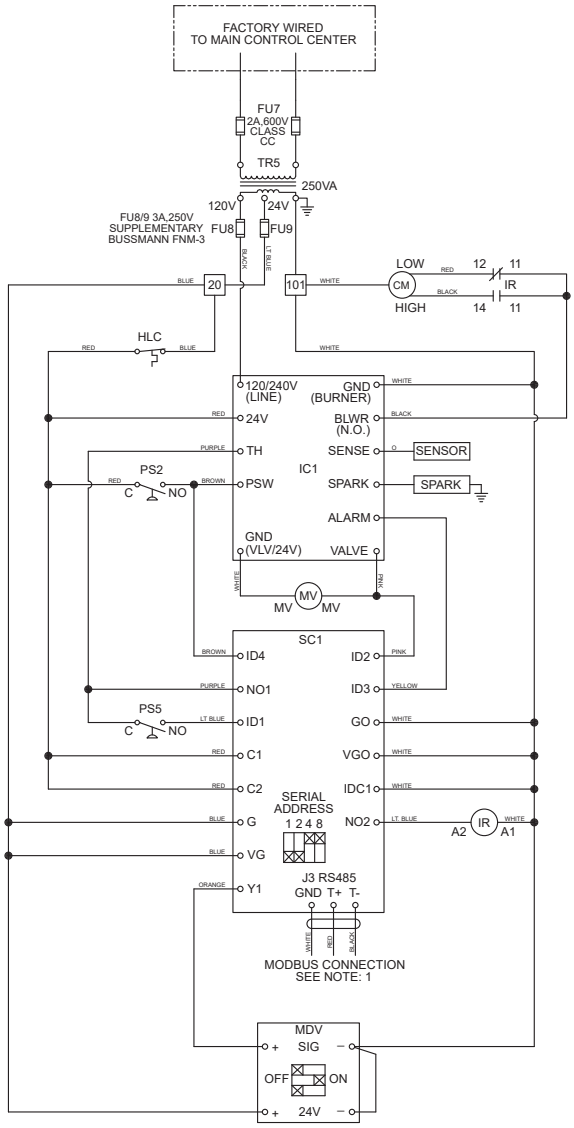

GREENHECK
Building Value in Air.

Wiring Diagram Code:

G4K51P1RX00000S06

CAUTION

UNIT SHALL BE GROUNDED IN ACCORDANCE WITH N.E.C.
POWER MUST BE OFF WHILE SERVICING.

NOTES

USE COPPER CONDUTORS ONLY
60° C FOR TERMINALS RATED LESS THAN 100 AMPS.
75° C FOR TERMINALS RATED 100 AMPS OR MORE.

FIELD CONTROL WIRING RESISTANCE SHOULD
NOT EXCEED 0.75 OHM.

FIELD WIRED – – – – –
FACTORY SUPPLIED AND WIRED ————

NOTE: 1
MODBUS COMMUNCATION WIRING. DAISY CHAIN TO
ALL MODBUS DEVICES.

WIRE COLOR CODE

BK	BLACK	BL	BLUE	BR	BROWN
GY	GRAY	LT BL	LIGHT BLUE	O	ORANGE
PK	PINK	PR	PURPLE	R	RED
W	WHITE	Y	YELLOW		

LEGEND

CM	COMBUSTION BLOWER MOTOR
FU#	FUSE(S)
HLC	HIGH TEMPERATURE LIMIT CONTROL
IC1	IGNITION CONTROL
IR	INDUCTION RELAY
MDV	MODULATING VALVE
MV	MAIN GAS VALVE
PS2	COMBUSTION AIR PROVING SWITCH
PS5	HIGH SPEED PRESSURE SWITCH
SC1	STAGE CONTROLLER
TR#	TRANSFORMER(S)

Wiring Template: S06

MONITORING POINTS

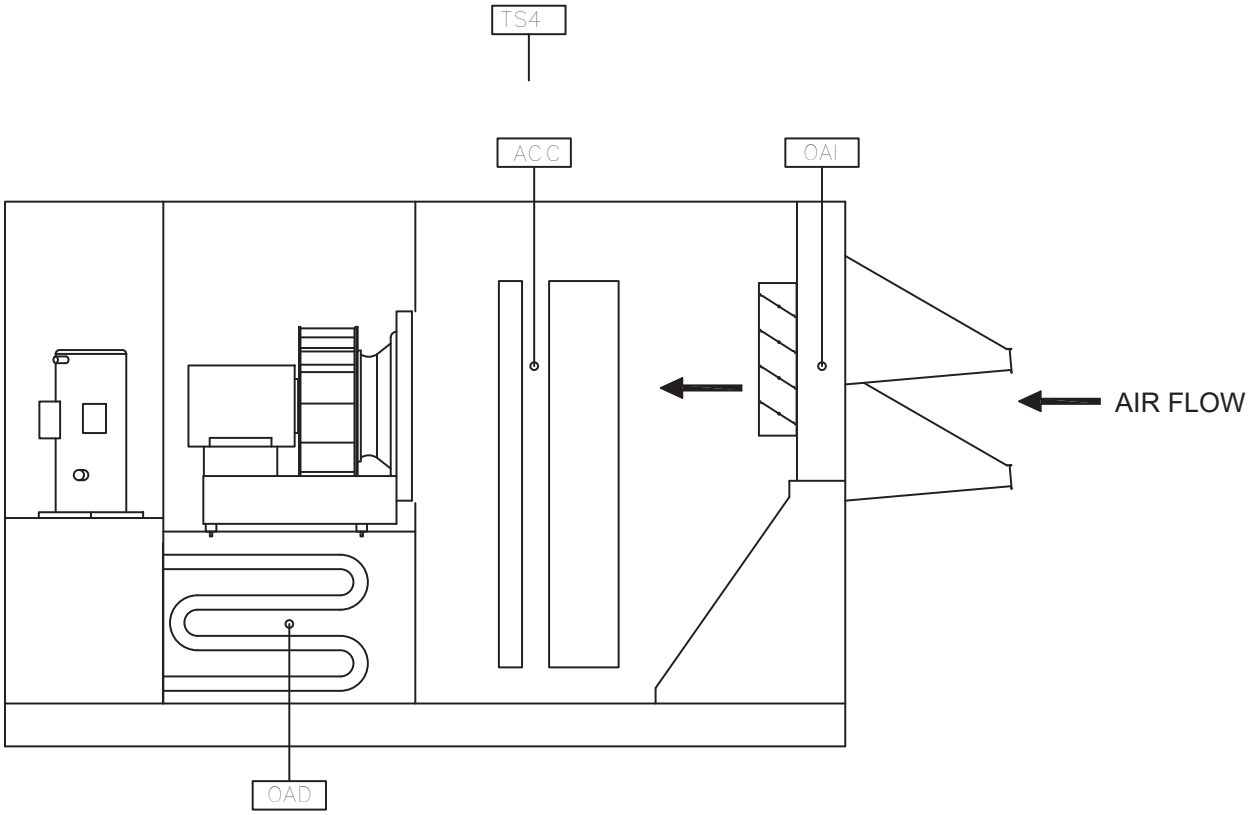

Item	Description	Type
OAI	Outdoor Air Intake Temperature Sensor	10K Ohm NTC (Carel)
OAD	Outdoor Air Discharge Temperature Sensor	10K Ohm NTC (Carel)
ACC	After Cooling Coil Temperature Sensor	10K Ohm NTC (Carel)
TS4	*Room Temp Sensor	10K Ohm NTC (Carel)

*Shipped loose sensor.

GREENHECK
Building Value in Air.

Greenheck Network Interface v2.4 Modbus/BACnet Points List

Type	BACnet Device Instance: 77000 (default) Analog = AV, Integer = AV, Digital = BV				Modbus-RTU/TCP/IP Network Address: 1	Read (R) Write (W)	Description	Included
	Instance	Name	Units		Register			
Analog	1	Outside_Air_Temp	degree F		40002	R/W	Outdoor Air Temp (###.# F)	X
Analog	2	Supply_Air_Temp	degree F		40003	R	Supply Air Temp (###.# F)	X
Analog	3	Cold_Coil_Leaving_Temp	degree F		40004	R	Cold Coil Temp (###.# F)	X
Analog	4	Room_Air_Temp	degree F		40005	R/W	Room AirTemp (if installed) (###.# F)	X
Analog	5	Outside_Humidity	percent		40006	R/W	Outdoor Relative Humidity (###.#%)	
Analog	6	Room_Humidiity	percent		40007	R/W	Room Relative Humidity (###.#%)	
Analog	11	Temp_Set_Point	degree F		40012	R/W	Temperature SetPt (read/write) (###.# F) (See Controller IOM)	X
Analog	12	Active_Temp_Set_Point	degree F		40013	R	Active Temperature Set Point (###.# F)	X
Analog	13	Dehumid_Set_Point	percent		40014	R/W	Dehumidification SetPt (read/write) (##.# F, ##.#%) (See Controller IOM)	X
Integer	1001	Unit_Status_Index	no-units		45003	R	Note 1 (See below)	X
Integer	1002	Heating_Control_Loop	percent		45004	R	Heater output (0-100%)	X
Integer	1003	Cooling_Control_Loop	percent		45005	R	Coolingr output (0-100%)	X
Integer	1004	Energy_Wheel_Speed	percent		45006	R	Energy recovery wheel speed (0-100%)	
Integer	1005	Reheat_Control_Loop	percent		45007	R	Hot gas reheat output (0-100%)	X
Integer	1006	CO2_Level	ppm		45008	R	CO2 Levels (ppm)	
Integer	1007	CO2_Set_Point	ppm		45009	R/W	CO2 Set Point (ppm)	
Integer	1008	Supply_VFD_Speed	percent		45010	R	Supply Fan VFD Speed (0-100%)	X
Integer	1009	Supply_VFD_SetPt	percent		45011	R/W	Supply Fan VFD Set Point (0-100%)	X
Integer	1010	Exhaust_VFD_Speed	percent		45012	R	Exhaust Fan VFD Speed (0-100%)	
Integer	1011	Exhaust_VFD_SetPt	percent		45013	R/W	Exhaust Fan VFD Set Point (0-100%)	
Integer	1012	OA_Damper_Position	percent		45014	R	Outdoor Damper Position (0-100%)	
Integer	1013	OA_Damper_SetPt	percent		45015	R/W	Minimum OA Damper Position (0-100%)	
Integer	1014	Duct_Pressure	no-units		45016	R	Supply Duct Pressure (#.##"WC)	
Integer	1015	Duct_Pressure_SetPt	no-units		45017	R/W	Supply Duct Pressure Set Point (value/100=#.##"WC)	
Integer	1016	Building_Pressure	no-units		45018	R	Building Pressure (value/1000 = 0.###"WC)	
Integer	1017	Building_Pressure_SetPt	no-units		45019	R/W	Building Pressure Set Point (value/1000 = 0.###"WC)	
Integer	1018	Occupied_Unoccupied	no-units		45020	R/W	Occupied/unoccupied command (0=occupied, 1=unoccupied, 2=MWU)	X
Integer	1019	IG_Alarm	no-units		45021	R	IG Alarm - For alarm detail	X
			Inactive_Text	Active_Text				
Digital	1	On_Off_Stat	Off	On	10002	R	Unit ON/OFF Status	X
Digital	2	Supply_Fan_Status	Off	On	10003	R	Supply fan status	X
Digital	3	Exhaust_Fan_Status	Off	On	10004	R	Exhaust fan status	
Digital	4	Occupancy_Status	Unoccupied	Unoccupied	10005	R	Occupancy Status (0=Unoccupied 1=Occupied)	X
Digital	5	Stage_Compressor1_Status	Off	On	10006	R	Stage Compressor #1 status	X
Digital	6	Stage_Compressor2_Status	Off	On	10007	R	Stage Compressor #2 status	
Digital	7	Defrost_Mode	Off	On	10008	R	Defrost mode status	
Digital	8	Digital_Scroll_Status	Off	On	10009	R	Digital Scroll status	**X**
Digital	10	Unit_Start_Stop	Stop	Start	10011	R/W	Unit start/stop command	X
Digital	11	Reset_Alarm	Don't Reset	Reset Alarms	10012	R/W	Reset alarms command	X
Digital	13	Stage_Compressor3_Status	Off	On	10014	R	Stage Compressor #3 status	
Digital	14	Stage_Compressor4_Status	Off	On	10015	R	Stage Compressor #4 status	
Digital	20	Global_Alarm	Off	Alarm	10021	R	Global alarm indication (active when there is at least one alarm)	X
Digital	21	Supply_air_proving	Off	Alarm	10022	R	Supply airflow proving alarm	X
Digital	22	High_Wheel_Pressure	Off	Alarm	10023	R	High wheel pressure (high airflow or dirty wheel)	
Digital	23	Wheel_Rotation	Off	Alarm	10024	R	Wheel rotation alarm	
Digital	24	Exhaust_air_proving	Off	Alarm	10025	R	Exhaust airflow proving alarm	
Digital	25	Dirty_filter	Off	Alarm	10026	R	Dirty filter alarm	
Digital	26	Compressor_trip	Off	Alarm	10027	R	Compressor trip alarm	X
Digital	27	Supply_air_low_limit	Off	Alarm	10028	R	Supply air temperature low limit alarm	X
Digital	28	Sensor1_out_of_range	Off	Alarm	10029	R	Sensor#1 out of range (outside air temperature)	X
Digital	29	Sensor2_out_of_range	Off	Alarm	10030	R	Sensor#2 out of range (supply air temperature)	X
Digital	30	Sensor3_out_of_range	Off	Alarm	10031	R	Sensor#3 out of range (cold coil leaving air temperature)	X
Digital	31	Sensor4_out_of_range	Off	Alarm	10032	R	Sensor#4 out of range (room temperature)	X
Digital	32	Sensor5_out_of_range	Off	Alarm	10033	R	Sensor#5 out of range (room humidity)	
Digital	33	Sensor6_out_of_range	Off	Alarm	10034	R	Sensor#6 out of range (outdoor humidity)	
Digital	34	Sensor7_out_of_range	Off	Alarm	10035	R	Sensor#7 out of range (building pressure sensor)	
Digital	35	Sensor8_out_of_range	Off	Alarm	10036	R	Sensor#8 out of range (duct pressure sensor)	
Digital	36	Sensor#9_out_of_range	Off	Alarm	10037	R	Sensor9 out of range (CO2 sensor)	
Digital	37	Sensor10_out_of_range	Off	Alarm	10038	R	Sensor#10 out of range (auxiliary temp)	

Note: Unit status index: 0=system off; 1=initial delay; 2=opening dampers; 3=exhaust fan starting; 4=supply fan starting; 5=system on; 6=defrost mode active; 7=sys on-economizer; 8=sys on-heating; 9=sys on-cooling; 10=sys on-econ & cooling; 11=sys on-dehumidifying; 12=sys on-dehumidifying & reheat; 13=unocc-unit off; 14=unocc-unit on; 15=unocc-heating; 16=unocc-cooling; 17=unocc-dehumid; 18=unocc-dehumid & reheat; 19=Manual override; 20=remote off; 21=Alarm

GREENHECK
Building Value in Air.

Microprocessor Controller Sequence of Operation

MICROPROCESSOR CONTROLLER: Controller shall be provided with required sensors and programming for rooftop unit. Controller shall be factory programmed, mounted and tested. Controller shall have a LCD readout for changing set points and monitoring unit operation.

UNIT START COMMAND (Unit will be enabled to start once a jumper is placed between R to G):

- Factory mounted and wired outdoor air damper actuator is powered
- Supply fan starts after 10 second delay.
- Tempering options to function as described below.

UNIT STOP COMMAND (OR DE-ENERGIZED):

- Supply fan, exhaust fan and tempering options de-energized.
- Outdoor air damper actuator is spring return close.

OCCUPIED/UNOCCUPIED MODES: Shall be based on a 7-day time clock internal to the controller. The schedule shall be set by the end user. When a user initiates an override input, the controller will switch from unoccupied to occupied mode. The controller will return to the scheduled occupied/unoccupied mode after the override time has expired (60 min, adj.). If internal time clock is disabled, a remote contact or a BMS can control the occupied/unoccupied mode.

Occupied Mode:

- Damper control per below.
- Supply fan ON.
- Heating per below.
- Cooling per below.

Unoccupied Mode (Unit Off): Unit remains off when in unoccupied mode.

- Supply fan OFF
- Tempering OFF
- Outdoor air damper closed.

Morning Warm-up: One hour prior to occupancy, the controller will reference the temperature differential between the current room temperature and the occupied temperature set point. The controller will then look at the amount of time required from the previous days morning warm up sequence and determine how far in advance the unit has to be started to meet the desired ocupied set point by the time of occupancy.

SUPPLY BLOWER SEQUENCE: The supply blower is provided with a factory mounted variable frequency drive. The supply blower speed will be controlled with the following sequence.

Constant Volume (on/off): The supply blower will operate at a constant speed set point (adj.) during operation.

BMS Control: The supply blower is modulated based upon a command from the Building Management System.(This Sequence must be field configured.)

COOLING SEQUENCE: The cooling is controlled to maintain the supply temperature set point. The mechanical cooling will be locked out when the outside air is < 55°F - 2°F hysteresis (adj.).

Packaged DX Cooling (Digital Scroll): The controller will provide a modulating signal for cooling. From 10-100%, the digital scroll will be controlled to maintain discharge temperature.

Modulating Hot Gas Reheat Sequence: During dehumidification the modulating HGRH is controlled to maintain the supply temperature set point.

Standard Head Pressure Control: 2 condensing fans will stage on/off based upon condenser pressure.

DEHUMIDIFICATION SEQUENCE: The cooling is controlled to maintain the cooling-coil set point. The dehumidification sequence will be locked out when the OA is <10°F above the cold-coil set point (adj.).

Cold Coil Setpoint Reset Function: The controller will control the cooling to maintain an active set point. The active set point will set to local control (55° F, adj) from the factory and can be field adjusted to the following sequence:

BMS Control: The controller will adjust the cold coil leaving air temperature set point between the minimum (50°F, adj.) and the maximum (55°F, adj.) set points, to satisfy the desired BMS set point for dehumidification.

REHEAT SEQUENCE: While the unit is in dehumidification mode the outdoor air will be reheated via Modulating Hot Gas Reheat for space neutral applications.

Modulating Hot Gas Reheat: The controller will modulate the hot gas reheat reheat valve with a 0-10 V signal to maintain the supply temperature set point (adj.).

HEATING SEQUENCE: The heating is controlled to maintain the supply temperature set point. The heating will be locked out when the outside air is > 70°F + 2°F hysteresis, (adj.).

Indirect Gas Furnace: The controller will modulate the indirect gas furnace to maintain the supply temperature set point (adj.).

SUPPLY SET POINT RESET FUNCTION. The controller will modulate the heating and cooling to maintain an active set point. The active set point will be set to outdoor air reset from the factory and can be field adjusted to the following sequence:

OA Reset (Default): The controller will monitor the outdoor air temperature and adjusts the desired supply temperature set point accordingly. For example, when the outdoor air is below 55 °F, the controller will change the supply set point to 70 °F. If the outdoor air is above 65 °F, the controller will change the supply set point to 55°F. If the outdoor air temperature is between 55°F and 65°F, the supply set point changes according to the outdoor air reset function. A visual representation of this is shown below.

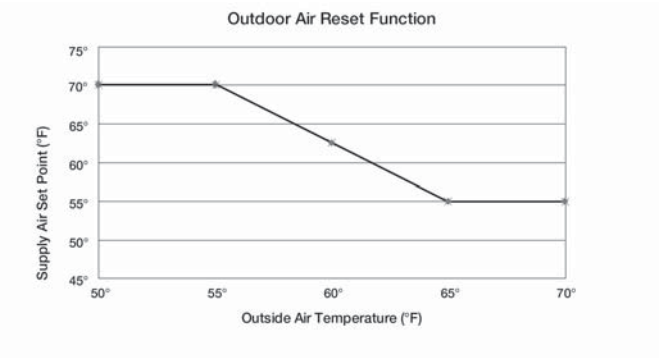

Room Reset: The controller will reset the supply air temperature set point to maintain the room temperature set point (adj.).

Local: The supply set point will be a constant temperature set from the controller (adj.).

BMS Control: The controller will adjust the desired supply temp set point to satisfy the desired BMS set point.

BUILDING FREEZE PROTECTION: If the supply air temperature drops below 35°F (adj.) for 300s (adj.), the controller will de-energize the unit and activate the alarm output.

TEMPERATURE PROTECTION: The controller will enable the supply fan to modulate down to help the unit keep up with heating demand in the event of wheel failure or the unit operating outside design conditions. (This can be enabled under the manufacturer menu in the controller)

ALARMS INDICATION: The controller will display alarms and have one digital output for remote indication of an alarm condition. Possible alarms include:

Building Management System: The controller will send all alarms to the BMS.

Supply Air Alarm: The controller monitors the proving switch on supply blower and sends an alarm in the case of the blower proving switch not engaging for 30s (adj.).

DX Alarm: The controller monitors the refrigerant pressure. In the case of low refrigerant pressure the compressors will shut down until refrigerant pressure returns to normal values and the controller will send a alarm. In the case of high refrigerant pressure the compressors will shut down, requiring a manual reset and the controller will send a alarm.

Temperature Sensor Alarm: The controller sends an alarm in the case of a failed air temperature sensor.

Accessories: The following accessories will be included with the unit to expand the functionality or usability of the controller.

BMS Interfacing: A BMS serial card is provided with the controller for field interfacing with a building management system. Each card is sent out with the default parameters, and the controls contractor must change the appropriate addresses to match the BMS settings.

Phase and Brown Out Protection: Factory mounted and wired component which monitors the main power coming into the unit. If a phase drops out, or if the incoming voltage exceeds the acceptable range, the component will turn off the unit to help protect the electrical systems.

Damper End Switch: Damper end switched will be provided to ensure the supply and exhaust fans do not enable until the dampers are proven open.

GREENHECK
Building Value in Air.

Unit Warranty

Limited Warranty

Greenheck warrants this equipment to be free from defects in material and workmanship for a period of 1 year(s) from the purchase date. Any component which proves defective during the warranty period will be repaired, or replaced, at Greenheck's sole option when returned to our factory, transportation prepaid.

The warranty does not include labor costs associated with troubleshooting, removal, or installation. Greenheck will not be liable for any consequential, punitive, or incidental damages resulting from use, repair, or operation of any Greenheck product.

This warranty is exclusive, and is in lieu of all other warranties, whether written, oral or implied, including the warranty of merchantability and the warranty of fitness for a particular purpose.

Heat Exchanger Extended Warranty

Limited Warranty

Greenheck warrants the stainless steel heat exchanger to be free from defects in material and workmanship for a period of 5 years from the purchase date. Any stainless steel heat exchanger which proves defective during the warranty period will be repaired, or replaced, at Greenheck's sole option when returned to our factory, transportation prepaid.

The warranty does not include labor costs associated with troubleshooting, removal, or installation. Greenheck will not be liable for any consequential, punitive, or incidental damages resulting from use, repair, or operation of any Greenheck product.

This warranty is exclusive, and is in lieu of all other warranties, whether written, oral or implied, including the warranty of merchantability and the warranty of fitness for a particular purpose.

Compressor Extended Warranty

Limited Warranty

Greenheck warrants the refrigerant compressor/compressors to be free from defects in material and workmanship for a period of 5 years from the purchase date. Any compressor which proves defective during the warranty period will be repaired, or replaced, at Greenheck's sole option when returned to our factory, transportation prepaid.

The warranty does not include labor costs associated with troubleshooting, removal, or installation. Greenheck will not be liable for any consequential, punitive, or incidental damages resulting from use, repair, or operation of any Greenheck product.

This warranty is exclusive, and is in lieu of all other warranties, whether written, oral or implied, including the warranty of merchantability and the warranty of fitness for a particular purpose.

HTP

Elite

Heating Boiler

Advanced Heating and Hot Water Systems

P.O. Box 429 · 120 Braley Road · East Freetown, MA 02717 · 508-763-8071· Fax: 508-763-3769

Elite FT Heating Boiler
Submittal Sheet

Elite FT Heating Boiler

JOB NAME:

LOCATION:

ARCH. / ENGR.:

WHOLESALER:

MECH. CONTRACTOR:

MODEL NUMBER: EFT-399

TYPE OF GAS: Natural

BTU/HR INPUT LOW - HIGH FIRE: 80,000 - 399,000

NOTES: B-1, B-2

Heat Exchanger

- **All Stainless Steel ASME "H" Stamped Construction**
- **National Board listed**
- **Low pressure drop, gasketless, vertical tube combustion heat exchanger design – provides maintenance-free operation on internal buildup of material inside the combustion chamber**
- **30 PSI Relief Valve, EFT-55 – 199**
- **80 PSI Relief Valve, EFT-285 and 399 models**

Combustion System

- **Modulating burner with up to 5 to 1 turndown**
- **Up to 96.3% AFUE**
- **High Grade Burner Design**
- **Spark Ignition**
- **Models Available for Natural or LP Gas**
- **Dual Flame monitoring (Spark and Flame probe)**

Integrated Control System

- **Digital operating control with 2 line / 20 character LCD text display to program and monitor boiler operation**
- **Three boiler set point temperature inputs– Boiler Pump – System Pump – DHW Pump / Domestic Hot Water priority with timing**
- **Programmable settings: Outdoor Reset Curve – DHW Supply Set Point – Step Sequence for delayed response for smart zones – Boost Response - Cascade up to 8 boilers**
- **Field Connection Board – Line voltage terminal strip with 120 VAC / 60 Hertz power / low voltage terminal strip with multiple contacts - Cascade wiring CAT 5 / CAT 3**
- **24 Volt monitoring**
- **0-10 VDC input for Building Management System**
- **Boiler output regulation (Adjustment of boiler output down to 50 percent of rated capacity)**
- **Low water protection device**
- **Password Security - Flashing maintenance indicator with optional programmed installer contact information**
- **Time Clock / Data logging – Last 10 fault codes with date and time**
- **Customized freeze protection parameters**
- **Modbus enable through external adapter to monitor or control boiler through BMS system**

Additional Features

- **Superior condensate collection system with overflow protection switch**
- **Vents in Plastic PVC - CPVC - Stainless Steel – ULC S636 flexible polypropylene vent liner (chimney lining only)**
- **Vents up to 200 combined equivalent feet**
- **12 Year Limited Warranty**
- **Manual reset high temperature limit**
- **Dry contact for alarm output**
- **Included wall mount bracket**

Optional

- ☐ **Condensate Neutralizer (CN4-600)**
- ☐ **System / Pipe Sensor (Part # 7250P-324)**
- ☐ **Modbus (7350P-636)**
- ☐ **U.L. 353 Compliant Low Water Cut-Off Interface Kit w/ Manual Reset (7600P-990 for EFT 155 – 399)**

Model EFT-399

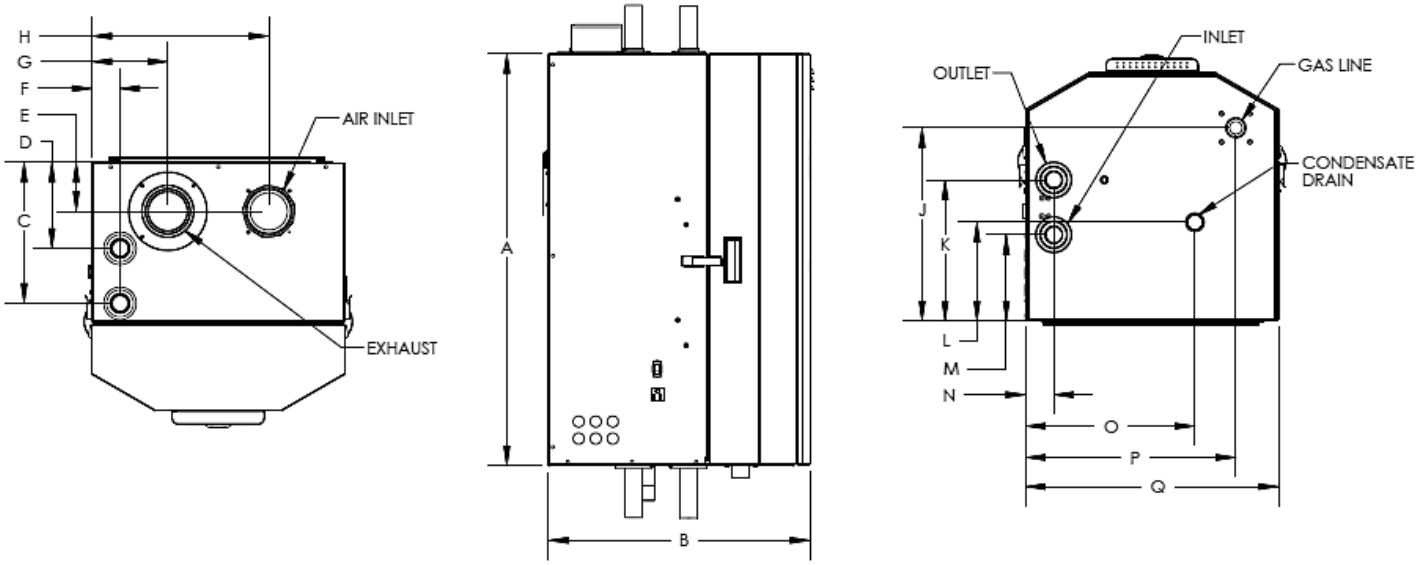

MODEL	MAX MBH	MIN MBH	AFUE	HEATING CAP. MBH	A	B	C	D	E	F	G	H	J	K	L	M	N	O	P	Q
EFT-399	399	80	93.2 *	367	36-3/8"	23-5/8"	13-5/8"	8-1/2"	4-3/4"	2-3/4"	7-3/8"	18-1/8"	18-3/4"	13-5/8"	9-3/4"	8-1/2"	2-3/4"	16-1/2"	19-1/4"	25-1/2"

MODEL	GAS CONNECTION	WATER CONNECTION	AIR INLET	VENT SIZE	PSI RATING	SHIPPING WT. (LBS)
EFT-399	1"	1-1/2"	4"	4"	80 PSI	298

ALL DIMENSIONS ARE APPROXIMATE
* THERMAL EFFICIENCY (NOT AFUE)

LP-387-K2
07/12/13

Submittal Data Information
Model CN4-600

Job: _____ Engineer: _____ Contractor: _____ Rep: _____

Description	Part #	Included
600 MBH Tube Model	CN4-600	(2) ½" MNPT x ¾" PVC Adaptors
600 MBH Recharge Kit	60RCK	(2) Replacement O-rings

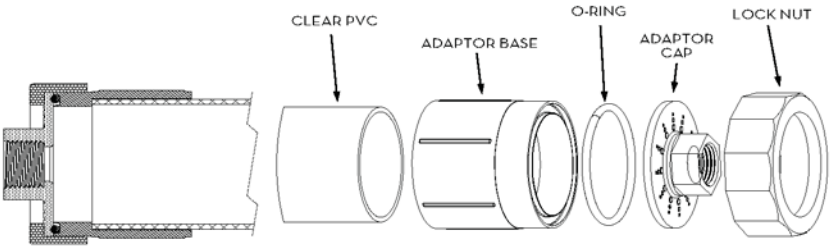

THE CARTRIDGE

An effective condensate neutralizer starts with the cartridge—it should be easy to install and allow easy access not just for replacing the media but for periodic visual inspection. Neutra-Safe® condensate neutralizers also incorporate the exclusive, patent pending integrated unions with O-rings. On either end of the cartridge, these lock rings are designed to allow the service technician to easily replace the media without disturbing the drain piping.

THE MEDIA

Our condensate neutralizers contain clean screened calcite and magnesium oxide. Calcite works by having the acidic aqueous solution come in contact with its surface. It raises the pH by dissolving some of the calcite (calcium carbonate) releasing carbon dioxide and various salts. Some of the salts stay entrained in the aqueous solutions and some may settle to the bottom of the neutralizer. An advantage of calcite is that it is self-limiting and does not over correct causing a high pH condition which is undesirable.

We add granular magnesium oxide (FloMag PWT) to our media for better performance. Calcite and magnesium oxide are used globally in the treatment of potable (drinking) water for raising pH.

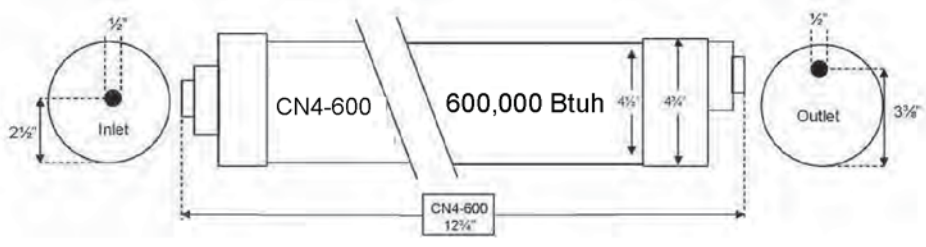

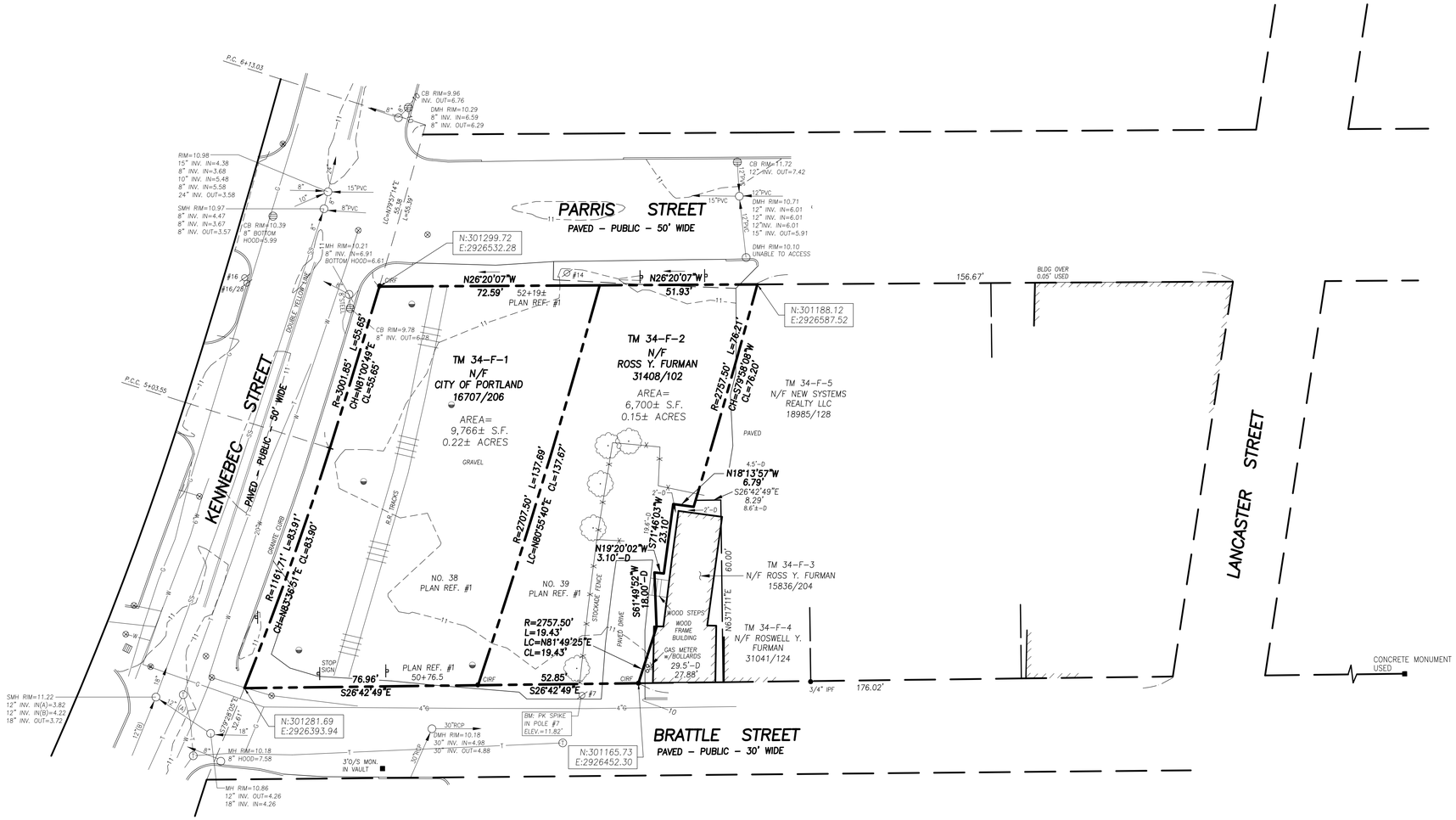

SCALE : 1" = 20'

0' 10' 20' 40'

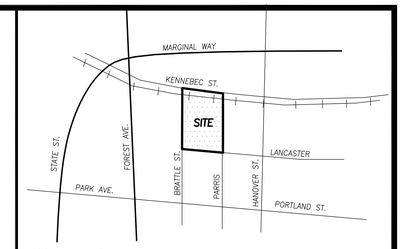

LOCATION MAP

N.T.S.

LEGEND

●	IRON PIPE OR ROD FOUND	—X—X—	FENCE
■	MONUMENT FOUND	═══	CURB
	UTILITY POLE	—OHW—	OVERHEAD WIRES
○	MANHOLE	—W—	WATER LINE
EM/GM	ELECTRIC/GAS METER	—G—	GAS LINE
	SIGN	—T—	TELEPHONE
	CATCH BASIN	—SD—	STORM DRAIN
	HYDRANT	—SS—	SANITARY SEWER
	WATER VALVE OR SHUTOFF	—111—	1' CONTOUR
	GAS VALVE	IPF/IRF	IRON PIPE OR ROD FOUND
	DECIDUOUS TREE	N/F	NOW OR FORMERLY
		000/000	DEED BOOK / PAGE
	PROPOSED BORING	D	DEED DISTANCE

PLAN REFERENCES

1. RIGHT OF WAY & TRACK MAP PORTLAND TERMINAL COMPANY STATION 0+00.00 TO STATION 52+80.00 JUNE 30, 1916 OFFICE OF CHIEF ENGINEER PORTLAND, MAINE V.I.C./1.

2. VARIOUS PLANS OF E.C. JORDAN COMPANY FROM 1900 TO DATE.

3. PORTLAND TERMINAL CO., PORTLAND, MAINE, SALE PLAN – TERMINAL DIVISION, V.S. 1C MAP 2 SEPT. 15, 1998.

4. STANDARD BOUNDARY SURVEY ON KENNEBEC STREET, PORTLAND, MAINE, PORTLAND TERMINAL COMPANY TO ROSS Y. FURMAN MAY 11, 1999 BY OWEN HASKELL, INC.

5. BOUNDARY SURVEY AT 20– KENNEBEC STREET, PORTLAND, MAINE MADE FOR NORTHLAND MANAGEMENT CORPORATION MAY 12, 2017, REV. SEPT. 27, 2017 BY OWEN HASKELL, INC.

GENERAL NOTES

1. BEARINGS AND COORDINATES ARE BASED ON CITY OF PORTLAND CONTROL POINTS:

T116–6–106	T116–5–104
N: 301548.37	N: 301732.74
E: 2926198.20	E: 2925919.22

2. ELEVATIONS BASED ON CITY DATUM, CITY BENCHMARK: "MARGINAL 1" 3 FOOT OFFSET MONUMENT IN FRONT OF CENTURY TIRE, ELEVATION = 9.45'.

UTILITY NOTE

THE UNDERGROUND UTILITIES SHOWN HAVE BEEN LOCATED FROM FIELD SURVEY INFORMATION AND EXISTING DRAWINGS. THE SURVEYOR MAKES NO GUARANTEES THAT THE UNDERGROUND UTILITIES SHOWN COMPRISE ALL SUCH UTILITIES IN THE AREA, EITHER IN SERVICE OR ABANDONED. THE SURVEYOR FURTHER DOES NOT WARRANT THAT THE UNDERGROUND UTILITIES SHOWN ARE IN THE EXACT LOCATION INDICATED ALTHOUGH HE DOES CERTIFY THAT THEY ARE LOCATED AS ACCURATELY AS POSSIBLE FROM INFORMATION AVAILABLE. THE SURVEYOR HAS NOT PHYSICALLY LOCATED THE UNDERGROUND UTILITIES. CALL 1–888–DIGSAFE AT LEAST THREE BUSINESS DAYS BEFORE PERFORMING ANY CONSTRUCTION. DUE TO OSHA CONFINED SPACE REQUIREMENTS, ALL INVERTS AND PIPE SIZES MUST BE VERIFIED PRIOR TO ANY CONSTRUCTION.

CERTIFICATE

OWEN HASKELL, INC. HEREBY CERTIFIES THAT THIS PLAN IS BASED ON, AND THE RESULT OF, AN ON THE GROUND FIELD SURVEY AND THAT TO THE BEST OF OUR KNOWLEDGE, INFORMATION AND BELIEF, IT CONFORMS TO THE BOARD OF LICENSURE FOR PROFESSIONAL LAND SURVEYORS CURRENT STANDARDS OF PRACTICE.

RANDY R. LOUBIER, PLS #2407

DATE

BOUNDARY & TOPOGRAPHIC SURVEY AT 178 KENNEBEC ST. & 57 BRATTLE ST. PORTLAND, MAINE MADE FOR THE SZANTON COMPANY 482 CONGRESS STREET, PORTLAND, MAINE

OWEN HASKELL, INC.
PROFESSIONAL LAND SURVEYORS
390 U.S. ROUTE ONE, UNIT 10, FALMOUTH, MAINE 04105

DRAWN BY:	RS / JLW	DATE:	DEC. 1, 2017	JOB NO.	2017-351 P
CHECKED BY:	RRL	SCALE:	1" = 20'	DRWG. NO.	1

SITE DEVELOPMENT PLANS
FOR
178 KENNEBEC STREET
PORTLAND, MAINE
MARCH 2018
PERMIT DOCUMENTS

APPLICANT:
MAINE WORKFORCE HOUSING, LLC
482 CONGRESS STREET, SUITE 203
PORTLAND, MAINE 04101

PROJECT PARCELS
CITY OF PORTLAND TAX ASSESSOR'S MAP, BLOCK, & LOT NUMBERS

MAP	BLOCK	LOT	RECORD OWNER
34	F	1	CITY OF PORTLAND
34	F	2	ROSS Y. FURMAN

SHEET INDEX

C-1.0	COVER SHEET
C-1.1	GENERAL NOTES & LEGEND
1	BOUNDARY & TOPOGRAPHIC SURVEY
C-2.0	RECORDING PLAT - IN PROGRESS
C-2.1	CONSTRUCTION MANAGEMENT PLAN
C-3.0	SITE PLAN
C-4.0	GRADING, DRAINAGE & EROSION CONTROL PLAN
C-5.0	UTILITY PLAN
C-6.0	SITE DETAILS
C-6.1	UTILITY AND DRAINAGE DETAILS
C-6.2	EROSION CONTROL NOTES & DETAILS
L-1	LANDSCAPE PLAN
P-1	LIGHTING PHOTOMETRIC PLAN

LOCATION MAP
SCALE: 1"=500'

PERMITS

TYPE OF PERMIT	GOVERNING BODY	STATUS
SITE PLAN/SUBDIVISION APPROVAL	CITY OF PORTLAND PLANNING AUTHORITY CITY HALL, 389 CONGRESS STREET PORTLAND, ME 04101 TEL. 207.874.8722	SUBMITTED 3/28/2018
BUILDING PERMIT	CITY OF PORTLAND CODE ENFORCEMENT OFFICE CITY HALL, 389 CONGRESS STREET PORTLAND, ME 04101 TEL. 207.874.8900	TO BE SUBMITTED BY BUILDING CONTRACTOR
UTILITY / STREET OPENING	CITY OF PORTLAND PUBLIC SERVICES DIVISION 55 PORTLAND STREET PORTLAND, ME 04101 TEL. 207.874.8801	TO BE FILED BY SITE CONTRACTOR

UTILITIES

SEWER/STORM
CITY OF PORTLAND
PUBLIC SERVICES DIVISION
55 PORTLAND STREET
PORTLAND, MAINE 04102
207.874.8850

WATER
PORTLAND WATER DISTRICT
22 DOUGLASS STREET
P.O. BOX 3553
PORTLAND, MAINE 04104
207.774.5961

ELECTRIC
CENTRAL MAINE POWER COMPANY
162 CANCO ROAD
PORTLAND, ME 04103
(207) 842-2367

TELEPHONE
FAIRPOINT COMMUNICATIONS
5 DAVIS FARM ROAD
P.O. BOX 11560
PORTLAND, MAINE 04103
888.984.1515

NATURAL GAS
UNITIL
376 RIVERSIDE INDUSTRIAL PARKWAY
PORTLAND, MAINE 04103
866.933.3821

DIG SAFE SYSTEM, INC.
TEL. 1-888-DIG-SAFE (344-7233)
WWW.DIGSAFE.COM

PREPARED BY:

CIVIL ENGINEER:
TERRADYN CONSULTANTS, LLC
565 CONGRESS STREET, SUITE 310
PORTLAND, MAINE 04101
207.926.5111
CONTACT: MICHAEL TADEMA-WIELANDT

ARCHITECT:
ARCHETYPE ARCHITECTS
48 UNION WARF
PORTLAND, ME 04101
207.772.6022
CONTACT: DAVID LLOYD

SURVEYOR:
OWEN HASKELL, INC.
309 U.S. ROUTE ONE, UNIT 10
FALMOUTH, MAINE 04105
207.774.0424
CONTACT: RANDY LOUBIER

ELECTRICAL/MECHANICAL ENGINEER:
BENNETT ENGINEERING
P.O. BOX 297
FREEPORT, MAINE 04032
207.865.9475
CONTACT: WILLIAM BENNETT

PRELIMINARY - NOT FOR CONSTRUCTION

STATE OF MAINE
MICHAEL E. TADEMA-WIELANDT
No. 13864
LICENSED
PROFESSIONAL ENGINEER
Michael E Wielandt

P.E.: MICHAEL E. TADEMA-WIELANDT
DATE: 3-28-2018

NO.	DATE	REVISIONS	APP'D BY
1	3-28-2018	SUBMITTED TO PLANNING BOARD FOR APPROVAL	MTW

565 CONGRESS STREET
SUITE 310
PORTLAND, ME 04102

CUMBERLAND HALL
41 CAMPUS DRIVE, SUITE 101
NEW GLOUCESTER, ME 04260

OFFICE: (207) 926-5111 FAX: (207) 221-1317
www.terradynconsultants.com

TERRADYN
CONSULTANTS, LLC
Civil Engineering - Land Planning - Stormwater Design - Environmental Permitting

SHEET DESCRIPTION
178 KENNEBEC STREET
178 KENNEBEC STREET
PORTLAND, MEAINE 04101
COVER SHEET

PREPARED FOR
MAINE WORKFORCE HOUSING, LLC
482 CONGRESS STREET, SUITE 203
PORTLAND, ME 04101

DATE:	3/16/2018
SCALE:	AS NOTED
DESIGNED:	ARF
JOB NO:	1747
FILE: 1728 COVER.DWG	
SHEET	C-1.0

GENERAL NOTES:

1. THIS PROJECT IS SUBJECT TO THE TERMS AND CONDITIONS OF ALL REGULATIONS ADMINISTERED BY THE LOCAL UTILITY COMPANIES AND THE CITY OF PORTLAND.

2. THE CONTRACTOR SHALL REFER TO THE ARCHITECTURAL PLANS FOR EXACT LOCATIONS AND DIMENSIONS OF THE ENTRANCES, EXITS, PRECISE BUILDING DIMENSIONS, AND EXACT BUILDING UTILITY ENTRANCE POINTS.

3. ALL REQUIRED AND NECESSARY INSPECTIONS AND/OR CERTIFICATIONS REQUIRED BY CODES AND/OR UTILITY SERVICE COMPANIES SHALL BE PERFORMED PRIOR TO ANNOUNCED BUILDING POSSESSION AND THE FINAL SERVICE CONNECTIONS.

4. THE CONTRACTOR IS SPECIFICALLY CAUTIONED THAT THE LOCATION AND/OR THE ELEVATION OF THE EXISTING UTILITIES AS SHOWN ON THESE PLANS IS BASED ON RECORDS OF THE VARIOUS UTILITY COMPANIES AND, WHERE POSSIBLE, MEASUREMENTS TAKEN IN THE FIELD. THIS INFORMATION IS NOT TO BE RELIED ON AS BEING EXACT OR COMPLETE. THE CONTRACTOR MUST CALL THE APPROPRIATE UTILITY COMPANY AND DIG SAFE (1-888-DIGSAFE). IT SHALL BE THE RESPONSIBILITY OF THE CONTRACTOR TO RELOCATE ALL EXISTING UTILITIES WHICH CONFLICT WITH THE PROPOSED IMPROVEMENTS SHOWN ON THE PLANS, AT NO EXTRA EXPENSE TO THE OWNER.

5. MAINTENANCE OF EROSION CONTROL MEASURES IS OF PARAMOUNT IMPORTANCE TO THE OWNER AND THE CONTRACTOR IS RESPONSIBLE FOR COMPLYING WITH ALL EROSION CONTROL MEASURES SHOWN ON THE PLANS. ADDITIONAL EROSION CONTROL MEASURES SHALL BE INSTALLED IF DEEMED NECESSARY BY ONSITE INSPECTIONS OF THE OWNER OR THEIR REPRESENTATIVES AT NO ADDITIONAL COST TO THE OWNER.

6. ALL MATERIAL SCHEDULES SHOWN ON THE PLANS ARE FOR GENERAL INFORMATION ONLY. THE CONTRACTOR SHALL PREPARE HIS OWN MATERIAL SCHEDULES BASED UPON HIS PLAN REVIEW. ALL SCHEDULES SHALL BE VERIFIED IN THE FIELD BY THE CONTRACTOR PRIOR TO ORDERING MATERIALS OR PERFORMING WORK.

7. ALL MATERIALS AND CONSTRUCTION METHODS SHALL CONFORM TO PROJECT CONTRACT SPECIFICATIONS, AND THE CITY OF PORTLAND TECHNICAL MANUAL STANDARDS, WHICHEVER IS MORE STRINGENT.

8. TOPOGRAPHIC AND BOUNDARY SURVEY INFORMATION WAS PROVIDED BY OWEN HASKELL, INC. ELEVATIONS BASED ON CITY DATUM, CITY BENCHMARK: "MARGINAL 1" 3' O/S MONUMENT IN FRONT OF CENTURY TIRE, ELEVATION 9.45'. BEARINGS ARE BASED ON MAINE STATE PLANE COORDINATE SYSTEM MAINE WEST NAD83.

9. FEMA MAP COMMUNITY PANEL NUMBER 230051 0013 B. THE SITE IS LOCATED IN A C ZONE.

10. THE PROPERTY SHOWN ON THIS PLAN MAY BE DEVELOPED AND USED ONLY AS DEPICTED IN THIS APPROVED PLAN. ALL ELEMENTS AND FEATURES OF THE PLAN AND ALL THE PROPERTY WHICH APPEARS IN THE RECORD OF THE PLANNING BOARD PROCEEDINGS ARE CONDITIONS OF THE APPROVAL. NO CHANGE FROM THE CONDITIONS OF APPROVALS IS PERMITTED UNLESS AN AMENDED PLAN IS FIRST SUBMITTED TO AND APPROVED BY THE PLANNING AUTHORITY.

11. ALL SIGNAGE SHALL CONFORM TO THE STANDARDS FOR SIZE, HEIGHT, LOCATION AND REFLECTIVITY SET FORTH IN THE MANUAL ON UNIFORM TRAFFIC CONTROL DEVICES (MUTCD).

12. ALL CURB SHALL CONFORM TO THE FOLLOWING SPECIFICATIONS AS NOTED ON THE PLANS: GRANITE CURB SHALL MEET THE REQUIREMENTS OF MaineDOT SPECIFICATIONS 609.03 AND CITY OF PORTLAND TECHNICAL STANDARDS.

13. ALL DIMENSIONING UNLESS OTHERWISE NOTED IS TO THE FACE OF CURB OR FACE OF BUILDING.

14. THE FACILITY IS SERVICED BY PUBLIC WATER, SEWER, NATURAL GAS, AND UNDERGROUND POWER.

15. THE CONTRACTOR IS REQUIRED TO NOTIFY THE CITY OF PORTLAND PUBLIC WORKS INSPECTION SERVICES DIVISION (874-8300 EXT. 8838), CODE ENFORCEMENT OFFICE AND DEVELOPMENT REVIEW COORDINATOR IN WRITING THREE (3) DAYS PRIOR TO THE BEGINNING OF CONSTRUCTION. A PRE-CONSTRUCTION MEETING MAY BE REQUIRED TO INCLUDE THE PUBLIC WORKS AUTHORITY OR DEVELOPMENT REVIEW COORDINATOR.

16. AN APPROVED SET OF PLANS AND ALL APPLICABLE PERMITS MUST BE AVAILABLE AT THE CONSTRUCTION SITE.

17. WARNING SIGNS, MARKERS, BARRICADES OR FLAGMEN MUST BE EMPLOYED ON ADJACENT STREETS AS NECESSARY. THE CONTRACTOR SHALL COORDINATE AND SEEK APPROVAL FROM THE PUBLIC SERVICE DIVISION FOR THE PLACEMENT/PARKING OF EQUIPMENT WITHIN THE PUBLIC RIGHT OF WAY.

18. CONSTRUCTION DEBRIS SHALL BE CONTAINERIZED AND DISPOSED OF IN ACCORDANCE WITH THE CITY OF PORTLAND'S SOLID WASTE ORDINANCE CHAPTER 12. ALL SALVAGED MATERIAL WITHIN THE PUBLIC R.O.W.(SIDEWALKS, BRICKS, GRANITE CURB) NOT REUSED SHALL BE DISPOSED OF AS DIRECTED BY THE PORTLAND PUBLIC SERVICES DEPARTMENT AT NO EXTRA COST TO THE OWNER.

19. ANY DAMAGE TO PUBLIC OR PRIVATE PROPERTY RESULTING FROM CONSTRUCTION ACTIVITIES SHALL BE REPAIRED BY THE CONTRACTOR AT THEIR EXPENSE.

20. PROPERTY MARKERS AND STREET LINE MONUMENTS SHALL BE PROPERLY PROTECTED AT ALL TIMES DURING CONSTRUCTION TO INSURE INTEGRITY. IF DISTURBED THEY SHALL BE REPLACED BY A SURVEYOR REGISTERED IN THE STATE OF MAINE AT THE CONTRACTOR'S EXPENSE.

21. A STREET OPENING PERMIT MUST BE OBTAINED FROM THE CITY OF PORTLAND PUBLIC WORKS DEPARTMENT PRIOR TO BEGINNING ANY WORK WITHIN THE CITY RIGHT-OF-WAY. ALL WORK WITHIN THE PUBLIC RIGHT OF WAY SHALL BE COMPLETED IN CONFORMANCE TO THE CITY'S RULES AND REGULATIONS FOR EXCAVATION ACTIVITIES IN PUBLIC RIGHT OF WAYS.

22. CONTRACTOR MUST MAINTAIN THROUGH TRAFFIC ON ADJACENT STREETS AT ALL TIMES.

23. ALL METHODS AND MATERIALS USED IN THE CONSTRUCTION OF THE IMPROVEMENTS IDENTIFIED HEREIN SHALL CONFORM TO THE CITY OF PORTLAND CONSTRUCTION AND TECHNICAL STANDARDS AND SPECIFICATIONS AND/OR CURRENT MaineDOT STANDARDS AND SPECIFICATIONS, WHICHEVER IS MORE STRINGENT.

24. RECORD DRAWINGS MUST INCLUDE ALL BURIED UTILITIES INCLUDING, BUT NOT LIMITED TO, BENDS, APPURTENANCES, AND OTHER FEATURES, TO BE LOCATED IN THE FIELD BY GIS AND RECORDED AS AN AS-BUILT PLAN BY THE CONTRACTOR AT THE END OF THE PROJECT. THIS PLAN SHALL ALSO BE PROVIDED TO THE OWNER.

25. THE CONTRACTOR SHALL REFER TO THE ARCHITECTURAL DRAWINGS PREPARED BY ARCHETYPE ARCHITECTS FOR EXACT LOCATIONS AND DIMENSIONS OF THE ENTRANCES, EXIT PORCHES, PRECISE BUILDING DIMENSIONS AND EXACT BUILDING UTILITY ENTRANCE POINTS.

26. ALL REQUIRED AND NECESSARY INSPECTIONS AND/OR CERTIFICATIONS REQUIRED BY CODES AND/OR UTILITY SERVICE COMPANIES SHALL BE PERFORMED PRIOR TO ANNOUNCED BUILDING POSSESSION AND THE FINAL SERVICE CONNECTIONS.

27. CONTRACTORS SHALL NOTIFY OPERATORS WHO MAINTAIN UNDERGROUND UTILITIES IN THE AREA OF PROPOSED EXCAVATION OR BLASTING AT LEAST THREE (3) BUT NOT MORE THAN (30) DAYS PRIOR TO COMMENCEMENT OF EXCAVATION OR DEMOLITION. CONTRACTORS SHALL BE RESPONSIBLE FOR COMPLIANCE WITH THE REQUIREMENTS OF 23 MRSA 3360-A.

GRADING AND DRAINAGE NOTES:

1. ALL STORM DRAIN PIPE SHALL BE SMOOTH BORE INTERIOR PROVIDING A MANNINGS ROUGHNESS COEFFICIENT OF n = 0.013 OR LESS. UNLESS A SPECIFIC PIPE MATERIAL IS CALLED FOR ON THE CONTRACT DRAWINGS. PVC PIPING SHALL NOT BE USED IN AREAS OF EXPOSED SUNLIGHT.

2. THE CONTRACTOR SHALL EXERCISE EXTREME CAUTION DURING EARTHWORK OPERATIONS TO INSURE THAT DISTURBANCE TO ANY STEEP SLOPE AREAS ARE MINIMIZED TO THE EXTENT PRACTICABLE.

3. THE CONTRACTOR IS HEREBY CAUTIONED THAT ALL SITE FEATURES SHOWN ARE BASED ON FIELD OBSERVATIONS BY THE SURVEYOR AND BY INFORMATION PROVIDED BY OTHERS. THE INFORMATION IS NOT TO BE RELIED ON AS BEING EXACT OR COMPLETE. THE CONTRACTOR SHALL CONTACT DIG SAFE (1-888-DIGSAFE) AT LEAST THREE (3) BUT NOT MORE THAN THIRTY (30) DAYS PRIOR TO COMMENCEMENT OF EXCAVATION OR DEMOLITION TO VERIFY HORIZONTAL AND VERTICAL LOCATION OF ALL UTILITIES.

4. ALL PAVING WITHIN THE PUBLIC R.O.W. SHALL BE PERFORMED IN ACCORDANCE WITH THE CITY OF PORTLAND RULES AND REGULATIONS FOR EXCAVATION ACTIVITIES IN THE PUBLIC R.O.W.

5. NO HOLES, TRENCHES OR STRUCTURES SHALL BE LEFT OPEN OVERNIGHT IN ANY EXCAVATION ACCESSIBLE TO THE PUBLIC OR IN PUBLIC RIGHTS-OF-WAY.

6. THE CONTRACTOR SHALL TAKE FULL RESPONSIBILITY FOR ANY CHANGES AND DEVIATION OF APPROVED PLANS NOT AUTHORIZED BY THE ARCHITECT/ENGINEER AND/OR CLIENT/OWNER.

7. CONTRACTOR SHALL INCORPORATE PROVISIONS AS NECESSARY IN CONSTRUCTION TO PROTECT EXISTING STRUCTURES AND PHYSICAL FEATURES THAT ARE OUTSIDE THE SCOPE OF WORK. THE CONTRACTOR SHALL MAINTAIN SITE STABILITY DURING CONSTRUCTION TO AVOID EROSION AND SEDIMENT TRANSPORT. CONTRACTOR SHALL RESTORE ALL AREAS TO A FINAL STABILIZED CONDITION AS DIRECTED BY DESIGN DRAWINGS.

8. CONTRACTOR SHALL VERIFY ALL DIMENSIONS AND CONDITIONS IN THE FIELD PRIOR TO FABRICATION AND ERECTION OF ANY MATERIAL. ANY UNUSUAL CONDITIONS SHALL BE REPORTED TO THE ENGINEER.

9. EXTERIOR GRADES AROUND PROPOSED STRUCTURE SHALL BE COORDINATED WITH FINAL BUILDING PLANS AND PROVIDE FOR ALL ACCESS OPENINGS.

10. SUBGRADE FILL PLACED BENEATH ALL PERMANENT PAVEMENT, SIDEWALK OR CONCRETE SURFACES EXCLUDING ANY BUILDING AREAS, SHALL BE GRANULAR BORROW. SUBGRADE FILL PLACED BENEATH ALL LANDSCAPE AREAS EXCEPT THOSE ADJACENT THE FOUNDATION SYSTEMS MAY BE A COMMON BORROW MATERIAL SUITABLE FOR EMBANKMENT CONSTRUCTION, FREE FROM FROZEN MATERIAL, PERISHABLE RUBBLE, PEAT, ORGANICS, ROCKS LARGER THAN 12" IN DIAMETER, VEGETATION AND OTHER MATERIAL UNSUITABLE FOR ROADWAY AND SUBGRADE CONSTRUCTION. EXCAVATED ON-SITE MATERIALS MAY BE USED FOR FILL PROVIDED THE MATERIAL IS FREE FROM UNSUITABLE MATERIAL DESCRIBED IN THIS NOTE AND UPON APPROVAL OF THE ENGINEER. EXCAVATED ONSITE MATERIALS MAY NOT BE USED AS COMPACTED STRUCTURAL FILL BENEATH THE BUILDING AREAS OR AS FOUNDATION BACKFILL. GRANULAR BORROW AND COMMON BORROW SHALL COMPLY WITH MaineDOT SPECIFICATIONS.

11. ALL FILLS SHALL BE PLACED IN LAYERS NOT MORE THAN 12" LOOSE DEPTH AND COMPACTED BY HEAVY COMPACTION EQUIPMENT. MINIMUM COMPACTION SHALL BE 95% OF MAXIMUM DENSITY ASTM 1557, MODIFIED AND FIELD DENSITY ASTM D2922 (NUCLEAR METHODS).

12. THE CONTRACTOR SHALL ANTICIPATE THAT GROUNDWATER WILL BE ENCOUNTERED DURING CONSTRUCTION AND SHALL INCLUDE SUFFICIENT COSTS WITHIN THEIR BID TO PROVIDE DEWATERING AS NECESSARY. NO SEPARATE PAYMENT SHALL BE MADE TO THE CONTRACTOR FOR DEWATERING.

CONSTRUCTION MANAGEMENT NOTES:

1. ALL CONSTRUCTION SHALL COMPLY WITH 2009 NFPA 1 CHAPTER 16 SAFE GUARDS DURING BUILDING CONSTRUCTION, ALTERATION AND DEMOLITION OPERATIONS.

2. ANY CUTTING AND WELDING WORK PERFORMED ONSITE SHALL REQUIRE A "HOT WORK" PERMIT FROM THE PORTLAND FIRE DEPARTMENT.

3. THE GENERAL CONTRACTOR SHALL POST EMERGENCY CONTACT INFORMATION ON THE PROJECT SITE PROPERTY DURING CONSTRUCTION IN THE EVENT OF AN AFTER HOURS EMERGENCY. THIS CONTACT INFORMATION SHALL ALSO BE PROVIDED TO THE PORTLAND FIRE DEPARTMENT.

4. IF THE SITE IS SECURED BY TEMPORARY OR PERMANENT FENCING WITH LOCKED GATES, THEN THE APPLICANT OR ASSIGNED REPRESENTATIVE SHALL PURCHASE A KNOX PADLOCK FROM THE PORTLAND FIRE DEPARTMENT TO ALLOW ACCESS BY THE PORTLAND FIRE DEPARTMENT.

5. STREETS SHALL MAINTAIN A 20' WIDTH FOR FIRE DEPARTMENT ACCESS AT ALL TIMES.

6. FIRE HYDRANTS SHALL NOT BE BLOCKED OR ENCLOSED BY FENCING. A 3' CLEARANCE SHALL BE MAINTAINED AT ALL TIMES AROUND FIRE HYDRANTS.

UTILITY NOTES:

1. ALL REQUIRED UTILITIES SERVING THE PROJECT SHALL BE COORDINATED BETWEEN THE SITE WORK CONTRACTOR AND DIVISION 22/26 CONTRACTOR(S). THE SITE WORK CONTRACTOR SHALL BE RESPONSIBLE TO EXTEND ALL PROPOSED UTILITIES TO WITHIN FIVE (5) FEET OF THE BUILDING TO A LOCATION COORDINATED WITH THE MECHANICAL AND ELECTRICAL SUBCONTRACTORS. THE BUILDING CONTRACTOR SHALL BE RESPONSIBLE FOR ALL UTILITIES WITHIN FIVE (5) FEET AND INSIDE THE BUILDING OR UNDER SLAB.

2. THE CONTRACTOR SHALL COORDINATE THE INSTALLATION OF AND/OR RELOCATION OF OVERHEAD AND UNDERGROUND TELEPHONE WITH FAIRPOINT COMMUNICATIONS. CONTRACTOR SHALL BE RESPONSIBLE FOR CONDUITS, PULL WIRES, TRENCHING AND BACKFILLING NECESSARY TO COMPLETE THE WORK.

3. THE CONTRACTOR SHALL COORDINATE THE INSTALLATION OF ELECTRIC SERVICE WITH CENTRAL MAINE POWER, THE TELECOMMUNICATIONS SERVICE WITH FAIRPOINT COMMUNICATIONS, AND THE CABLE SERVICE WITH TIME WARNER CABLE. ALL WORK SHALL CONFORM TO THE PROJECT SPECIFICATIONS OR UTILITY COMPANY STANDARDS, WHICHEVER IS MORE STRINGENT.

4. ADJUST ALL MANHOLES, CATCH BASINS, CURB BOXES, ETC. WITHIN LIMITS OF WORK TO FINISH GRADE AT NO ADDITIONAL EXPENSE TO THE OWNER.

5. ALL UNDERGROUND CONDUITS SHALL HAVE NYLON PULL ROPES TO FACILITATE PULLING CABLES.

6. THE CONTRACTOR SHALL OBTAIN, PAY FOR, AND COMPLY WITH ALL REQUIRED PERMITS, ARRANGE FOR ALL INSPECTIONS, AND SUBMIT COPIES OF ACCEPTANCE CERTIFICATES TO THE OWNER PRIOR TO COMPLETION OF THE PROJECT.

7. THE CONTRACTOR SHALL PROVIDE AND INSTALL ALL BOXES, FITTINGS, CONNECTORS, COVER PLATES AND OTHER MISCELLANEOUS ITEMS NOT NECESSARILY DETAILED ON THE DRAWINGS TO RENDER INSTALLATION OF UTILITIES COMPLETE AND OPERATIONAL, AT NO EXTRA EXPENSE TO THE OWNER.

8. A 10 FOOT MINIMUM EDGE TO EDGE HORIZONTAL SEPARATION SHALL BE PROVIDED BETWEEN ALL WATER AND SANITARY SEWER LINES. A 12 INCH OUTSIDE TO OUTSIDE VERTICAL SEPARATION SHALL BE PROVIDED AT ALL WATER AND SANITARY SEWER CROSSINGS.

9. THE CONTRACTOR SHALL PROVIDE TEMPORARY SERVICES AS REQUIRED TO PROVIDE CONTINUOUS SERVICE TO THE JOBSITE. TEMPORARY SERVICES SHALL COMPLY WITH ALL FEDERAL, STATE, LOCAL AND UTILITY COMPANY STANDARDS. COORDINATE ALL TEMPORARY SERVICES WITH UTILITY COMPANY, OWNER, AND AFFECTED BUSINESSES.

10. ALL SANITARY SERVICES AND APPURTENANCES SHALL BE CONSTRUCTED IN ACCORDANCE WITH THE CURRENT STANDARDS AND SPECIFICATIONS OF THE CITY OF PORTLAND PUBLIC WORKS DEPARTMENT. ALL SANITARY SERVICES AND APPURTENANCES TO BE ABANDONED SHALL BE PROPERLY RECORDED WITH PORTLAND PUBLIC WORKS ENGINEERING DEPARTMENT. A DIGITAL VIDEOTAPE SHALL BE MADE OF SANITARY SEWER SYSTEMS TO BE UTILIZED PRIOR TO CONSTRUCTION; UPSTREAM PIPES INTENDED FOR ABANDONMENT SHALL BE INSPECTED TO VERIFY THAT THEY NO LONGER SERVE OTHER FACILITIES.

PERMITTING NOTES:

1. THIS PROJECT IS SUBJECT TO THE TERMS AND CONDITIONS OF THE SITE PLAN REVIEW PERMIT FROM THE CITY OF PORTLAND WHICH WILL BE MADE A PART OF THE CONTRACT BID DOCUMENTS. THE CONSTRUCTION WILL BE GOVERNED BY THE ZONING ORDINANCES WHICH ARE AVAILABLE FOR VIEWING AT THE OFFICE OF THE ENGINEER OR THE MUNICIPAL OFFICE.

DIMENSIONAL REQUIREMENTS (B7 ZONE)		
STANDARD	B7	PROVIDED
MIN. LOT SIZE	NONE	16,553 SF
MIN. FRONTAGE	NONE	110 Ft
MIN. LOT AREA PER DWELLING UNIT	NONE	360 SF/UNIT
MIN. FRONT YARD	NONE REQUIRED	< 1 FT
MIN. SIDE YARD	NONE REQUIRED	< 1 FT ON BRATTLE ST 3.5 FT ON PARRIS ST
MIN. REAR YARD	NONE REQUIRED	VARIES
MAXIMUM STREET SETBACK	10 FT	3.50 Ft
MAX. LOT COVERAGE	100%	44%
MAXIMUM STRUCTURE HEIGHT	105 FT	83 Ft
PARKING	TBD BY PLANNING BOARD	19
BICYCLE PARKING	2 SPACES PER EVERY 5 UNITS (18 SPACES)	18

LEGEND

- EXISTING PROPERTY LINE
- PROJECT SITE BOUNDARY
- EXISTING SETBACK LINE
- PROPOSED EASEMENT
- 124 EXISTING MINOR CONTOUR
- 124 EXISTING MAJOR CONTOUR
- 124 PROPOSED CONTOUR
- SD EXISTING STORMDRAIN
- SD PROPOSED STORMDRAIN
- S EXISTING SANITARY SEWER
- S PROPOSED SANITRY SEWER
- W EXISTING WATER LINE
- W PROPOSED WATER LINE
- UD EXISTING UNDERDRAIN
- UD PROPSED UNDERDRAIN
- OHE EXISTING OVERHEAD ELECTRIC & TELEPHONE
- OHE PROPOSED OVERHEAD ELECTRIC & TELEPHONE
- UGE EXISTING UNDERGROUND ELECTRIC & TELEPHONE
- UGE PROPOSED UNDERGROUND ELECTRIC & TELEPHONE
- EXISTING EDGE OF PAVEMENT
- PROPOSED EDGE OF PAVEMENT
- EXISTING EDGE OF GRAVEL
- PROPOSED EDGE OF GRAVEL
- EXISTING CURB
- PROPOSED CURB
- PROPOSED FENCE
- SF SILT FENCE
- TP-A TEST PIT
- EXISTING VALVE
- PROPOSED VALVE
- EXISTING HYDRANT
- EXISTING LIGHT POLE
- PROPOSED LIGHT POLE
- EXISTING UTILITY POLE
- EXISTING CATCH BASIN
- PROPOSED CATCH BASIN
- EXISTING DRAIN MANHOLE
- PROPOSED DRAIN MANHOLE
- EXISTING SEWER MANHOLE
- PROPOSED SEWER MANHOLE
- 30.20 EXISTING SPOT GRADE
- 30.20 PROPOSED SPOT GRADE
- SURVEY CONTROL POINT
- EXISTING MONUMENT
- EXISTING IRON PIPE
- EXISTING SIGN
- PROPOSED SIGN
- EXISTING BUILDING
- PROPOSED BUILDING
- PROPOSED CONCRETE
- PROPOSED PAVEMENT
- PROPOSED BRICK

STATE OF MAINE
MICHAEL E. TADEMA-WIELANDT
No. 11567
LICENSED
PROFESSIONAL ENGINEER

P.E.: MICHAEL E. TADEMA-WIELANDT
DATE: 3-28-2018

NO.	DATE	REVISIONS	APP'D BY
1	3-28-2018	SUBMITTED TO PLANNING BOARD FOR APPROVAL	MTW

TERRADYN CONSULTANTS, LLC
CUMBERLAND HALL
41 CAMPUS DRIVE, SUITE 101
NEW GLOUCESTER, ME 04260
565 CONGRESS STREET
SUITE 310
PORTLAND, ME 04102
OFFICE: (207) 926-5111 FAX: (207) 221-1317
www.terradynconsultants.com
Civil Engineering - Land Planning - Stormwater Design - Environmental Permitting

SHEET DESCRIPTION
178 KENNEBEC STREET
178 KENNEBEC STREET
PORTLAND, ME 04101
GENERAL NOTES & LEGEND

PREPARED FOR
MAINE WORKFORCE HOUSING, LLC
482 CONGRESS STREET, SUITE 203
PORTLAND, ME 04101

DATE:	3/16/2018
SCALE:	AS NOTED
DESIGNED:	ARF
JOB NO:	1747
FILE: 1562-COVER.DWG	
SHEET	C-1.1

PRELIMINARY - NOT FOR CONSTRUCTION

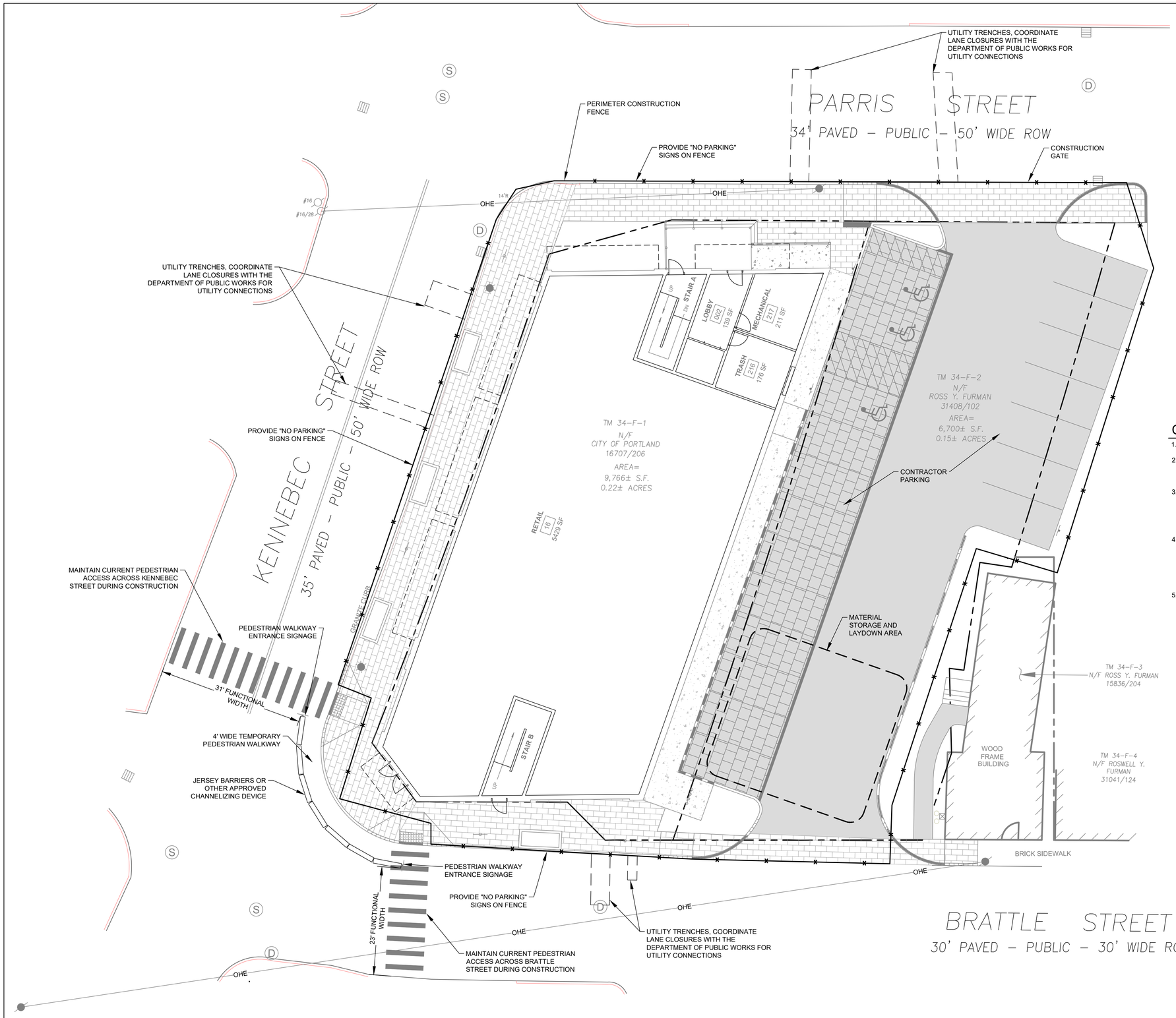

CONSTRUCTION MANAGEMENT NOTES:

1. THE CONSTRUCTION GATE SHALL SWING INTO THE PROJECT SITE
2. FENCING AROUND THE PERIMETER OF THE CONSTRUCTION WORK ZONE WILL BE MAINTAINED THROUGHOUT BUILDING CONSTRUCTION, UNLESS OTHERWISE APPROVED BY THE DEPARTMENT OF PUBLIC WORKS.
3. DURING CONSTRUCTION OF THE PROPOSED BRICK SIDEWALK, THE EXISTING PEDESTRIAN ACCESS ACROSS BRATTLE AND KENNEBEC STREETS WILL BE IMPACTED. THE DEPARTMENT OF PUBLIC WORKS SHALL BE NOTIFIED AT LEAST 48 HOURS IN ADVANCE OF CLOSURES. DURING THIS TIME, A TEMPORARY WALKWAY AND SIGNAGE SHALL BE PROVIDED AS SHOWN. ADA ACCESSIBILITY SHALL BE MAINTAINED AT ALL TIMES.
4. TEMPORARY PARTIAL TRAVEL LANE CLOSURE OF KENNEBEC, PARIS, AND BRATTLE STREETS WILL BE NECESSARY DURING UNDERGROUND UTILITY INSTALLATION. THIS WORK SHALL BE SCHEDULED AND SEQUENCED TO MINIMIZE THE DURATION OF ANY STREET OCCUPANCY. AT NO TIME CAN CONSTRUCTION ACTIVITY INCLUDING DELIVERY VEHICLES CLOSE OR BLOCK STREETS OR AFFECT PUBLIC SAFETY ACCESS WITHOUT PRIOR NOTICE AND APPROVAL OF THE DEPARTMENT OF PUBLIC WORKS.
5. TEMPORARY PEDESTRIAN WALKWAYS SHALL BE PROVIDED WITH A FUNCTIONAL WIDTH OF 4'. NO PORTION OF THE 4' WIDTH MAY BE BLOCKED BY SIGNAGE OR BARRIERS.

GRAPHIC SCALE

10 0 5 10 20 40

(IN FEET)
1 inch = 10 ft.

PRELIMINARY - NOT FOR CONSTRUCTION

STATE OF MAINE
MICHAEL E. TADEMA-WIELANDT
No. 7777
LICENSED
PROFESSIONAL ENGINEER

P.E.: MICHAEL E. TADEMA-WIELANDT
DATE: 3-28-2018

NO.	DATE	REVISIONS	APP'D BY
1	3-28-2018	SUBMITTED TO PLANNING BOARD FOR APPROVAL	MTW

TERRADYN CONSULTANTS, LLC
CUMBERLAND HALL
49 CLARK DRIVE, SUITE 101
NEW GLOUCESTER, ME 04260
565 CONGRESS STREET
SUITE 410
PORTLAND, ME 04102
OFFICE: (207) 926-5111 FAX: (207) 221-1317
www.terradynconsultants.com
Civil Engineering - Land Planning - Stormwater Design - Environmental Permitting

SHEET DESCRIPTION
178 KENNEBEC STREET
178 KENNEBEC STREET
PORTLAND, ME 04101
CONSTRUCTION MANAGEMENT PLAN

PREPARED FOR
MAINE WORKFORCE HOUSING, LLC
482 CONGRESS STREET, SUITE 203
PORTLAND, ME 04101

DATE:	3/16/2018
SCALE:	1" = 10'
DESIGNED:	ARF
JOB NO:	1747
FILE:	1747-B.DWG
SHEET	C-2.1

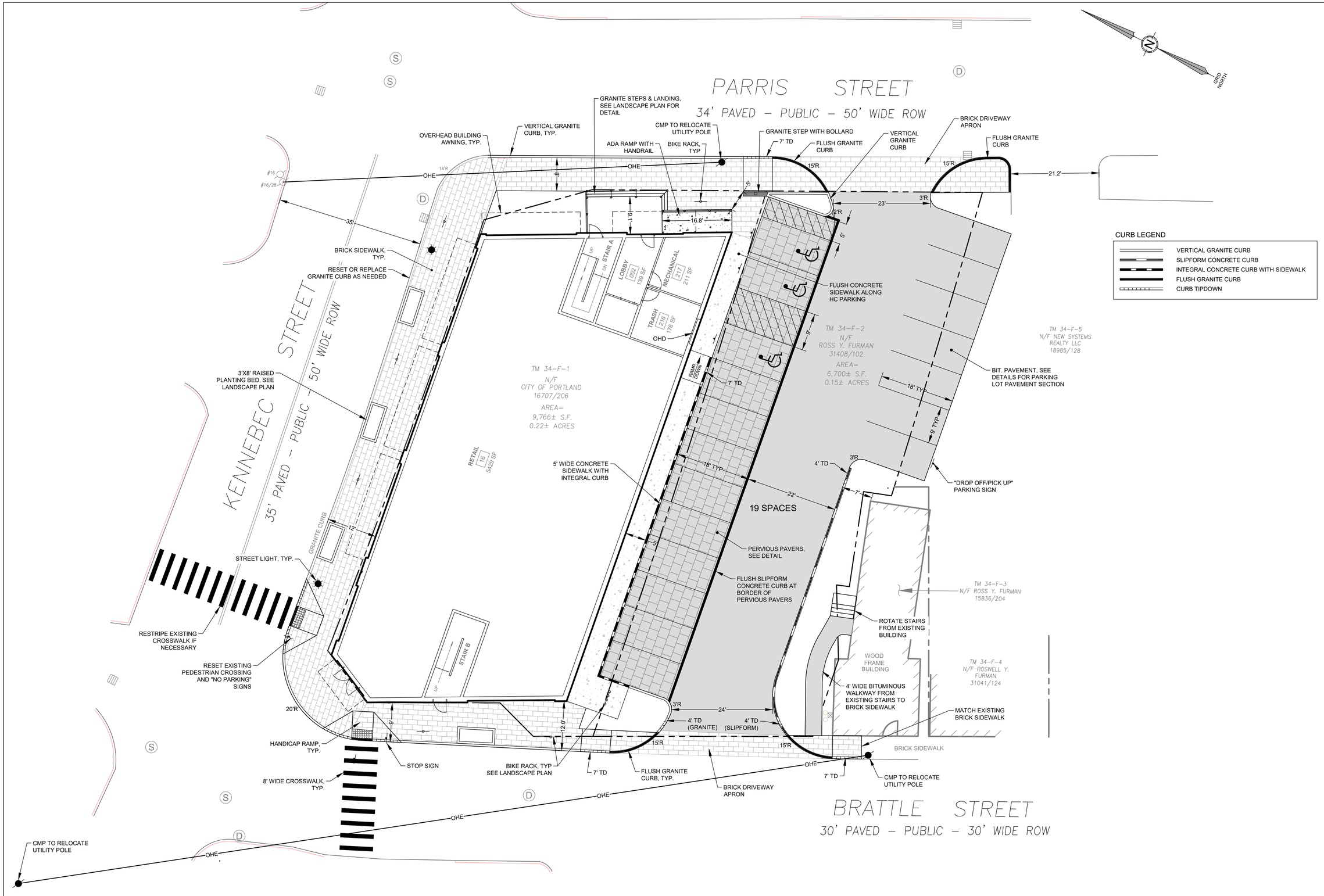

GRAPHIC SCALE

10 0 5 10 20 40

(IN FEET)
1 inch = 10 ft.

PRELIMINARY - NOT FOR CONSTRUCTION

STATE OF MAINE
MICHAEL E. TADEMA-WIELANDT
No. 10000
LICENSED
PROFESSIONAL ENGINEER

P.E.: MICHAEL E. TADEMA-WIELANDT
DATE: 3-28-2018

NO.	DATE	REVISIONS	APP'D BY
1	3-28-2018	SUBMITTED TO PLANNING BOARD FOR APPROVAL	MTW

Permitting

TERRADYN CONSULTANTS, LLC
CUMBERLAND HALL
41 AYLESWORTH DRIVE, SUITE 101
NEW GLOUCESTER, ME 04260
565 CONGRESS STREET
SUITE 203
PORTLAND, ME 04102
OFFICE: (207) 926-5111 FAX: (207) 221-1317
www.terradynconsultants.com
Civil Engineering - Land Planning - Stormwater Design - Environmental Permitting

SHEET DESCRIPTION
178 KENNEBEC STREET
178 KENNEBEC STREET
PORTLAND, ME 04101
SITE PLAN

PREPARED FOR
MAINE WORKFORCE HOUSING, LLC
482 CONGRESS STREET, SUITE 203
PORTLAND, ME 04101

DATE:	3/16/2018
SCALE:	1" = 10'
DESIGNED:	ARF
JOB NO:	1747
FILE:	1747-B.DWG
SHEET	C-3.0

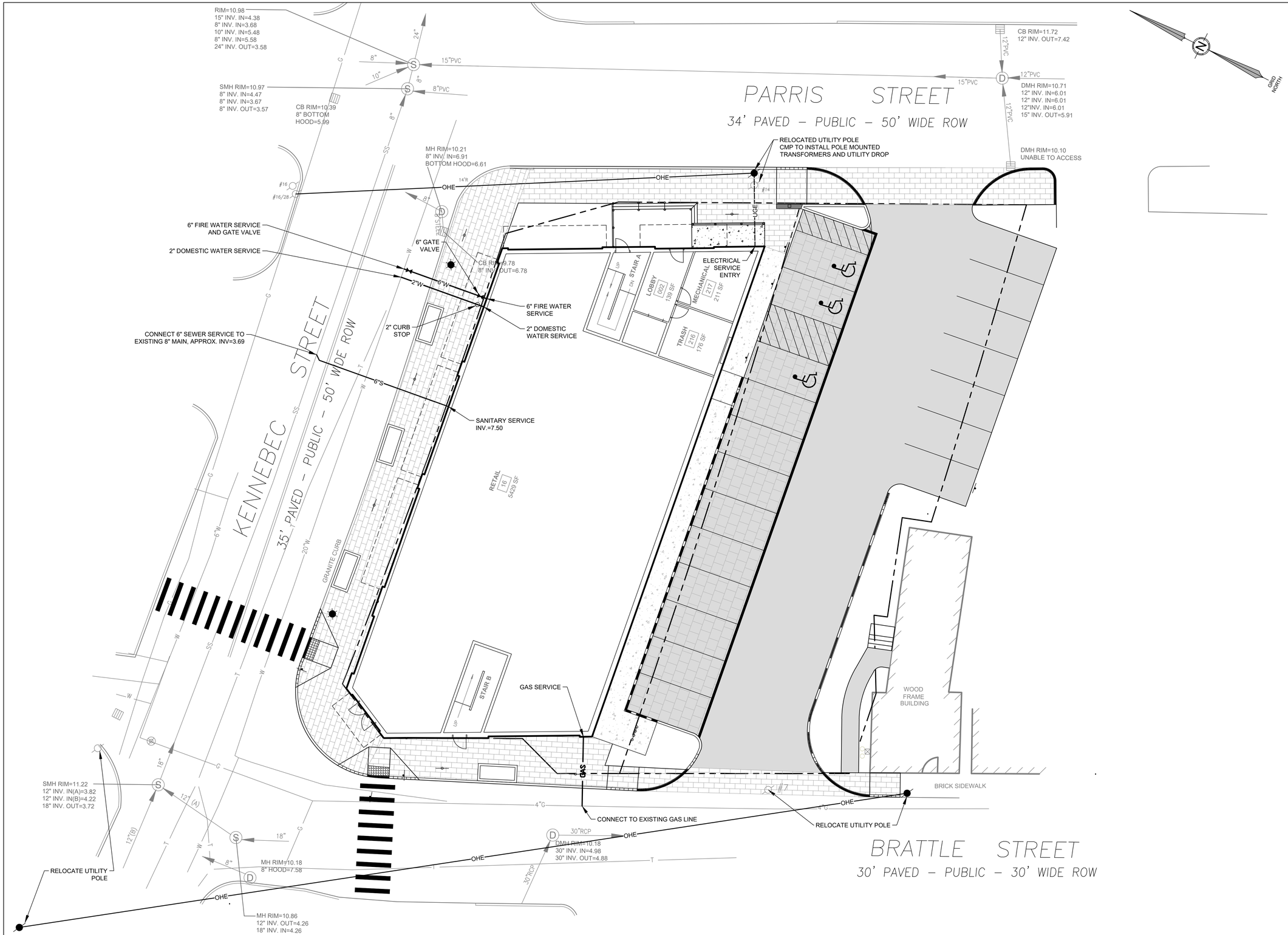

PRELIMINARY - NOT FOR CONSTRUCTION

GRAPHIC SCALE

10 0 5 10 20 40

(IN FEET)
1 inch = 10 ft.

STATE OF MAINE
MICHAEL E. TADEMA-WIELANDT
No. 13101
LICENSED
PROFESSIONAL ENGINEER

P.E.: MICHAEL E. TADEMA-WIELANDT
DATE: 3-28-2018

NO.	DATE	REVISIONS	BY	APP'D
1	3-28-2018	SUBMITTED TO PLANNING BOARD FOR APPROVAL	MTW	

TERRADYN CONSULTANTS, LLC
CUMBERLAND HALL
41 MIDDLE DRIVE, SUITE 101
NEW GLOUCESTER, ME 04260
565 CONGRESS STREET
SUITE 203
PORTLAND, ME 04102
OFFICE: (207) 926-5111 FAX: (207) 221-1317
www.terradynconsultants.com
Civil Engineering - Land Planning - Stormwater Design - Environmental Permitting

SHEET DESCRIPTION
178 KENNEBEC STREET
178 KENNEBEC STREET
PORTLAND, ME 04101
UTILITY PLAN

PREPARED FOR
MAINE WORKFORCE HOUSING, LLC
482 CONGRESS STREET, SUITE 203
PORTLAND, ME 04101

DATE:	3/16/2018
SCALE:	1" = 10'
DESIGNED:	ARF
JOB NO:	1747
FILE:	1747-B.DWG
SHEET	C-5.0

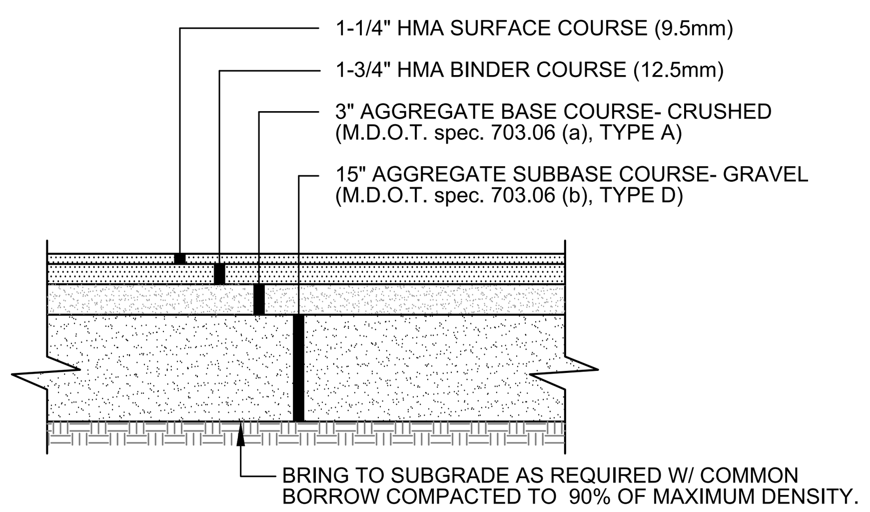

NOTES:

1. COMPACT GRAVEL SUBBASE COURSE TO 92% OF MAXIMUM DENSITY USING HEAVY ROLLER COMPACTION.
2. CONTRACTOR SHALL SET GRADE STAKES MARKING SUBBASE AND FINISH GRADE ELEVATIONS FOR CONSTRUCTION REFERENCE.

TYP. PAVED PARKING LOT SECTION

NOT TO SCALE

BRICKS TO BE USED:

NEW CONSTRUCTION:
4"X8" PINE HALL PATHWAY PAVER BRICK; MFG. BY PINE HALL BRICK CO., MADISON, NORTH CAROLINA. LACHANCE ITEM # 193623, PINE HALL PATHWAY PAVER BRICK.

REPAIR/MAINTENANCE TO EXISTING BRICK SIDEWALKS:
VERMONT PAVER; SUPPLIED BY GAGNE AND SONS. "VERMONT BACKER BRICK", ITEM: VBBB

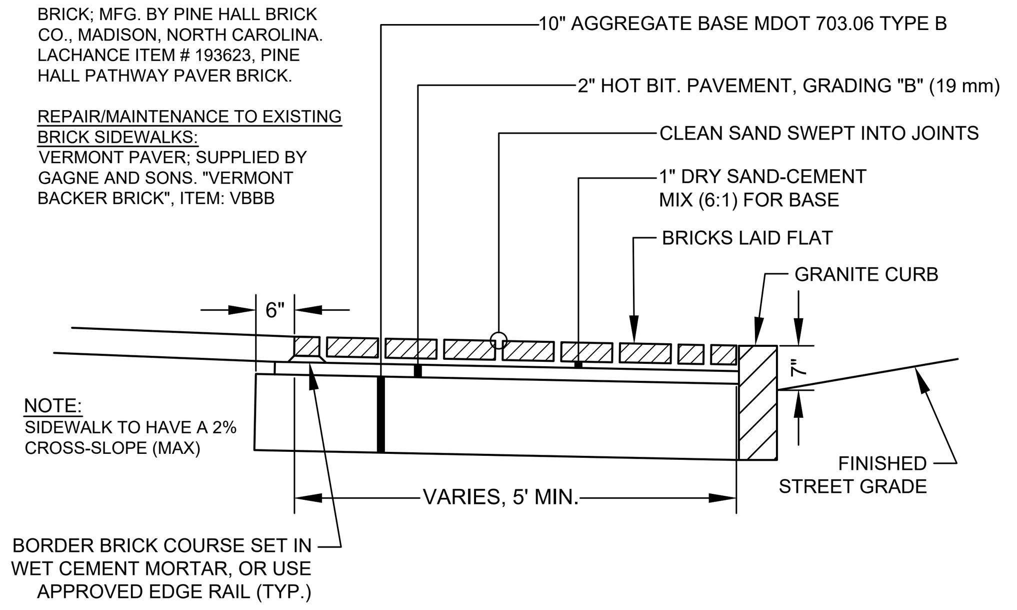

BRICK SIDEWALK WITH BITUMINOUS BASE

NOT TO SCALE

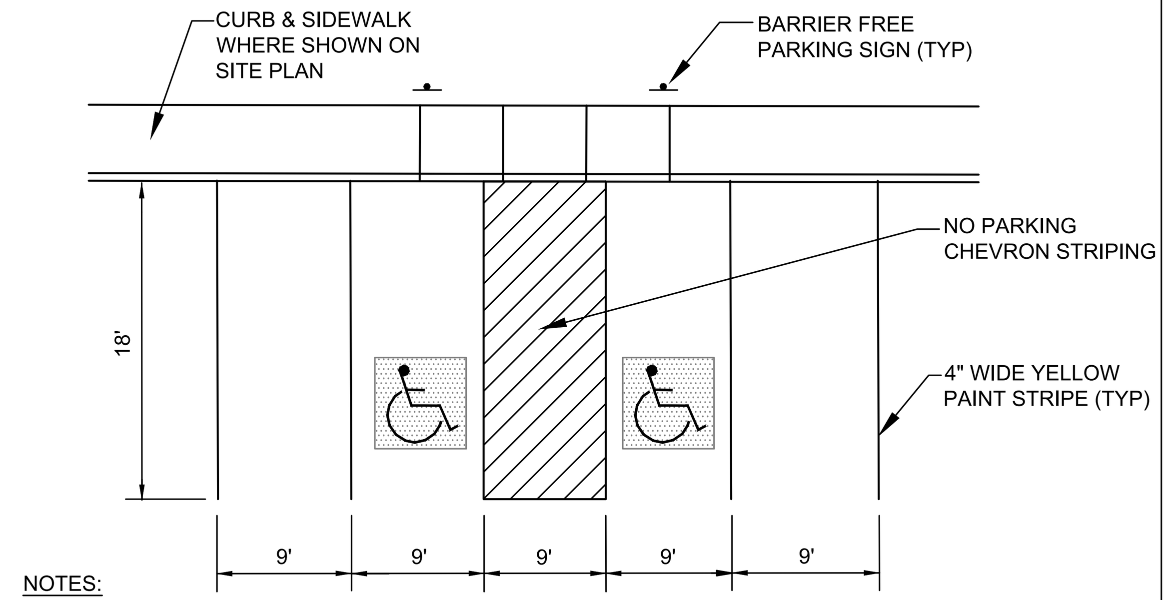

NOTES:

1. SEE SITE PLAN FOR NUMBER AND LOCATION OF BARRIER FREE PARKING SPACES.
2. BARRIER FREE GRAPHIC SYMBOL (PAINTED WHITE) TO BE CENTERED IN PARKING STALL. SYMBOL TO BE PAINTED ON BLUE NON-SKID BACKGROUND.

TYPICAL PARKING STALL DIMENSIONS

NOT TO SCALE

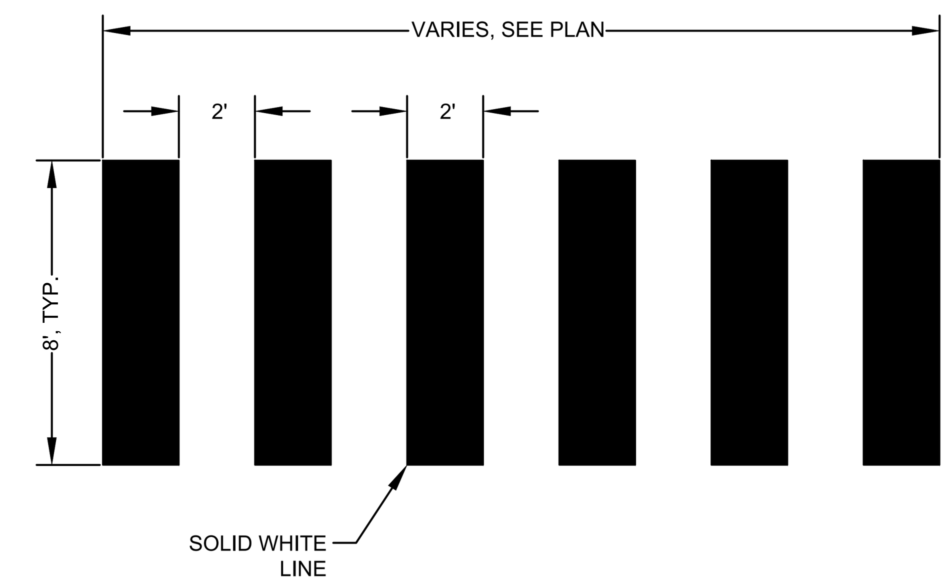

CROSSWALK STRIPING DETAIL

NOT TO SCALE

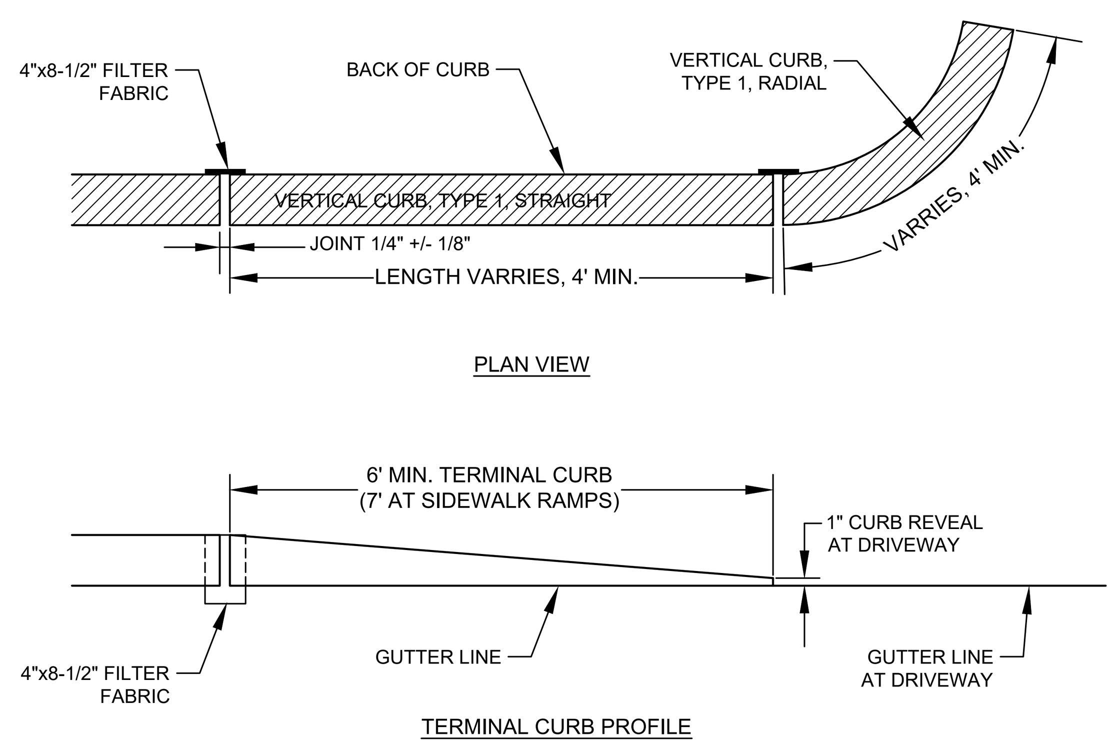

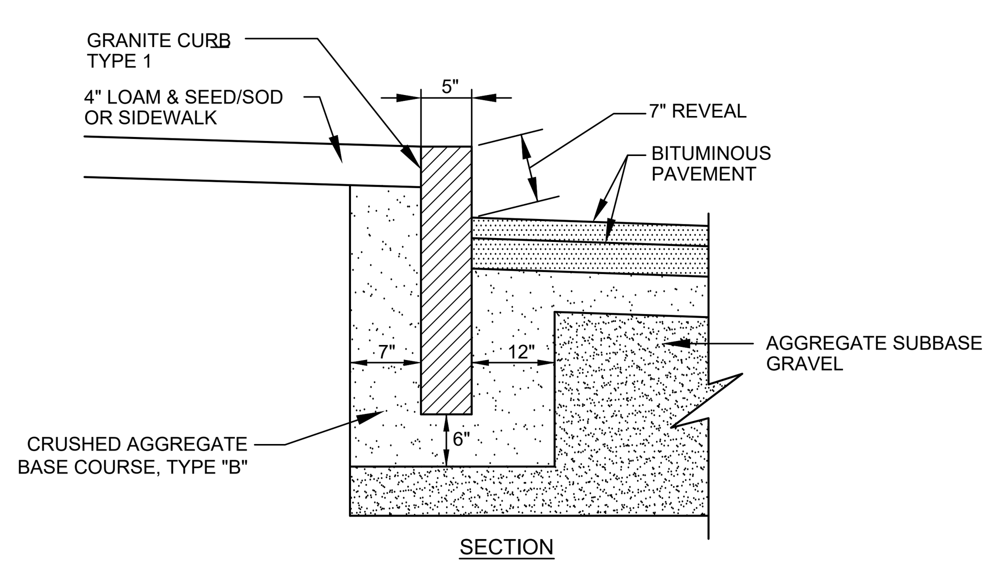

NOTES:

1. MIN. LENGTH OF STRAIGHT CURB STONES: 4', MAX. LENGTH: 8'
2. CIRCULAR CURB REQ. FOR RADIUS LESS THAN 50'
3. BASE GRAVEL SHALL BE COMPACTED TO A FIRM EVEN SURFACE PRIOR TO SETTING OF CURB.

VERTICAL GRANITE CURB

NOT TO SCALE

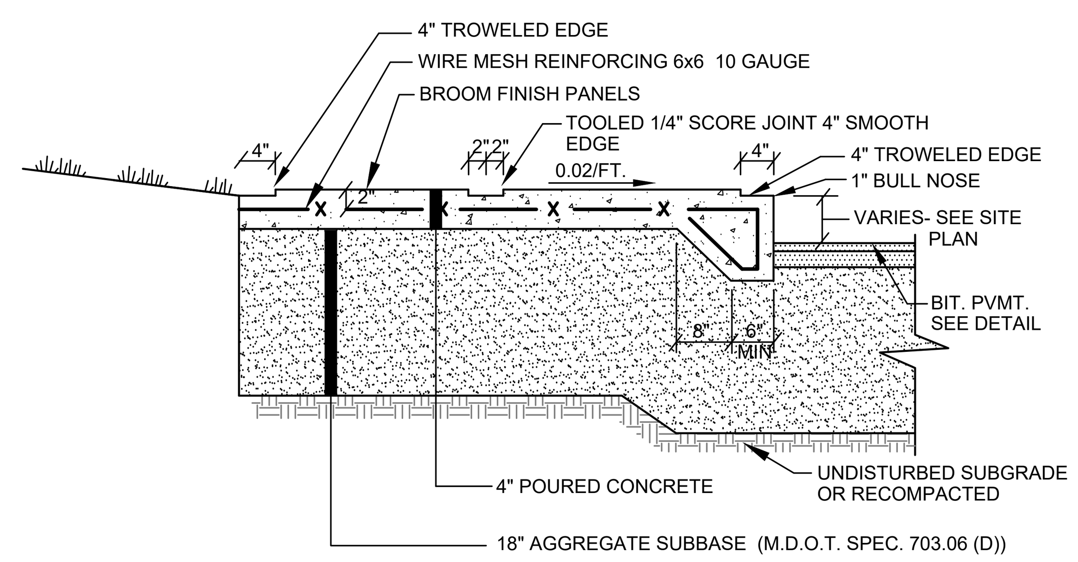

NOTE:
INSTALL 5'-0" SQUARE AREA BY 4' DEEP OF FROST-FREE MATERIAL BELOW ALL HANDICAP RAMPS AND ENTRY POINTS AT BUILDING.

CONCRETE SIDEWALK

NOT TO SCALE

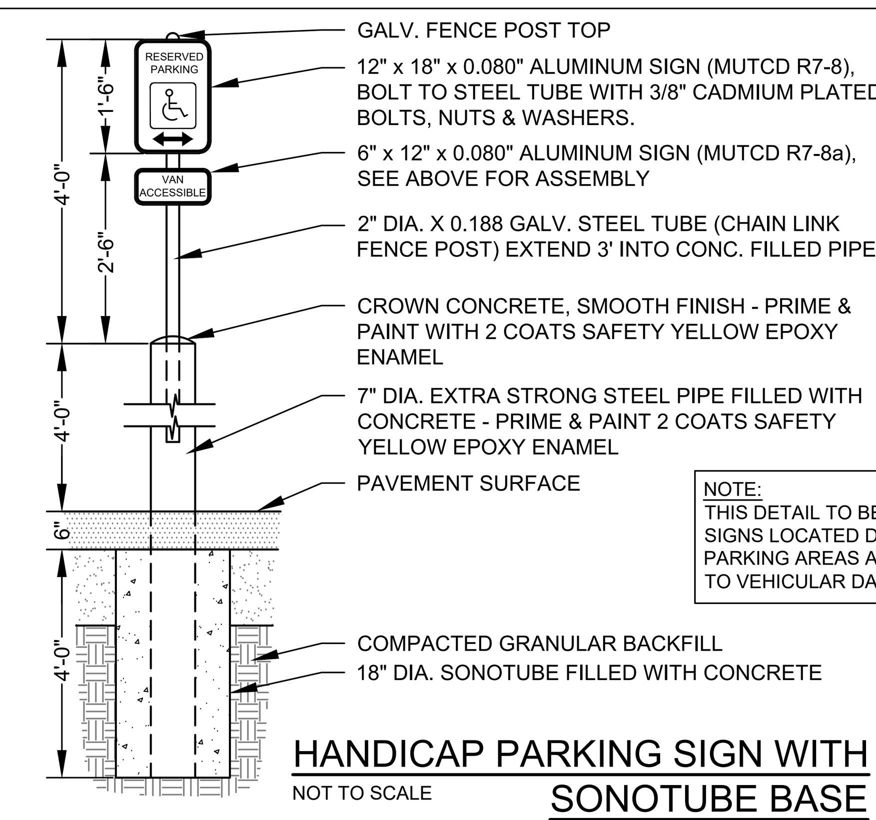

NOTE:
THIS DETAIL TO BE USED FOR SIGNS LOCATED DIRECTLY IN PARKING AREAS AND VULNERABLE TO VEHICULAR DAMAGE

HANDICAP PARKING SIGN WITH SONOTUBE BASE

NOT TO SCALE

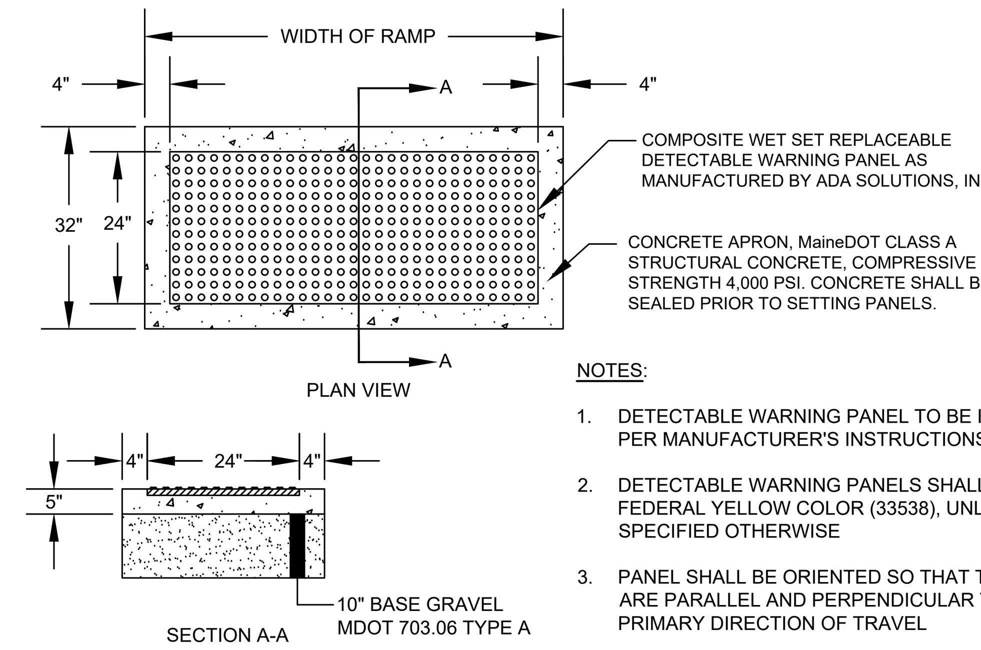

NOTES:

1. DETECTABLE WARNING PANEL TO BE INSTALLED PER MANUFACTURER'S INSTRUCTIONS
2. DETECTABLE WARNING PANELS SHALL BE FEDERAL YELLOW COLOR (33538), UNLESS SPECIFIED OTHERWISE
3. PANEL SHALL BE ORIENTED SO THAT THE DOMES ARE PARALLEL AND PERPENDICULAR TO THE PRIMARY DIRECTION OF TRAVEL

COMPOSITE DETECTABLE WARNING PANEL DETAIL

NOT TO SCALE

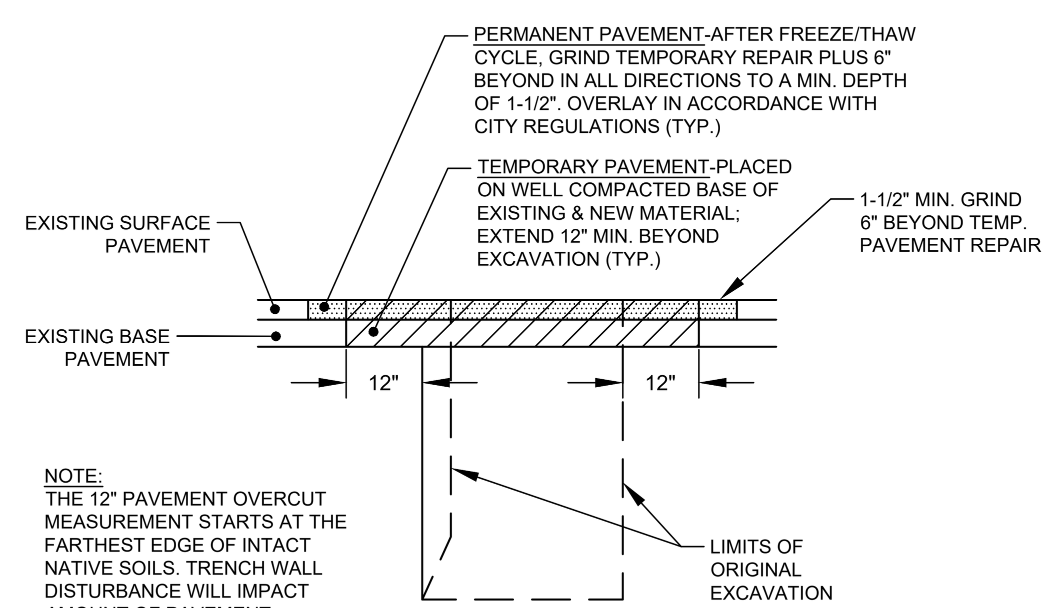

NOTE:
THE 12" PAVEMENT OVERCUT MEASUREMENT STARTS AT THE FARTHEST EDGE OF INTACT NATIVE SOILS. TRENCH WALL DISTURBANCE WILL IMPACT AMOUNT OF PAVEMENT REMOVAL REQUIRED

TYP. EXCAVATION IN CITY RIGHT OF WAY

NOT TO SCALE

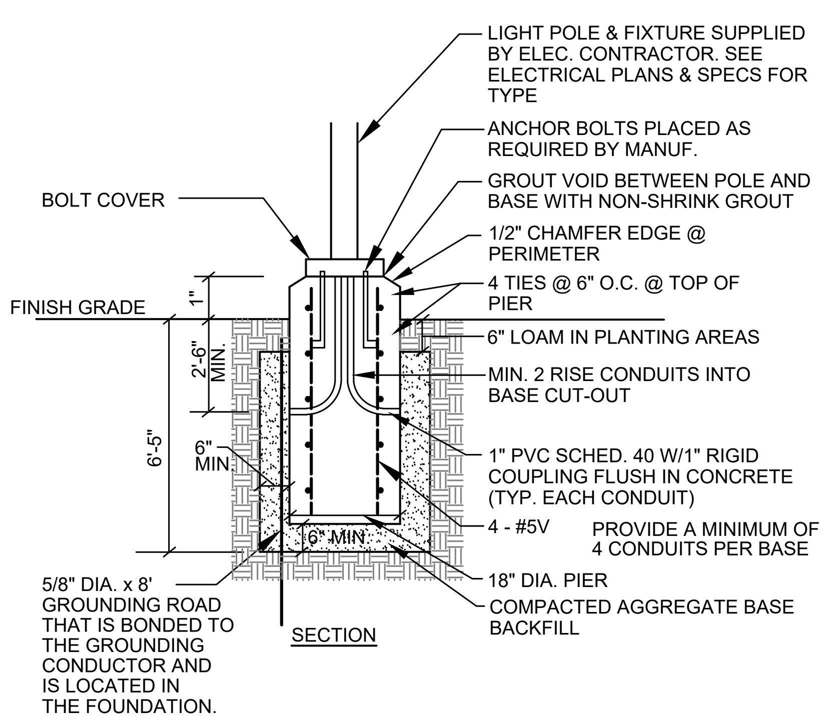

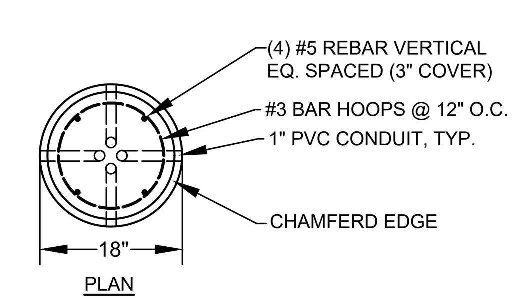

NOTES:

1. CONCRETE f'c=5,000 PSI @ 28 DAYS.
2. REINF. STEEL GRADE 60 NEW BARS.
3. CONCRETE 3/4" AGG., 6 +/- 1% ENTRAINED AIR.
4. PROVIDE 2 COATS BITUMINOUS DAMPROOFING FOR ALL CONCRETE BELOW GRADE.
5. EXPOSED CONCRETE TO BE PAINTED WITH 2 COATS OF ACRYLIC PAINT. COLOR TO MATCH POLE COLOR.
6. INSTALL BASE 3'-0" ABOVE FINISH GRADE IN LOCATIONS WHERE POLES ARE IN PARKING LOT PAVEMENT.

LIGHT POLE BASE

NOT TO SCALE

NOTES:

1. RAMPS SHALL BE CONSTRUCTED IN ACCORDANCE WITH THE AMERICANS WITH DISABILITIES ACT (ADA).
2. ALL RAMPS SHALL HAVE DETECTABLE WARNINGS THE FULL DEPTH AND WIDTH OF THE RAMP PER SECTION 4.29 OF THE ADA.
3. A TACTILE WARNING STRIP IS REQUIRED WHERE RAMP ABUTS AN AREA USED BY VEHICLES.

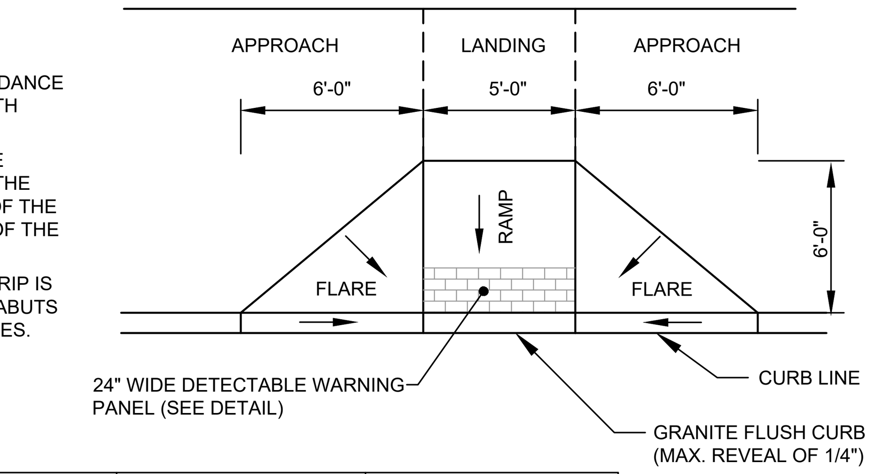

DESIGN ELEMENT	SLOPE IN DIRECTION OF TRAVEL	CROSS SLOPE
APPROACH	8.33% MAXIMUM	2%
LANDING	2%	2%
RAMP	8.33% MAXIMUM	MATCH STREET GRADE
FLARE	10% MAXIMUM AT CURB	-
SIDEWALK	MATCH STREET GRADE	2%

HANDICAP RAMP

NOT TO SCALE

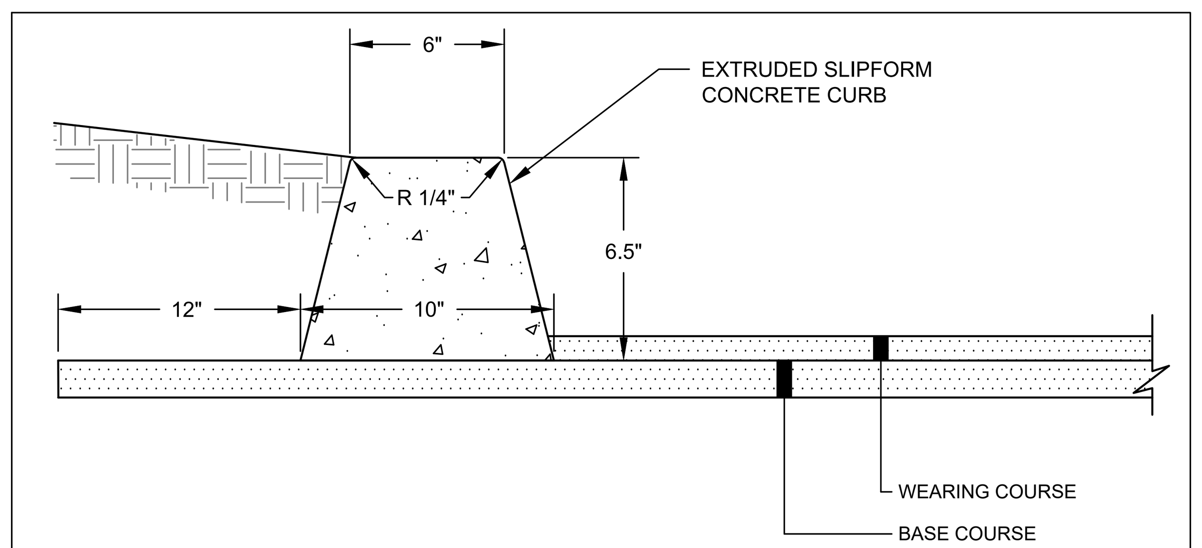

VERTICAL SLIPFORM CONCRETE CURB DETAIL

NOT TO SCALE

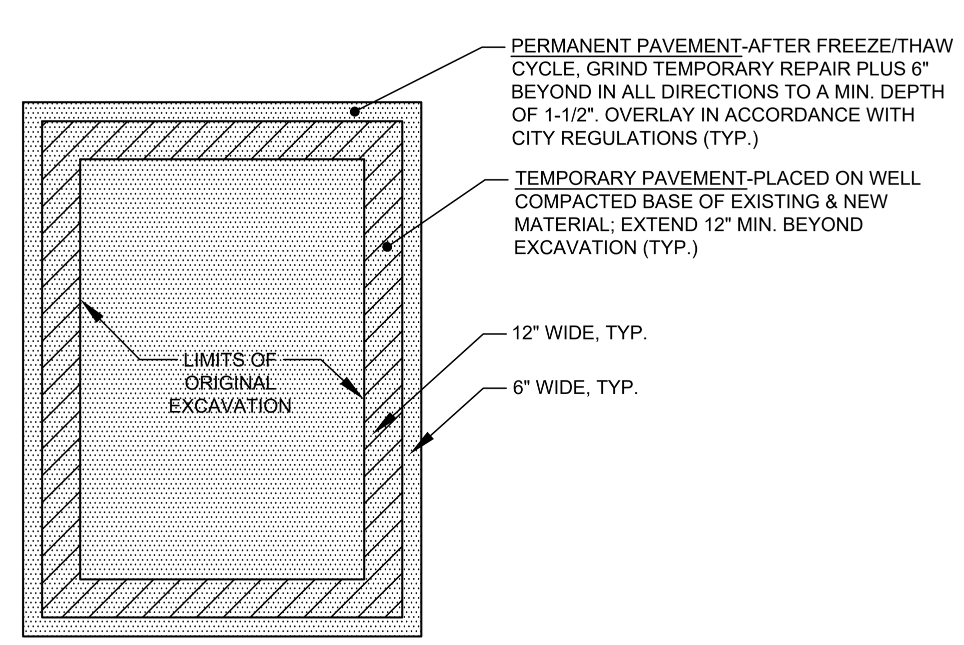

PLAN VIEW OF MINOR EXCAVATION PAVEMENT REPAIR

NOT TO SCALE

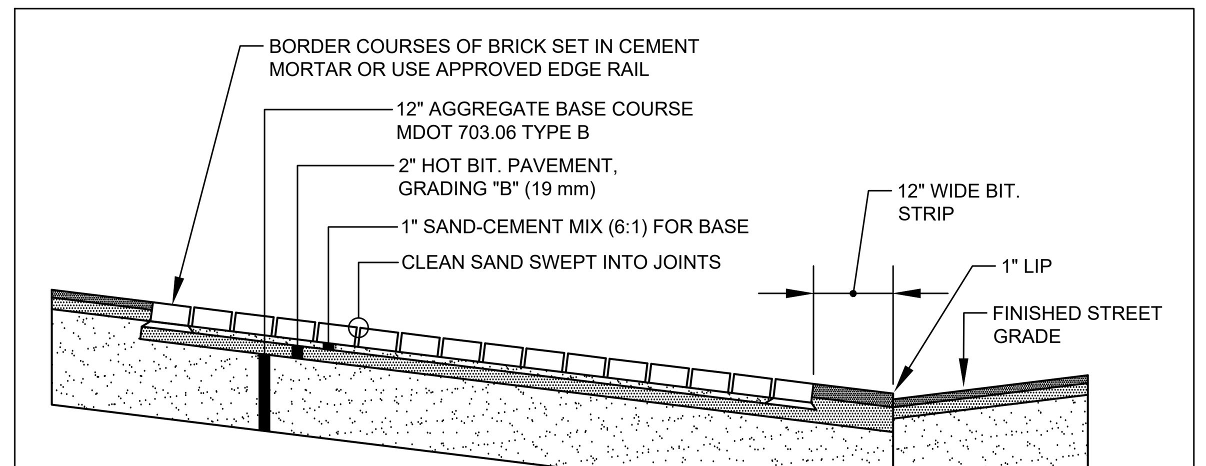

BRICKS TO BE USED:
NEW CONSTRUCTION:
4"X8" PINE HALL PATHWAY PAVER BRICK MFG. BY PINE HALL BRICK CO., MADISON, NC, LACHANCE ITEM # 193623

REPAIR/MAINTENANCE TO EXISTING:
VERMONT BACKER BRICK, SUPPLIED BY GAGNE & SONS, ITEM # VBBB

BRICK DRIVEWAY APRON

NOT TO SCALE

PRELIMINARY - NOT FOR CONSTRUCTION

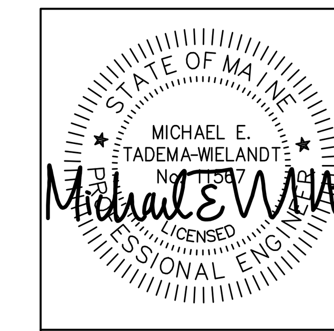

P.E.: MICHAEL E. TADEMA-WIELANDT
DATE: 3-28-2018

NO.	DATE	REVISIONS	APP'D BY
1	3-28-2018	SUBMITTED TO PLANNING BOARD FOR APPROVAL	MTW

TERRADYN CONSULTANTS, LLC
CUMBERLAND HALL
41 CAMPUS DRIVE, SUITE 101
NEW GLOUCESTER, ME 04260
565 CONGRESS STREET
SUITE 310
PORTLAND, ME 04102
OFFICE: (207) 926-5111 FAX: (207) 221-1317
www.terradynconsultants.com
Civil Engineering - Land Planning - Stormwater Design - Environmental Permitting

SHEET DESCRIPTION
178 KENNEBEC STREET
178 KENNEBEC STREET
PORTLAND, ME 04101
SITE DETAILS

PREPARED FOR
MAINE WORKFORCE HOUSING, LLC
482 CONGRESS STREET, SUITE 203
PORTLAND, ME 04101

DATE:	3/16/2018
SCALE:	N.T.S.
DESIGNED:	ARF
JOB NO:	1747
FILE: 1747-DETAILS.DWG	
SHEET	C-6.0

NOTES:

1. A FLEXIBLE PIPE TO MANHOLE CONNECTOR SHALL BE EMPLOYED IN THE CONNECTION OF ALL PIPE TO MANHOLE JUNCTIONS.

2. THE CONNECTOR SHALL BE KOR-N-SEAL AS MANUFACTURED BY NPC SYSTEMS, INC., OF MILFORD, NH OR EQUAL.

3. THE CONNECTOR SHALL BE THE SOLE ELEMENT RELIED ON TO ASSURE A FLEXIBLE WATERTIGHT SEAL OF THE PIPE TO MANHOLE, NO ADHESIVES OR LUPRICANTS SHALL BE EMPLOYED IN THE INSTALLATION OF THE CONNECTORS TO THE MANHOLE. THE RUBBER FOR THE CONNECTOR SHALL COMPLY TO ASTM C923 AND CONSIST OF EPDM AND ELASTOMERS KNOWN TO BE RESISTANT TO OZONE, WEATHER ELEMENTS, CHEMICALS, INCLUDING ACIDS, ALKALIS, ANIMAL AND VEGETABLE FATS, OILS AND PETROLEUM PROCUCTS FROM SPILLS.

4. ALL STAINLESS STEEL ELEMENTS OF THE CONNECTOR SHALL BE TOTALLY NON-MAGNETIC SERIES 304 STAINLESS, EXCLUDING THE WORM SCREW USED FOR TIGHTENING THE STEEL BAND SHALL BE TORQUED BY A BREAK-AWAY TORQUE WRENCH AVAILABLE FROM THE PRECAST MANHOLE SUPPLIER, AND SET AT 60/70 IN./LBS.

5. THE CONNECTOR SHALL BE INSTALLED IN THE MANHOLE WALL BY ACTIVATING THE EXPANDING MECHANISM IN STRICT ACCORDANCE WITH THE RECOMMENDATION OF THE CONNECTOR MANUFACTURER.

6. THE CONNECTOR SHALL BE OF A SIZE SPECIFICALLY DESIGNED FOR THE PIPE MATERIAL AND SIZE BEING UTILIZED ON THE PROJECT.

7. ALL CONNECTORS WHICH ARE CAPPED AWAITING PIPE INSTALLATION AT A LATER DATE MUST BE RESTRAINED.

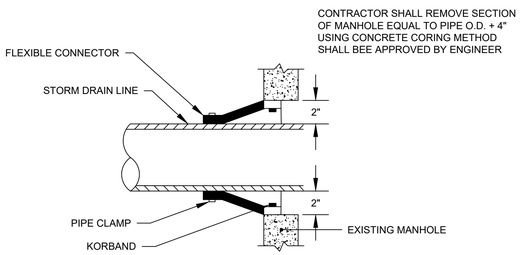

CORE AND SEAL CONNECTION TO EXISTING STORM DRAIN MANHOLE

NOT TO SCALE

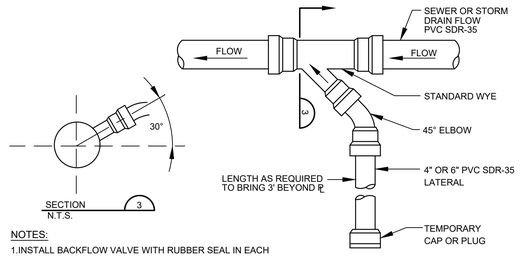

NOTES:

1.INSTALL BACKFLOW VALVE WITH RUBBER SEAL IN EACH FOUNDATION DRAIN SERVICE.

2. IF SUMP PUMP IS UTILIZED INSTALL CHECK VALVE AT SUMP PUMP.

SEWER / ROOF DRAIN SERVICE CONNECTION

NOT TO SCALE

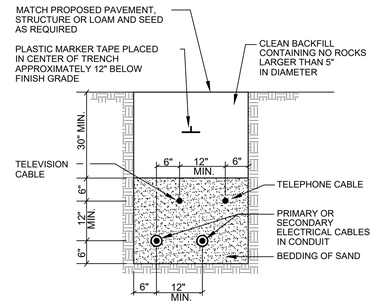

CABLES TO BE ENCASED IN SCHEDULE 40 PVC CONDUIT WHEN RUN BENEATH PAVED AREAS.

TYPICAL UNDERGROUND CABLE INSTALLATION

NOT TO SCALE

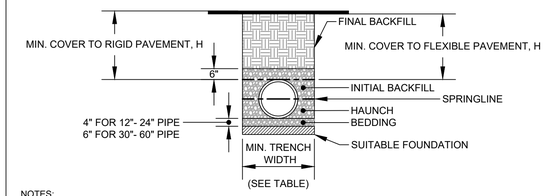

NOTES:

1. ALL PIPE SYSTEMS SHALL BE INSTALLED IN ACCORDANCE WITH ASTM D2321, "STANDARD PRACTICE FOR UNDERGROUND INSTALLATION OF THERMOPLASTIC PIPE FOR SEWERS AND OTHER GRAVITY FLOW APPLICATIONS", LATEST ADDITION

2. MEASURES SHOULD BE TAKEN TO PREVENT MIGRATION OF NATIVE FINES INTO BACKFILL MATERIAL, WHEN REQUIRED.

3. FOUNDATION: WHERE THE TRENCH BOTTOM IS UNSTABLE, THE CONTRACTOR SHALL EXCAVATE TO A DEPTH REQUIRED BY THE ENGINEER AND REPLACE WITH SUITABLE MATERIAL AS SPECIFIED BY THE ENGINEER. AS AN ALTERNATIVE AND AT THE DISCRETION OF THE DESIGN ENGINEER, THE TRENCH BOTTOM MAY BE STABILIZED USING A GEOTEXTILE MATERIAL.

4. BEDDING: SUITABLE MATERIAL SHALL BE CLASS I, II OR III. THE CONTRACTOR SHALL PROVIDE DOCUMENTATION FOR MATERIAL SPECIFICATION TO ENGINEER. UNLESS OTHERWISE NOTED BY THE ENGINEER, MINIMUM BEDDING THICKNESS SHALL BE 4" (100mm) FOR 4"-24" (100mm-600mm); 6" (150mm) FOR 30"-60" (750mm-900mm).

5. INITIAL BACKFILL: SUITABLE MATERIAL SHALL BE CLASS I, II OR III IN THE PIPE ZONE EXTENDING NOT LESS THAN 6" ABOVE CROWN OF PIPE. THE CONTRACTOR SHALL PROVIDE DOCUMENTATION FOR MATERIAL SPECIFICATION TO ENGINEER. MATERIAL SHALL BE INSTALLED AS REQUIRED IN ASTM D2321, LATEST EDITION.

6. MINIMUM COVER: MINIMUM COVER, H, IN NON-TRAFFIC APPLICATIONS (GRASS OR LANDSCAPE AREAS) IS 12" FROM THE TOP OF PIPE TO GROUND SURFACE. ADDITIONAL COVER MAY BE REQUIRED TO PREVENT FLOATION. FOR TRAFFIC APPLICATIONS, MINIMUM COVER, H, IS 12" UP TO 48" DIAMETER PIPE AND 24" OF COVER FOR 54"-60" DIAMETER PIPE, MEASURED FROM TOP OF PIPE TO BOTTOM OF FLEXIBLE PAVEMENT OR TO TOP OF RIGID PAVEMENT.

RECOMMENDED MINIMUM TRENCH WIDTHS

PIPE DIAM.	MIN. TRENCH WIDTH
4"	21"
6"	23"
8"	26"
10"	28"
12"	30"
15"	34"
18"	39"
24"	48"
30"	56"
36"	64"
42"	72"
48"	80"
54"	88"
60"	96"

MINIMUM RECOMMENDED COVER BASED ON VECHICLE LOADING CONDITIONS

	SURFACE LIVE LOADING CONDITION	
PIPE DIAM.	H-25	HEAVY CONSTRUCTION (75T AXLE LOAD) *
12" - 48"	12"	48"
54" - 60"	24"	60"

* VEHICLES IN EXCESS OF 75T MAY REQUIRE ADDITIONAL COVER

7. INSULATION: RIGID INSULATION SHALL BE PROVIDED FOR PIPES WITH LESS THAN 4' OF COVER IN ACCORDANCE WITH THE FOLLOWING TABLE:

COVER OVER PIPE	INSULATION THICKNESS
12" - 24"	3"
24" - 36"	2"
36" - 48"	1"
48"+	NONE

TYPICAL TRENCH DETAIL

NOT TO SCALE

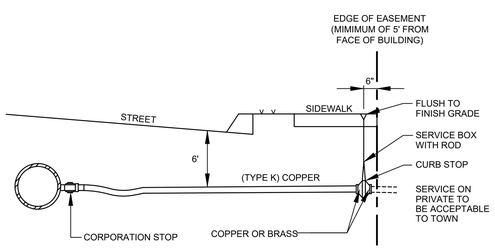

TYPICAL WATER SERVICE CONNECTION

NOT TO SCALE

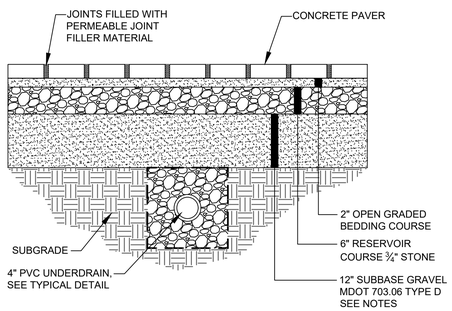

NOTES:
1. SEE PLAN FOR UNDERDRAIN LOCATIONS
2. SUBBASE GRAVEL SHALL CONTAIN BETWEEN 4% AND 7% FINES (PASSING #200 SIEVE)

PERMEABLE INTERLOCKING CONCRETE PAVER SECTION

NOT TO SCALE

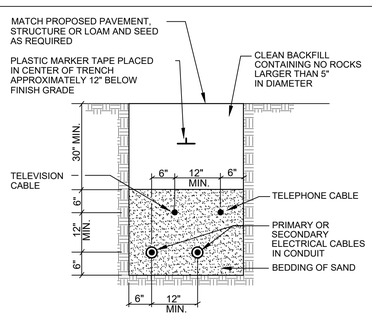

CABLES TO BE ENCASED IN SCHEDULE 40 PVC CONDUIT WHEN RUN BENEATH PAVED AREAS.

TYPICAL UNDERGROUND CABLE INSTALLATION

NOT TO SCALE

NOTES:

1. WEIGHT (APPROX):
   A) EMPTY W/CARTRIDGES: 200-LB MAX
   B) FULL OF WATER: 1500-LB MAX

2. MATERIAL:
   A) FILTER HOUSING AND COVER: STAINLESS STEEL, 300 SERIES
   B) CARTRIDGE PLATE: STAINLESS STEEL, 300 SERIES
   C) SUPPORT HARDWARE: CRES 300 SERIES OR EQUAL

3. PERFORMANCE CHARACTERISTICS (TYP):
   A) DEBRIS CAPACITY: 5.0 CU-FT
   B) FILTERED FLOW RATE:
      0.26 CFS PER CARTRIDGE (FABCO STANDARD CARTRIDGE)
      THIS UNIT CONTAINS TWO (2) CARTRIDGES.
   C) BYPASS FLOW RATE: 460 GPM (1.0 CFS)

4. TYPICAL INSTALLATION: CUT DOWNSPOUT PIPE AND CONNECT THE 4" INLET AND OUTLET PIPES AS REQUIRED TO REDIRECT RAIN FLOW THROUGH THE FILTER BOX.

5. USE ONLY WITH FABCO REPLACEABLE MEDIA CARTRIDGES.

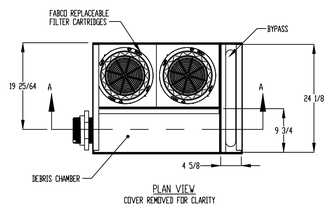

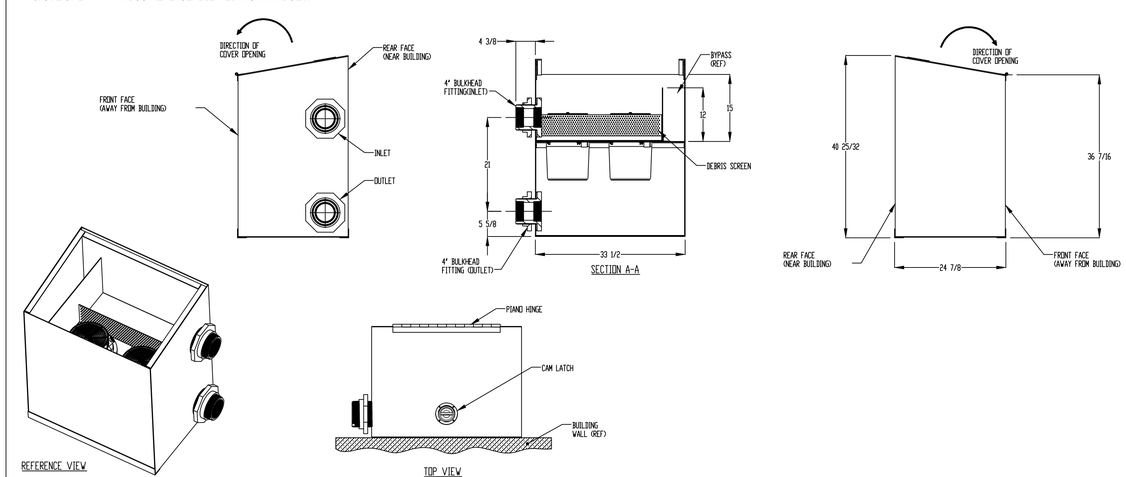

ROOF RUNOFF DOWNSPOUT FILTER UNIT

NOT TO SCALE

PRELIMINARY - NOT FOR CONSTRUCTION

STATE OF MAINE
MICHAEL E. TADEMA-WIELANDT
No. 7000
LICENSED
PROFESSIONAL ENGINEER

P.E.: MICHAEL E. TADEMA-WIELANDT
DATE: 3-28-2018

NO.	DATE	REVISIONS	APP'D BY
1	3-28-2018	SUBMITTED TO PLANNING BOARD FOR APPROVAL	MTW

TERRADYN CONSULTANTS, LLC
Civil Engineering - Land Planning - Stormwater Design - Environmental Permitting
CUMBERLAND HALL
41 CHASE DRIVE - SUITE 101
NEW GLOUCESTER, ME 04260
OFFICE: (207) 926-5111
www.terradynconsultants.com
565 CONGRESS STREET
SUITE 310
PORTLAND, ME 04102
FAX: (207) 221-1317

SHEET DESCRIPTION
178 KENNEBEC STREET
178 KENNEBEC STREET
PORTLAND, ME 04101
UTILITY & DRAINAGE DETAILS

PREPARED FOR
MAINE WORKFORCE HOUSING, LLC
482 CONGRESS STREET, SUITE 203
PORTLAND, ME 04101

DATE:	3/16/2018
SCALE:	N.T.S.
DESIGNED:	ARF
JOB NO:	1747
FILE: 1747-DETAILS.DWG	
SHEET	C-6.1

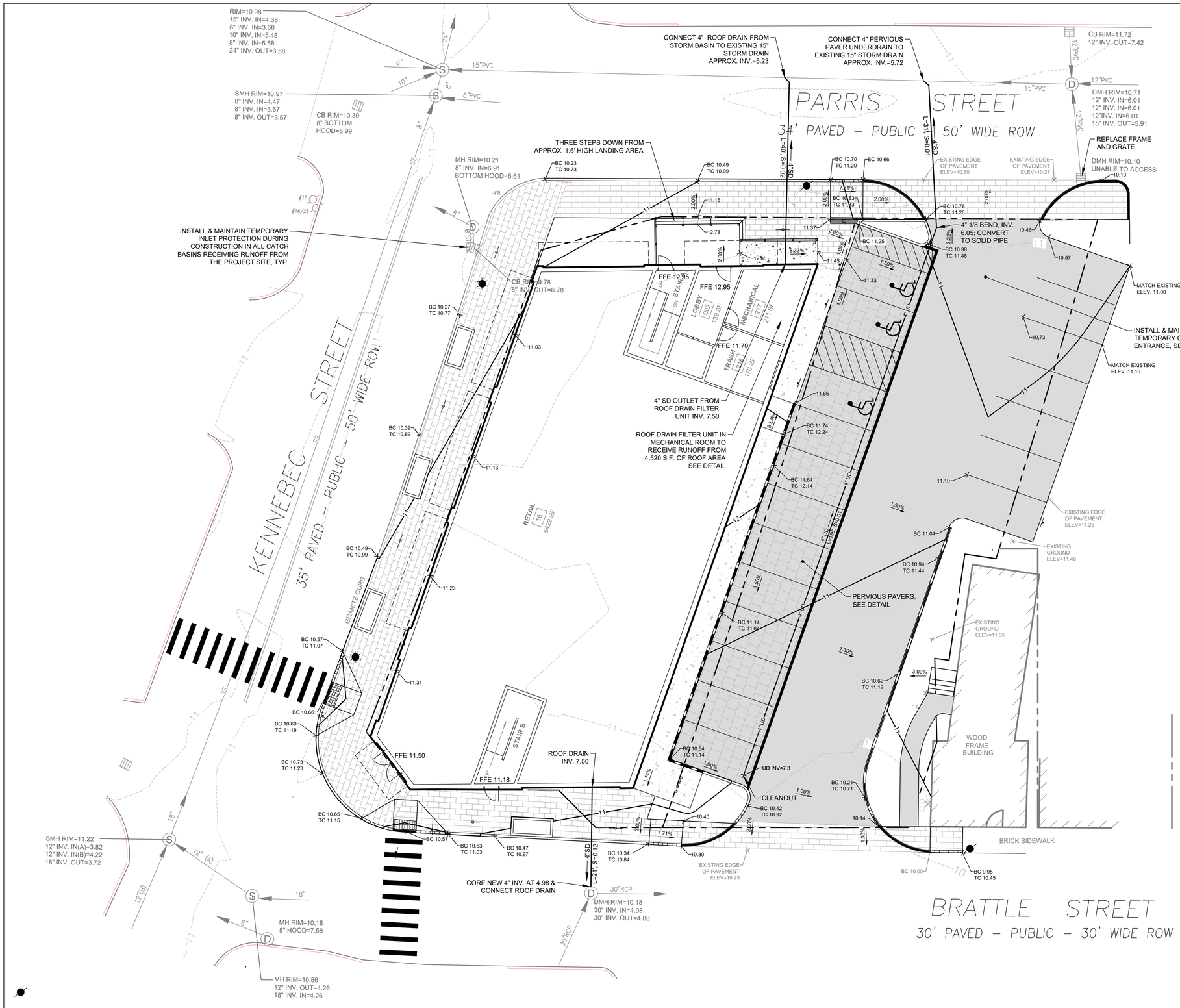

GRAPHIC SCALE

(IN FEET)
1 inch = 10 ft.

PRELIMINARY - NOT FOR CONSTRUCTION

STATE OF MAINE
MICHAEL E. TADEMA-WIELANDT
No. 13133
LICENSED
PROFESSIONAL ENGINEER

P.E.: MICHAEL E. TADEMA-WIELANDT
DATE: 3-28-2018

NO.	DATE	REVISIONS	MTW APP'D BY
1	3-28-2018	SUBMITTED TO PLANNING BOARD FOR APPROVAL	

Permitting

TERRADYN CONSULTANTS, LLC
CUMBERLAND HALL
41 CHAMBERLAIN AVE
NEW GLOUCESTER, ME 04260
565 CONGRESS STREET
SUITE 210
PORTLAND, ME 04102
OFFICE: (207) 926-5111 FAX: (207) 221-1317
www.terradynconsultants.com
Civil Engineering - Land Planning - Stormwater Design - Environmental Permitting

SHEET DESCRIPTION
178 KENNEBEC STREET
178 KENNEBEC STREET
PORTLAND, ME 04101
GRADING, DRAINAGE & EROSION PLAN

PREPARED FOR
MAINE WORKFORCE HOUSING, LLC
482 CONGRESS STREET, SUITE 203
PORTLAND, ME 04101

DATE:	3/16/2018
SCALE:	1" = 10'
DESIGNED:	ARF
JOB NO:	1747
FILE:	1747-B.DWG
SHEET	C-4.0

EROSION AND SEDIMENT CONTROL PLAN

Pre-Construction Phase
A person who conducts, or causes to be conducted, an activity that involves filling, displacing or exposing soil or other earthen materials shall take measures to prevent unreasonable erosion of soil or sediment beyond the project site or into a protected natural resource as defined in 38 mrsa § 480-b. Erosion control measures must be in place before the activity begins. Measures must remain in place and functional until the site is permanently stabilized. Adequate and timely temporary and permanent stabilization measures must be taken. The site must be maintained to prevent unreasonable erosion and sedimentation. Minimize disturbed areas and protect natural downgradient buffer areas to the extent practicable.

BMP Construction Phase
A. Sediment barriers. Prior to the beginning of any construction, properly install sediment barriers at the edge of any downgradient disturbed area and adjacent to any drainage channels within the proposed disturbed area. Maintain the sediment barriers until the disturbed area is permanently stabilized.

B. Construction entrance: Prior to any clearing or grubbing, a construction entrance shall be constructed at the intersection with the proposed access drive and the existing roadway to avoid tracking of mud, dust and debris from the site.

C. Riprap: Since riprap is used where erosion potential is high, construction must be sequenced so that the riprap is put in place with the minimum delay. Disturbance of areas where riprap is to be placed should be undertaken only when final preparation and placement of the riprap can follow immediately behind the initial disturbance. Where riprap is used for outlet protection, the riprap should be placed before or in conjunction with the construction of the pipe or channel so that it is in place when the pipe or channel begins to operate. Maintain temporary riprap, such as temporary check dams until the disturbed area is permanently stabilized.

D. Temporary stabilization. Stabilize with temporary seeding, mulch, or other non-erodable cover any exposed soils that will remain unworked for more than 14 days except, stabilize areas within 100 feet of a wetland or waterbody within 7 days or prior to a predicted storm event, whichever comes first. If hay or straw mulch is used, the application rate must be 2 bales (70-90 pounds) per 1000 sf or 1.5 to 2 tons (90-100 bales) per acre to cover 75 to 90% of the ground surface. Hay mulch must be kept moist or anchored to prevent wind blowing. An erosion control blanket or mat shall be used at the base of grassed waterways, steep slopes (15% or greater) and on any disturbed soil within 100 feet of lakes, streams and wetlands. Grading shall be planned so as to minimize the length of time between initial soil exposure and final grading. On large projects this should be accomplished by phasing the operation and completing the first phase up to final grading and seeding before starting the second phase, and so on.

E. Vegetated waterway. Upon final grading, the disturbed areas shall be immediately seeded to permanent vegetation and mulched and will not be used as outlets until a dense, vigorous vegetative cover has been obtained. Once soil is exposed for waterway construction, it should be immediately shaped, graded and stabilized. Vegetated waterways need to be stabilized early during the growing season (prior to september 15). If final seeding of waterways is delayed past september 15, emergency provisions such as sod or riprap may be required to stabilize the channel. Waterways should be fully stabilized prior to directing runoff to them.

Permanent stabilization defined
A. Seeded areas. For seeded areas, permanent stabilization means an 90% cover of the disturbed area with mature, healthy plants with no evidence of washing or rilling of the topsoil.

B. Sodded areas. For sodded areas, permanent stabilization means the complete binding of the sod roots into the underlying soil with no slumping of the sod or die-off.

C. Permanent mulch. For mulched areas, permanent mulching means total coverage of the exposed area with an approved mulch material. Erosion control mix may be used as mulch for permanent stabilization according to the approved application rates and limitations.

D. Riprap. For areas stabilized with riprap, permanent stabilization means that slopes stabilized with riprap have an appropriate backing of a well-graded gravel or approved geotextile to prevent soil movement from behind the riprap. Stone must be sized appropriately. It is recommended that angular stone be used.

E. Agricultural use. For construction projects on land used for agricultural purposes (e.G., pipelines across crop land), permanent stabilization may be accomplished by returning the disturbed land to agricultural use.

F. Paved areas. For paved areas, permanent stabilization means the placement of the compacted gravel subbase is completed.

G. Ditches, channels, and swales. For open channels, permanent stabilization means the channel is stabilized with mature vegetation at least three inches in height, with well-graded riprap, or with another non-erosive lining capable of withstanding the anticipated flow velocities and flow depths without reliance on check dams to slow flow. There must be no evidence of slumping of the lining, undercutting of the banks, or down-cutting of the channel.

General Construction Phase
The following erosion control measures shall be followed by the contractor throughout construction of this project:

A. All topsoil shall be collected, stockpiled, seeded with rye at 3 pounds/1,000 sf and mulched, and reused as required. Silt fencing shall be placed down gradient from the stockpiled loam. Stockpile to be located by designation of the owner and inspecting engineer.

B. The inspecting engineer at his/her discretion, may require additional erosion control measures and/or supplemental vegetative provisions to maintain stability of earthworks and finish graded areas. The contractor shall be responsible for providing and installing any supplemental measures as directed by the inspecting engineer. Failure to comply with the engineer's directions will result in discontinuation of construction activities.

C. Erosion control mesh shall be applied in accordance with the plans over all finish seeded areas as specified on the design plans.

D. All graded or disturbed areas including slopes shall be protected during clearing and construction in accordance with the approved erosion and sediment control plan until they are adequately stabilized.

E. All erosion, and sediment control practices and measures shall be constructed, applied and maintained in accordance with the approved erosion and sediment control plan.

F. Areas to be filled shall be cleared, grubbed and stripped of topsoil to remove trees, vegetation, roots or other objectionable materials.

G. Areas shall be scarified to a minimum depth of 3 inches prior to placement of topsoil.

H. All fills shall be compacted as required to reduce erosion, slippage, settlement, subsidence or other related problems. Fill intended to support buildings, structures and conduits, etc., shall be compacted in accordance with local requirements or codes.

I. All fills shall be placed and compacted in layers not to exceed 8 inches in thickness.

J. Except for approved landfills or non-structural fills, fill material shall be free of brush, rubbish, rocks, logs, stumps, building debris and other objectionable materials that would interfere with or prevent construction of satisfactory lifts.

K. Frozen material or soft, mucky or highly compressible materials shall not be incorporated into fill slopes or structural fills.

L. Fill shall not be placed on a frozen foundation.

M. Seeps or springs encountered during construction shall be handled appropriately.

N. All graded areas shall be permanently stabilized immediately following finished grading.

O. Remove any temporary control measures, such as silt fence, within 30 days after permanent stabilization is attained. Remove any accumulated sediments and stabilize.

Permanent vegetation
Permanent vegetative cover should be established on disturbed areas where permanent, long lived vegetative cover is needed to stabilize the soil, to reduce damages from sediment and runoff, and to enhance the environment.

Seedbed preparation
A. Grade as feasible to permit the use of conventional equipment for seedbed preparation, seeding, mulch application and anchoring, and maintenance.

B. Apply limestone and fertilizer according to soil tests such as those offered by the university of maine soil testing laboratory. Soil sample mailers are available from the local cooperative extension service office. If soil testing is not feasible on small or variable sites, or where timing is critical, fertilizer may be applied at the rate of 800 pounds per acre or 18.4 pounds per 1,000 square feet using 10-20-20 (n-p2o5-k2o) or equivalent. Apply ground limestone (equivalent to 50% calcium plus magnesium oxide) at a rate of 3 tons per acre (138 lb. Per 1,000 sq. Ft).

C. Work lime and fertilizer into the soil as nearly as practical to a depth of 4 inches with a disc, spring tooth harrow or other suitable equipment. The final harrowing operation should be on the general contour. Continue tillage until a reasonably uniform, fine seedbed is prepared. All but clay or silty soils and coarse sands should be rolled to firm the seedbed wherever feasible.D. Remove from the surface all stones 2 inches or larger in any dimension. Remove all other debris, such as wire, cable, tree roots, concrete, clods, lumps or other unsuitable material.

E. Inspect seedbed just before seeding. If traffic has left the soil compacted; the area must be tilled and firmed as above.

F. Permanent seeding should be made 45 days prior to the first killing frost or as a dormant seeding with mulch after the first killing frost and before snowfall. When crown vetch is seeded in later summer, at least 35% of the seed should be hard seed (unscarified). If seeding cannot be done within the seeding dates, mulch according to the temporary mulching bmp and overwinter stabilization and construction to protect the site and delay seeding until the next recommended seeding period.

G. Following seed bed prepartation, swale areas, fill areas and back slopes shall be seeded at a rate of 3 lbs./1,000 s.F. With a mixture of 35% creeping red h. Fescue, 6% red top, 24% kentucky bluegrass, 10% perennial ryegrass, 20% annual ryegrass and 5% white dutch clover.

I. Areas which have been temporarily or permanently seeded shall be mulched immediately following seeding.

J. Areas which cannot be seeded within the growing season shall be mulched for over-winter protection and the area should be seeded at the beginning of the growing season.

Winter construction phase
If an area is not stabilized with temporary or permanent measures by november 15, then the site must be protected with additional stabilization measures.

A. Permanent stabilization consists of at least 90% vegetation, pavement/gravel base or riprap.

B. Do not expose slopes or leave slopes exposed over the winter or for any other extended time of work suspension unless fully protected with mulch.

C. Apply hay mulch at twice the standard rate (150 lbs. Per 1,000 sf). The mulch must be thick enough such that the ground surface will not be visible and must be anchored.

D. Use mulch and mulch netting or an erosion control mulch blanket or all slopes greater than 8 % or other areas exposed to direct wind.

E. Install an erosion control blanket in all drainageways (bottom and sides) with a slope greater than 3 %.

F. See the vegetation measures for more information on seeding dates and types.

G. Winter excavation and earthwork shall be completed so that no more than 1 acre of the site is without stabilization at any one time.

H. An area within 100 feet of a protected natural resource must be protected with a double row of sediment barrier.

I. Temporary mulch must be applied within 7 days of soil exposure or prior to any storm event, but after every workday in areas within 100 feet from a protected natural resource.

J. Areas that have been brought to final grade must be permanently mulched that same day.

K. If snowfall is greater than 1 inch (fresh or cumulative), the snow shall be removed from the areas due to be seeded and mulched.

L. Loam shall be free of frozen clumps before it is applied.

M. All vegetated ditch lines that have not been stabilized by november 1, or will be worked during the winter construction period, must be stabilized with an appropriate stone lining backed by an appropriate gravel bed or geotextile unless specifically released from this standard by the department.

Maintenance and inspection phase
A. Minimum erosion control measures will need to be implemented and the applicant will be responsible to maintain all components of the erosion control plan until the site is fully stabilized. However, based on site and weather conditions during construction, additional erosion control measures may need to be implemented. All areas of instability and erosion must be repaired immediately during construction and need to be maintained until the site is fully stabilized or vegetation is established. A construction log must be maintained for the erosion and sedimentation control inspections and maintenance

B. A log (report) must be kept summarizing the scope of the inspection, name(s) and qualifications of the personnel making the inspection, the date(s) of the inspection, and major observations relating to operation of erosion and sedimentation controls and pollution prevention measures. Major observations must include: bmps that need to be maintained; location(s) of bmps that failed to operate as designed or proved inadequate for a particular location; and location(s) where additional bmps are needed that did not exist at the time of inspection. Follow-up to correct deficiencies or enhance controls must also be indicated in the log and dated, including what action was taken and when.

Dewatering
A dewatering plan is needed to address excavation de-watering following heavy rainfall events or where the excavation may intercept the groundwater table during construction. The collected water needs treatment and a discharge point that will not cause downgradient erosion and offsite sedimentation or within a resource. Please follow the details of such a plan.

Housekeeping

1. Spill prevention. Controls must be used to prevent pollutants from construction and waste materials stored on site to enter stormwater, which includes storage practices to minimize exposure of the materials to stormwater. The site contractor or operator must develop, and implement as necessary, appropriate spill prevention, containment, and response planning measures.

   NOTE: Any spill or release of toxic or hazardous substances must be reported to the Department. For oil spills, call 1-800-482-0777 which is available 24 hours a day. For spills of toxic or hazardous material, call 1-800-452-4664 which is available 24 hours a day. For more information, visit the Department's website at : http://www.maine.gov/dep/spills/emergspillresp/

2. Groundwater protection. During construction, liquid petroleum products and other hazardous materials with the potential to contaminate groundwater may not be stored or handled in areas of the site draining to an infiltration area. An "infiltration area" is any area of the site that by design or as a result of soils, topography and other relevant factors accumulates runoff that infiltrates into the soil. Dikes, berms, sumps, and other forms of secondary containment that prevent discharge to groundwater may be used to isolate portions of the site for the purposes of storage and handling of these materials.

3. Fugitive sediment and dust. Actions must be taken to ensure that activities do not result in noticeable erosion of soils or fugitive dust emissions during or after construction. Oil may not be used for dust control, but other water additives may be considered as needed. A stabilized construction entrance (SCE) should be included to minimize tracking of mud and sediment. If off-site tracking occurs, public roads should be swept immediately and no less than once a week and prior to significant storm events. Operations during dry months, that experience fugitive dust problems, should wet down unpaved access roads once a week or more frequently as needed with a water additive to suppress fugitive sediment and dust.

4. Debris and other materials. Minimize the exposure of construction debris, building and landscaping materials, trash, fertilizers, pesticides, herbicides, detergents, sanitary waste and other materials to precipitation and stormwater runoff. These materials must be prevented from becoming a pollutant source.

   NOTE: To prevent these materials from becoming a source of pollutants, construction and post-construction activities related to a project may be required to comply with applicable provision of rules related to solid, universal, and hazardous waste, including, but not limited to, the Maine solid waste and hazardous waste management rules; Maine hazardous waste management rules; Maine oil conveyance and storage rules; and Maine pesticide requirements.

5. Excavation de-watering. Excavation de-watering is the removal of water from trenches, foundations, coffer dams, ponds, and other areas within the construction area that retain water after excavation. In most cases the collected water is heavily silted and hinders correct and safe construction practices. The collected water removed from the ponded area, either through gravity or pumping, must be spread through natural wooded buffers or removed to areas that are specifically designed to collect the maximum amount of sediment possible, like a cofferdam sedimentation basin. Avoid allowing the water to flow over disturbed areas of the site. Equivalent measures may be taken if approved by the Engineer and Owner.

   NOTE: Dewatering controls are discussed in the “Maine Erosion and Sediment Control BMPs, Maine Department of Environmental Protection.”

6. Authorized Non-stormwater discharges. Identify and prevent contamination by non-stormwater discharges. Where allowed non-stormwater discharges exist, they must be identified and steps should be taken to ensure the implementation of appropriate pollution prevention measures for the non-stormwater component(s) of the discharge. Authorized non-stormwater discharges are:

   (a) Discharges from firefighting activity;

   (b) Fire hydrant flushings;

   (c) Vehicle washwater if detergents are not used and washing is limited to the exterior of vehicles (engine, undercarriage and transmission washing is prohibited);

   (d) Dust control runoff in accordance with permit conditions and Section 3 above;

   (e) Routine external building washdown, not including surface paint removal, that does not involve detergents;

   (f) Pavement washwater (where spills/leaks of toxic or hazardous materials have not occurred, unless all spilled material had been removed) if detergents are not used;

   (g) Uncontaminated air conditioning or compressor condensate;

   (h) Uncontaminated groundwater or spring water;

   (i) Foundation or footer drain-water where flows are not contaminated;

   (j) Uncontaminated excavation dewatering (see requirements in Section 5 above);

   (k) Potable water sources including waterline flushings; and

   (l) Landscape irrigation.

7. Unauthorized non-stormwater discharges . The following non-stormwater discharges are prohibited:

   (a) Wastewater from the washout or cleanout of concrete, stucco, paint, form release oils, curing compounds or other construction materials;

   (b) Fuels, oils or other pollutants used in vehicle and equipment operation and maintenance;

   (c) Soaps, solvents, or detergents used in vehicle and equipment washing; and

   (d) Toxic or hazardous substances from a spill or other release.

PRELIMINARY - NOT FOR CONSTRUCTION

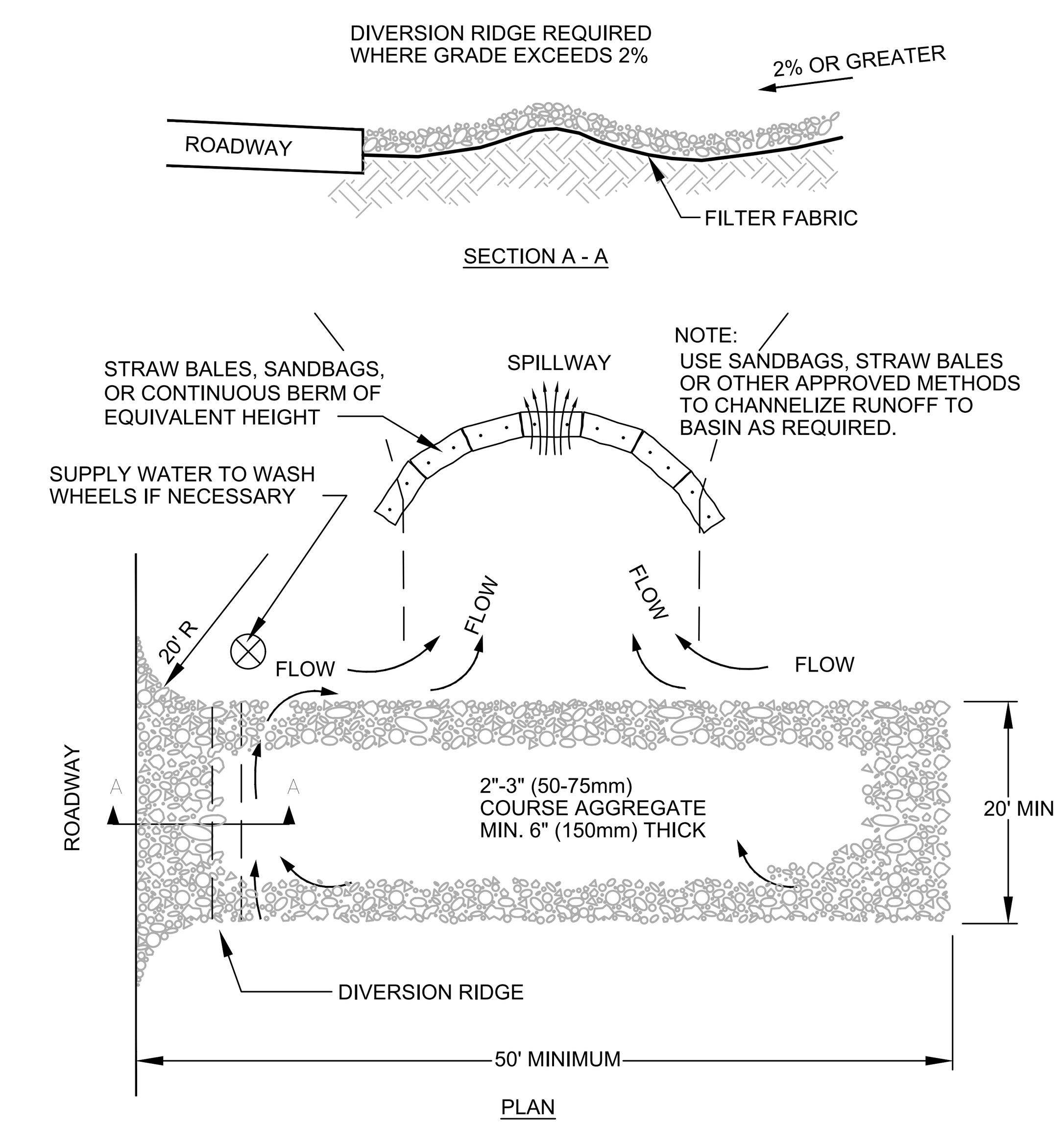

NOTES:
1. THE ENTRANCE SHALL BE MAINTAINED IN A CONDITION THAT WILL PREVENT TRACKING OR FLOWING OF SEDIMENT ONTO PUBLIC RIGHT-OF-WAYS. THIS MAY REQUIRE TOP DRESSING, REPAIR AND/OR CLEAN OUT OF ANY MEASURES USED TO TRAP SEDIMENT.

2. WHEN NECESSARY, WHEELS SHALL BE CLEANED PRIOR TO ENTRANCE ONTO PUBLIC RIGHT-OF-WAY.

3. WHEN WASHING IS REQUIRED, IT SHALL BE DONE ON AN AREA STABILIZED WITH CRUSHED STONE THAT DRAINS INTO AN APPROVED SEDIMENT TRAP OR SEDIMENT BASIN.

STABILIZED CONSTRUCTION ENTRANCE
NOT TO SCALE

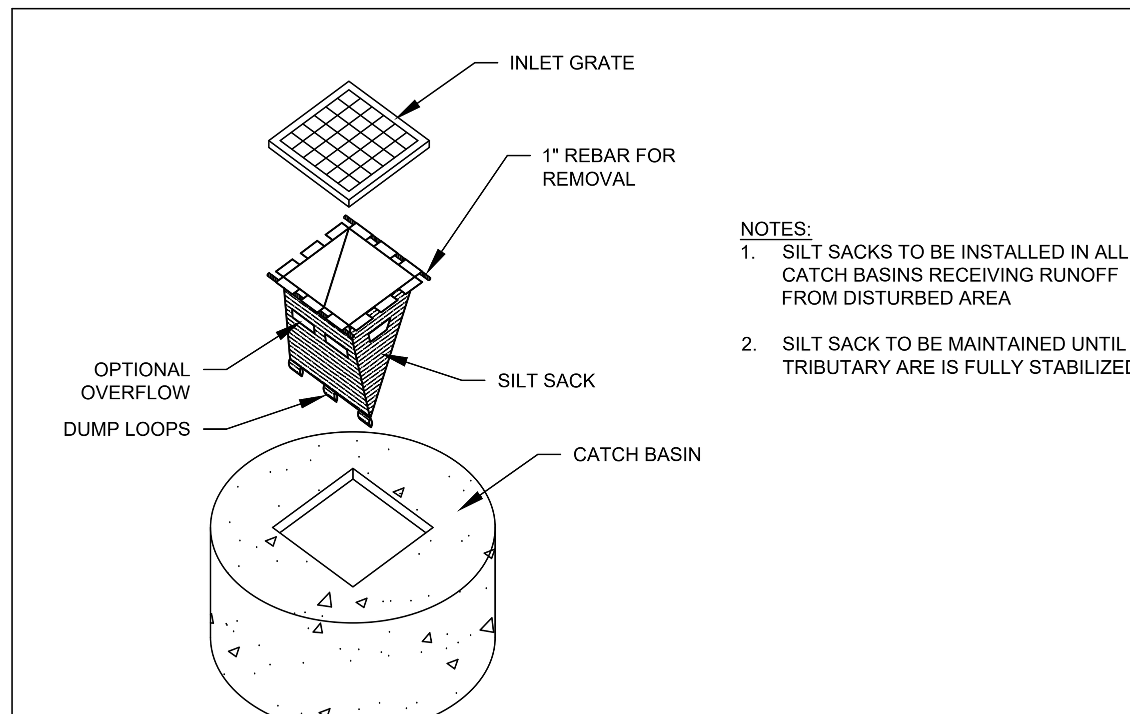

NOTES:
1. SILT SACKS TO BE INSTALLED IN ALL CATCH BASINS RECEIVING RUNOFF FROM DISTURBED AREA
2. SILT SACK TO BE MAINTAINED UNTIL TRIBUTARY ARE IS FULLY STABILIZED

SILT SACK DETAIL
NOT TO SCALE

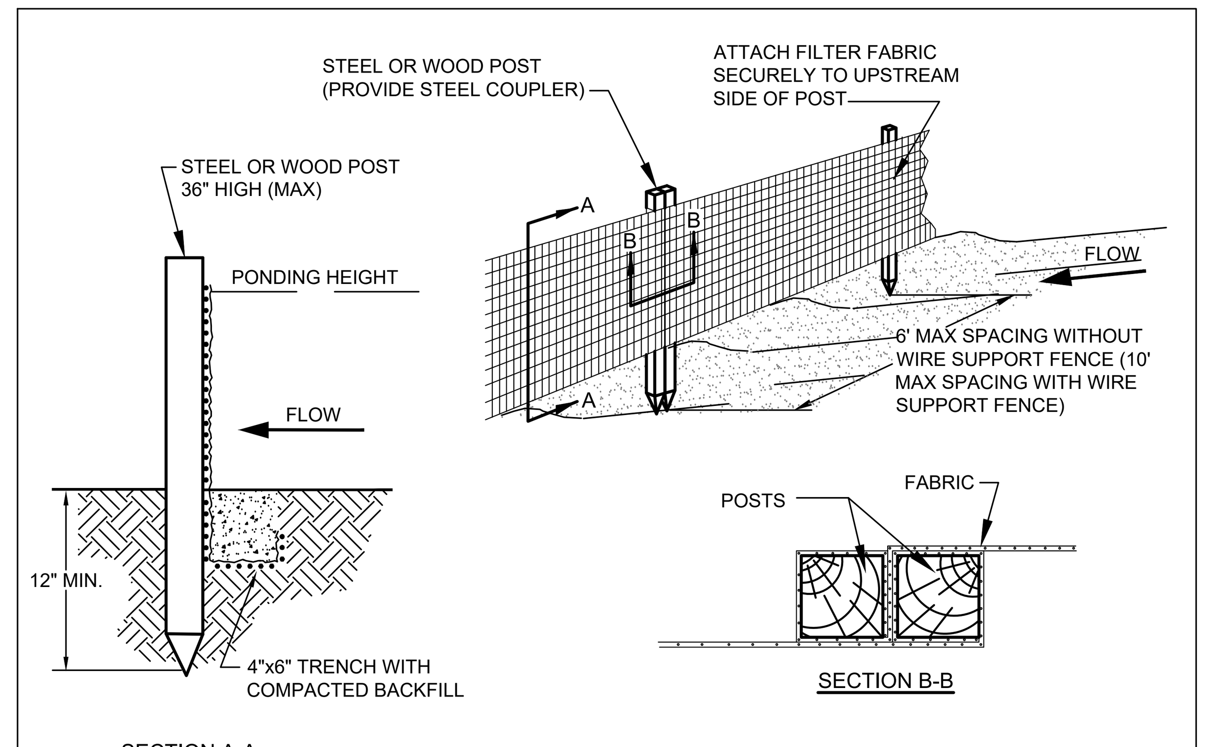

SILT FENCE
NOT TO SCALE

STATE OF MAINE
MICHAEL E. TADEMA-WIELANDT
No. 11587
LICENSED
PROFESSIONAL ENGINEER

P.E.: MICHAEL E. TADEMA-WIELANDT
DATE: 3-28-2018

NO.	DATE	REVISIONS	APP'D BY
1	3-28-2018	SUBMITTED TO PLANNING BOARD FOR APPROVAL	MTW

TERRADYN CONSULTANTS, LLC
CUMBERLAND HALL
41 CAMPUS DRIVE, SUITE 101
NEW GLOUCESTER, ME 04260
565 CONGRESS STREET
SUITE 310
PORTLAND, ME 04102
OFFICE: (207) 926-5111 FAX: (207) 221-1317
www.terradynconsultants.com
Civil Engineering - Land Planning - Stormwater Design - Environmental Permitting

SHEET DESCRIPTION
178 KENNEBEC STREET
178 KENNEBEC STREET
PORTLAND, ME 04101
EROSION CONTROL NOTES & DETAILS
PREPARED FOR
MAINE WORKFORCE HOUSING, LLC
482 CONGRESS STREET, SUITE 203
PORTLAND, ME 04101

DATE:	3/16/2018
SCALE:	N.T.S.
DESIGNED:	ARF
JOB NO:	1747
FILE: 1747-DETAILS.DWG	
SHEET	C-6.2

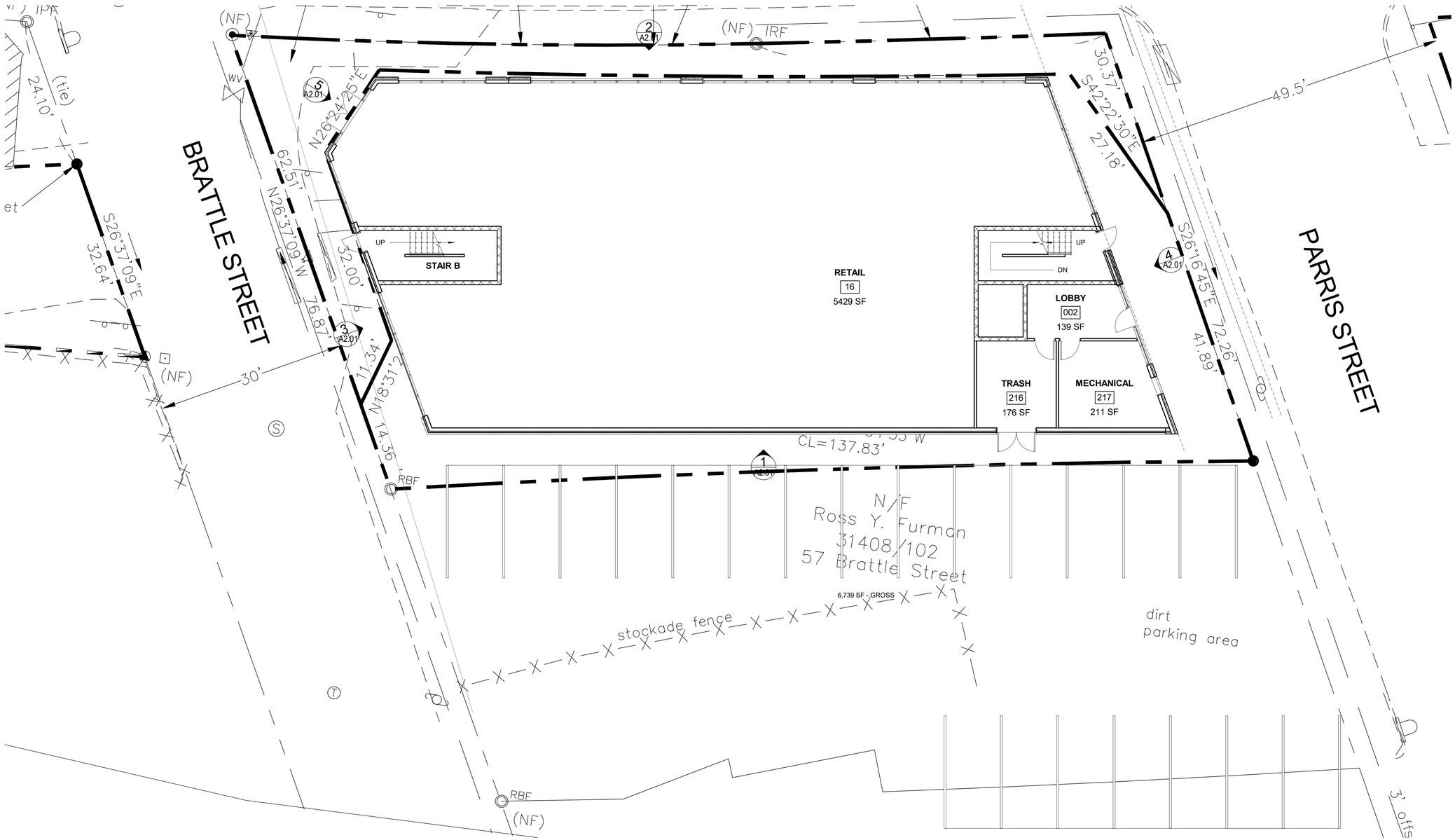

1 FIRST FLOOR
1/8" = 1'-0"

PROJECT DATA

FIRST FLOOR 6,667 SF - GROSS	5429 SF RETAIL TRASH ROOM MECHANICAL ROOM
SECOND FLOOR 6,667 SF - GROSS	(5) 1-BR UNITS (1) EFF UNITS TELEMED ROOM LAUNDRY ROOM COMMUNITY ROOM
TYPICAL FLOOR 3-7 6,667 SF - GROSS (5 FLOORS)	(8) 1-BR UNITS

45 1-BR UNITS
1 EFFICIENCIES
46 UNITS TOTAL

Prepared For: Owner

Consultant:

Architect: ARCHETYPE architects
48 Union Wharf Portland, Maine 04101
(207) 772-6022 ARCHETYPE@ARCHETYPEPA.COM

Project: KENNEBEC STREET
PORTLAND, MAINE

Revisions:

Scale: As indicated

Date: JAN 12 2018

FLOOR PLANS

A1.01

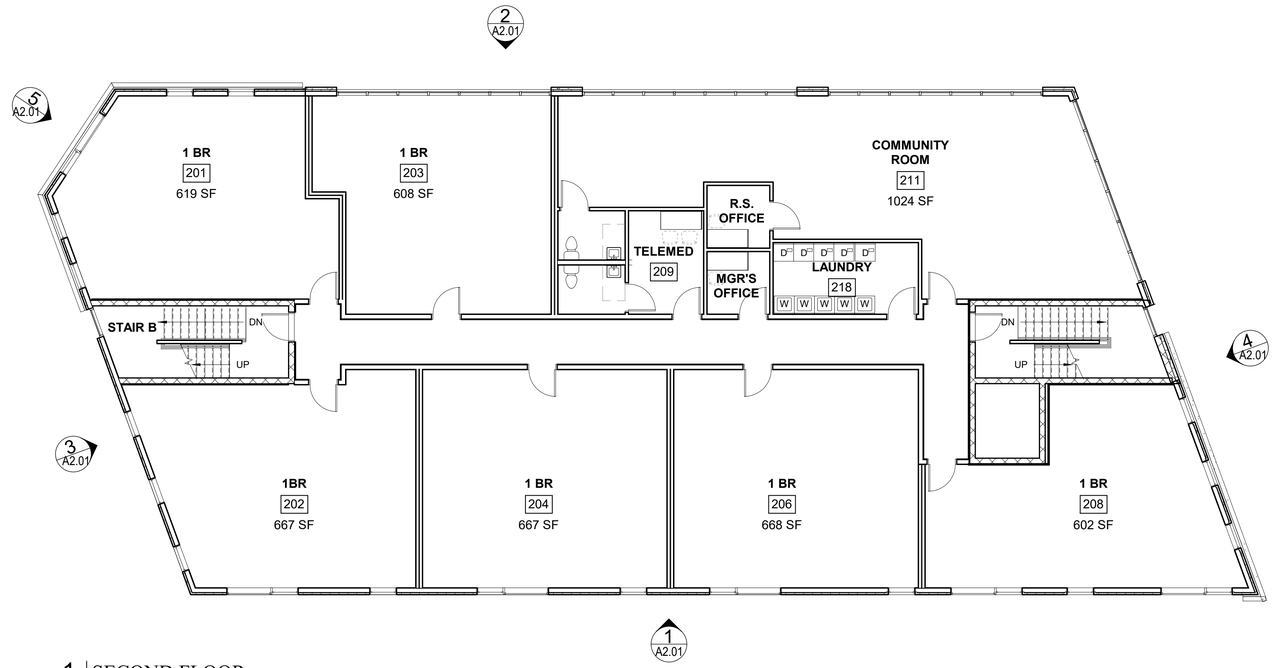

1 SECOND FLOOR
1/8" = 1'-0"

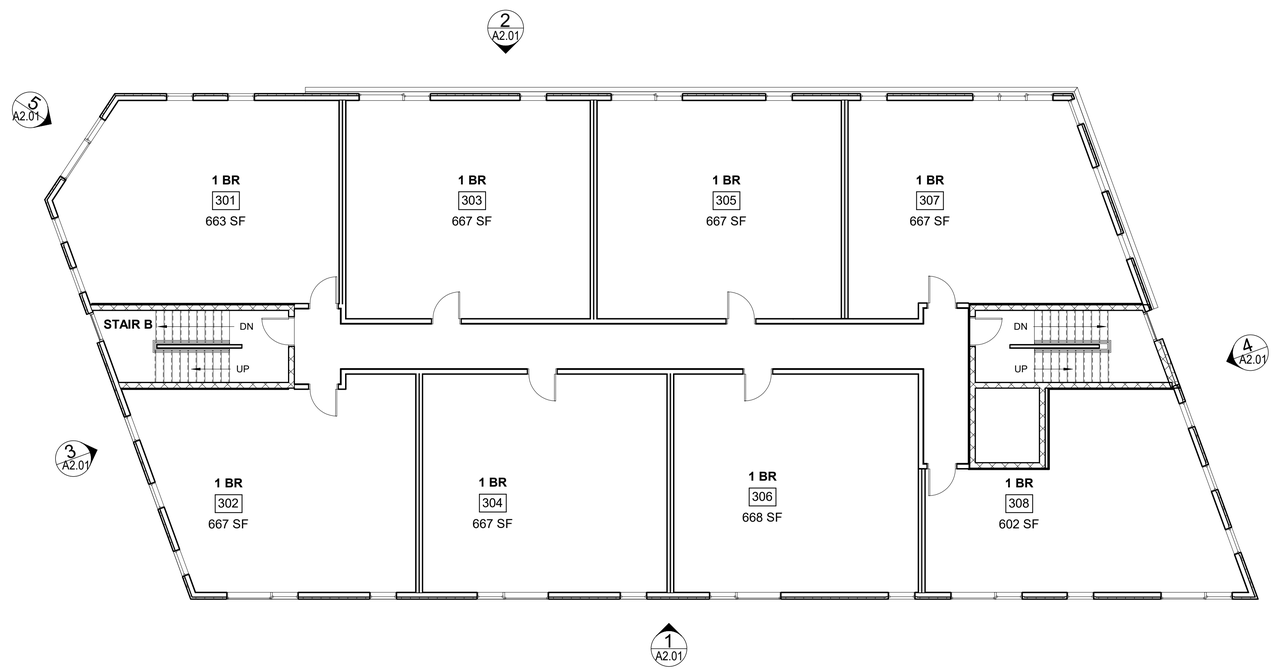

2 THIRD FLOOR
1/8" = 1'-0"

PROJECT DATA

FIRST FLOOR 6,667 SF - GROSS	5429 SF RETAIL TRASH ROOM MECHANICAL ROOM
SECOND FLOOR 6,667 SF - GROSS	(5) 1-BR UNITS (1) EFF UNITS TELEMED ROOM LAUNDRY ROOM COMMUNITY ROOM
TYPICAL FLOOR 3-7 6,667 SF - GROSS (5 FLOORS)	(8) 1-BR UNITS

45 1-BR UNITS
1 EFFICIENCIES
46 UNITS TOTAL

Prepared For: Owner
Address
City, State

Consultant:

Architect: ARCHETYPE architects
48 Union Wharf Portland, Maine 04101
(207) 772-6022 ARCHETYPE@ARCHETYPEPA.COM

Project: KENNEBEC STREET
PORTLAND, MAINE

Revisions:

Scale: As indicated

Date: JAN 12 2018

SECOND & TYPICAL FLOOR PLANS

A1.02

1 NORTH ELEVATION
3/32" = 1'-0"

4 EAST ELEVATION
3/32" = 1'-0"

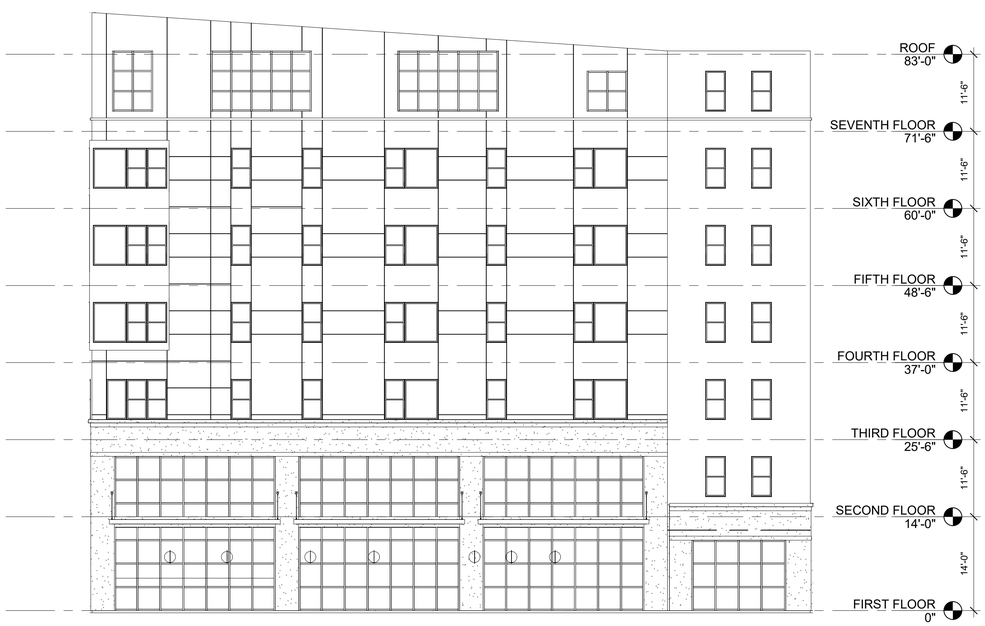

2 SOUTH ELEVATION
3/32" = 1'-0"

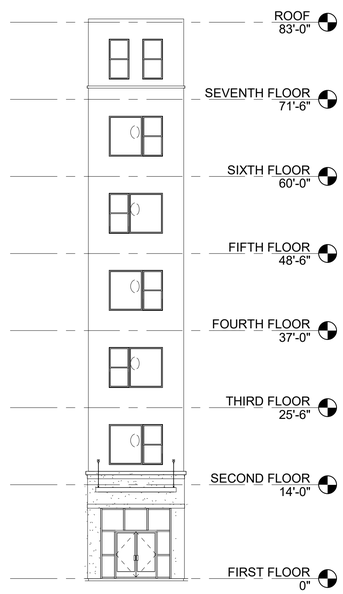

5 SOUTH WEST ELEVATION
3/32" = 1'-0"

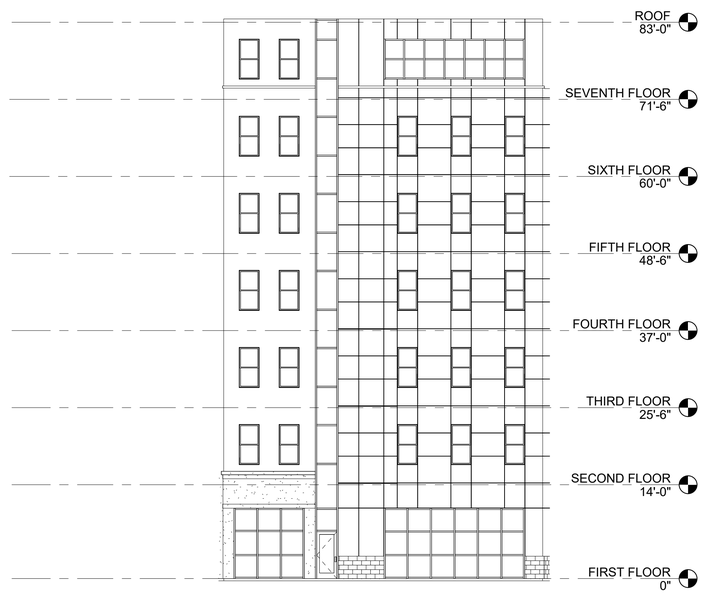

3 WEST ELEVATION
3/32" = 1'-0"

Prepared For:
Owner
Address
City, State

Consultant:

Architect:
ARCHETYPE
architects
48 Union Wharf Portland, Maine 04101
(207) 772-6022 ARCHETYPE@ARCHETYPEPA.COM

Project:
KENNEBEC STREET
PORTLAND, MAINE

Revisions:

Scale: 3/32" = 1'-0"

Date: JAN 12 2018

Building Elevations

A2.01

INTERME

LEANER

PLANT LIST

TREES & SHRUBS

KEY	COMMON & BOTANICAL NAME	SIZE	ROOT	QTY	NOTES
A	STREETKEEPER HONEYLOCUST G. TRIACANTHOS Var. 'inermis' 'Streetkeeper'	2 ½ " Dia.	B&B	6	8' CLEARCANOPY UNDERSTORY
B	THORNLESS COCKSPUR HAWTHORN C.CRUZGALLI 'Inermis'	2 ½ " Dia.	B&B	1	"
C	EUROPEAN HORNBEAM C.BETULUS	2" Dia.	B&B	1	"
D	SHASTA VIBURNUM 'Summer snowflake' V. PLICATUM Var. Tomentosum 'Summer Snowflake'	#5	Cont.	5	

PERENNIALS

			QTY	NOTES
AA	SWITCH GRASS PANICUM VIRGATUM ' Cheyenne Sky'	——	40	@12" o.c.
BB	SWITCH GRASS PANICUM VIRGATUM ' Shenandoah'	——	36	@ 12" o.c.
CC	ASTILBE FALSE SPIREA VAR.	——	——	@ 15" o.c.
DD	LADY FERN FILIX-FEMINA	——	3	@ 15" o.c.
EE	MAIDEN HAIR FERN ADIANTUM PEDATUMLAVEN	CONT.	——	——
FF	HAY SCENTED FERN DENNSTAEDTIA PUNCTILOBA	CONT.	3	@ 15" o.c.
GG	OSTRICH FERN MATTEUCCIA STRUTHIOPTERIS	CONT.	9	@ 2' o.c.
HH	WILD GINGER ASARUM CANADENSE	——	48	@ 9" O.C.

PLANTING NOTES

1. The contractor shall supply all plants in quantities sufficient to complete the work shown on plan. Any discrepancies between quantities shown on plant list and those required by this drawing shall not entitle contractor to additional remuneration.
2. Any plant substitutions must be approved by the owner.
3. Any tree or shrub which comes over or under any utility shall be relocated on the site by the landscape architect.
4. All lawn areas to have 6" of topsoil unless noted otherwise.
5. All trees and shrubs shall be placed in the designated areas as shown on the plan and before planting shall be approved by the landscape architect.
6. The contractor shall relocate any tree or shrub as directed by the landscape architect.
7. All plant material installed shall meet the specifications of the American Standard for Nursery Stock (latest edition) as set forth by the American Association of Nurserymen.
8. The landscape contractor shall replace or repair to original condition any and all utilities, paving, curbing, etc., damaged as a result of their operations at no additional cost to the owner.

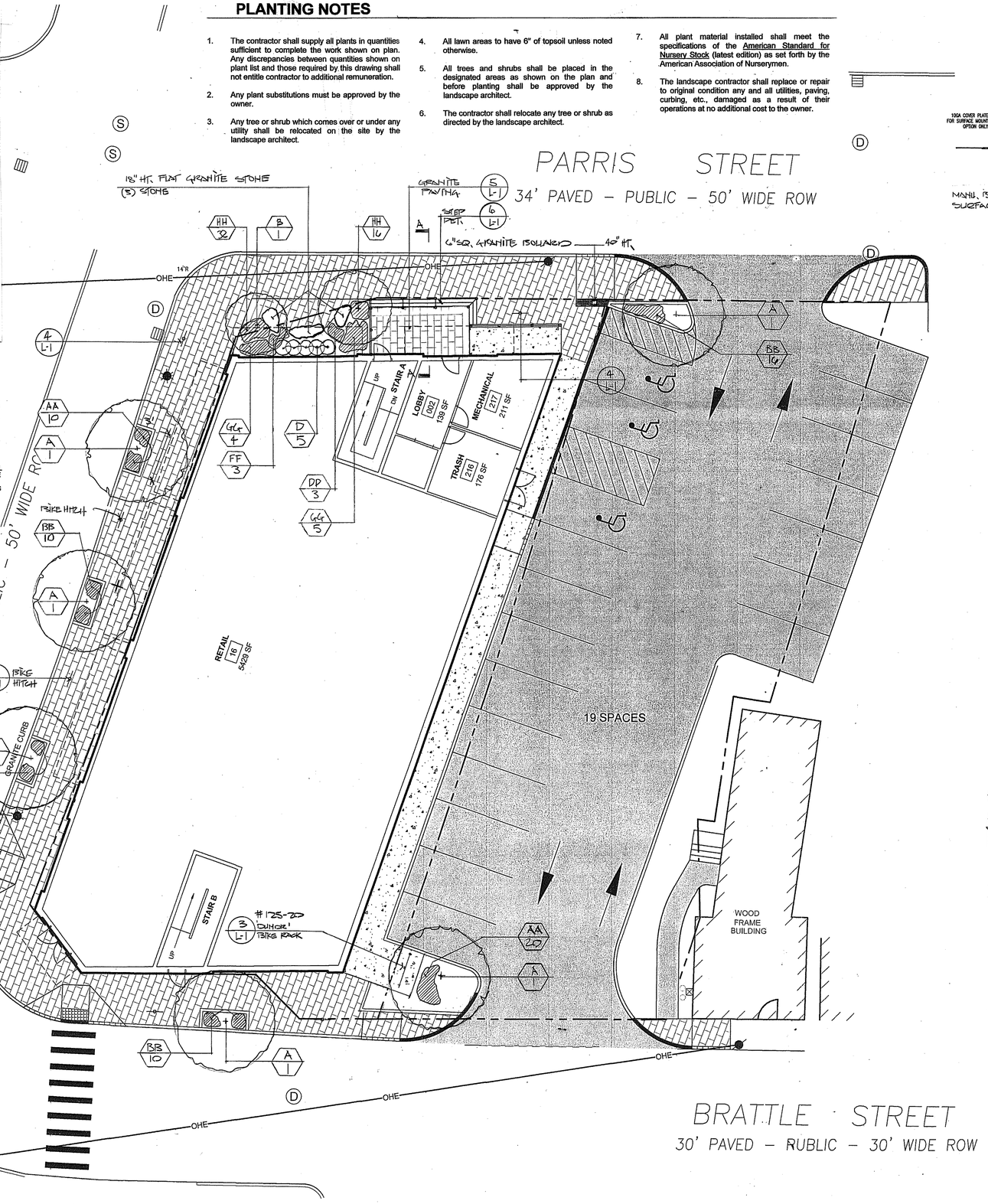

NOTES:

1. TREE SHALL BEAR SAME RELATION TO GRADE AS PRIOR TO PLANTING.
2. NEVER CUT A LEADER, THIN BRANCHES & FOLIAGE BY 1/3 RETAINING NORMAL TREE SHAPE.

NOTE 'B':

SECURE GUYS W/ RUBBER HOSE & #12 GA. WIRE SIM. TO STAKING NOTE 'A'.

2" GALV. TURNBUCKLE (3 GUYS/TREE)

CLAMP FOR GUY REMOVAL

TO METAL DEADMAN ANCHORS DRIVEN INTO SUBGRADE

2X BALL DIA.

NOTE 'A':

FOR ALL TREES UP TO 2 1/2" CAL. USE 2"x2" OR 2 1/2" □ STAKES W/ 2-#12 GA. GALV. WIRE ENCASED IN 2 PLY REINF. RUBBER HOSE. 1/2" INSIDE DIA.
GUY ALL TREES OVER 2 1/2"DIA. NOTE 'B'). GUY ALL EVERGREEN TREES.

#12 GA. ANNEALED GALV. WIRE IN RUBBER HOSE (SEE NOTE 'A')

WOOD STAKES - DARK WALNUT OIL STAIN - ONE COAT, 3 STAKES/TREE

APPROVED TREE WRAP, LAP ENDS DO NOT STAPLE. WRAP TO HT. OF 2ND BRANCH

3" SHREDDED BARK MULCH (EXCEPT AS NOTED)

REMOVE BURLAP FROM TOP 1/3RD. OF BALL

6" TEMP. SAUCER

SOIL MIX NOTES
FOR DECIDUOUS TREES USE 4 PARTS TOPSOIL, 1 PART MANURE.
FOR EVERGREEN TREES USE 4 PARTS TOPSOIL, 1 PART PEAT HUMUS.

4" MOUND FOR DRAINAGE

1/L-1 **TREE PLANTING DETAIL**

NTS

NOTE: SHRUBS SHALL BEAR SAME RELATION TO GRADE AS PRIOR TO PLANTING.

3" BARK MULCH W/ 4" SAUCER

REMOVE BURLAP FROM TOP 1/3 BALL

SOIL MIX NOTES:

4 PARTS TOPSOIL, 1 PART HUMUS FOR EVERGREENS
4 PARTS TOPSOIL, 1 PART MANURE FOR DECIDUOUS SHRUBS

2/L-1 **SHRUB PLANTING DETAIL**

NTS

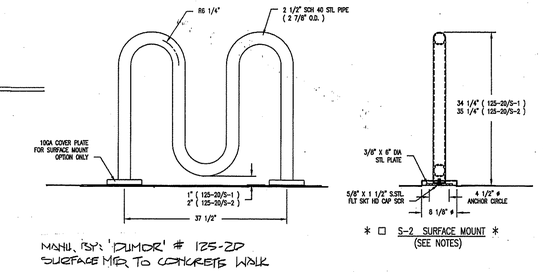

3/1-1 **BIKE RACK DETAIL**

NTS

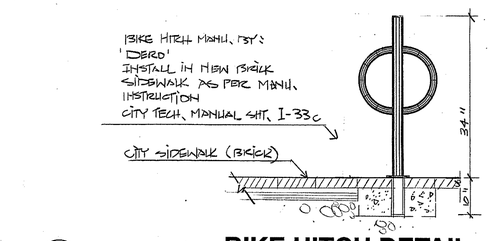

4/L-1 **BIKE HITCH DETAIL**

NTS

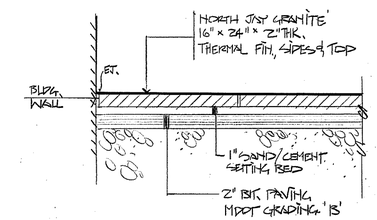

15/L-1 **GRANITE PAVER DETAIL**

NTS

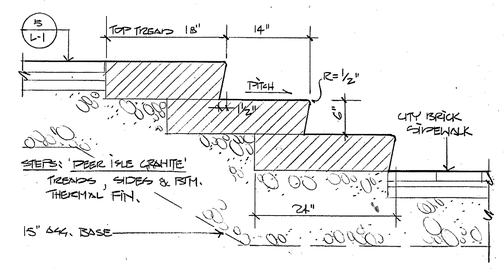

6/L-1 **STONE STEP DETAIL** A-A

NTS

GRAPHIC SCALE

(IN FEET)
1 inch = 10 ft.

PRELIMINARY - NOT FOR CONSTRUCTION

REGISTERED LANDSCAPE ARCHITECT ANTHONY MUENCH No. 7 3-28-18 State of Maine

NO.	DATE	REVISIONS	APP'D BY
1	3-28-2018	SUBMITTED TO PLANNING BOARD FOR APPROVAL	

DATE:

TERRADYN CONSULTANTS, LLC
P.O. BOX 339
111 ELDERBERRY LANE
NEW GLOUCESTER, ME 04260
OFFICE: (207) 926-5111 FAX: (207) 221-1317
www.terradynconsultants.com
565 CONGRESS STREET
SUITE 310
PORTLAND, ME 04102
Civil Engineering - Land Planning - Stormwater Design - Environmental Permitting

SHEET DESCRIPTION
178 KENNEBEC STREET
178 KENNEBEC STREET
PORTLAND, ME 04101
LANDSCAPE PLAN

PREPARED FOR
THE SZANTON COMPANY
482 CONGRESS STREET, SUITE 203
PORTLAND, ME 04101

DATE:	3/16/2018
SCALE:	1" = 10'
DESIGNED:	ARF
JOB NO:	1747
FILE:	1747-B.DWG
SHEET:	L-1

Memorandum
Planning and Urban Development Department
Planning Division

To: Sean Dundon, Chair and Members of the Portland Planning Board
From: Shukria Wiar, Planner
Date: May 17, 2018
Re: May 11, 2018 Planning Board Workshop

I. INTRODUCTION

The applicant, 1006 Congress LLC, has requested map amendment for an approximately 19,800 sq. ft. property at 1006 Congress Street that is located at the corner of Congress and Westfield Streets. The map amendment parcel is shown below.

The parcel is in the Industrial- Low Impact IL zone. The proposed map amendment relates to the area outlined in yellow line and is a proposal to change from IL to Business Community B-2 zone.

The submitted narrative (Attachment A) indicates that the objective is to allow for the development of a mixed-use development comprising commercial and retail uses (a possible café) on the lowest floor and business office above this, as the IL zone does not allow retail or office uses other than back office that are accessory to a permitted use. The rezoning to the B-2 zone would allow this development but would also allow a wide range of uses not allowed in the IL zone, such as retail, restaurants, neighborhood center and general businesses and professional offices. The applicant's narrative analyzes the site and zoning and concludes that the size and historic structure would limit industrial uses and it is more suitable for a mixed-use development that includes retail and offices.

A legal ad for the Board workshop was posted on the city's web page and appeared in the *Portland Press Herald* on May 7th and 8th, 2018. Notices were also sent to 160 property owners within 1000 feet of the site and to the interested citizen list.

Owner	Richard Packard, SA
Consultants	
Agent/ Representative	Katherine Detmer, Archetype, PA
Engineer	Matthew J. Miller, P.E. of M2 Structural Engineering, P.C.
Architect	Katherine Detmer, Archetype, PA
Surveyor	Ellen Brewer, Owen Haskell Inc

II. PROPOSED MAP AMENDMENT

Current Zoning:	Industrial- Low Impact IL
Proposed Zoning:	Business Community B-2
Current Uses:	
Proposed Uses:	As allowed in B-2 zone; narrative suggests with mixed use including café and offices
Parcel Area:	Approximately 19,800 SF

III. EXISTING CONDITONS

The parcel has ninety-nine feet of frontage along Congress Street and 123 feet along Westfield Street. The site has an existing building and two driveways, one off of each street. The existing building is a Captain's House and barn built in the late 1800s, complete with a turreted roof and a large addition that was added in the 1970's. The applicant would like to keep the existing structure and believes that it "*would be the sustainable approach*". According to the applicant's cover letter, "*the interior spaces are smaller and want to remain so due to the nature of the masonry structure therefore being ill-suited to any industrial use*". Industrial development abuts the parcel to the south and the west.

IV. ZONING CONTEXT

The property is located in Libbytown, which is to the west of Congress Street's more vibrant downtown district. The area is comprised of residential properties combined with smaller commercial properties.

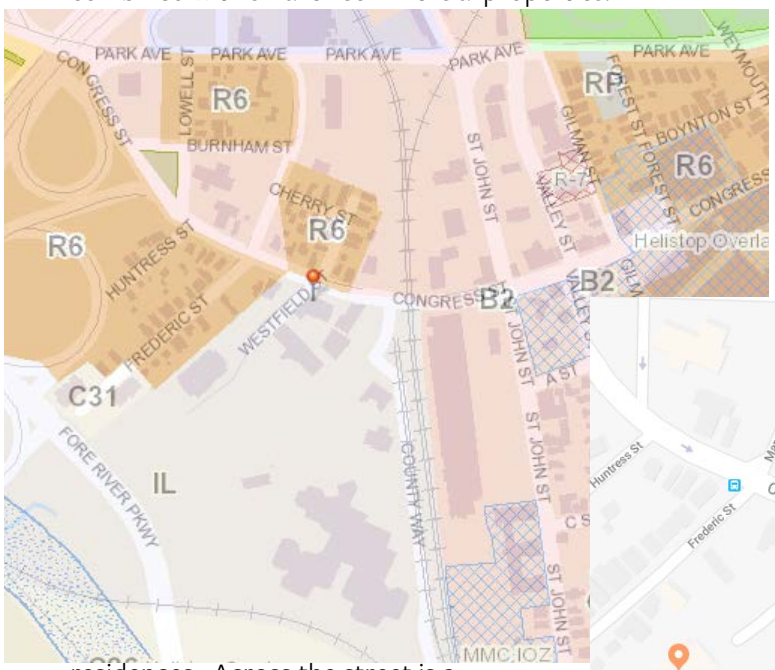

The applicant has set out the arguments in support of the B-2 zone in the attached narrative (Attachment A and discussed below). The site and the surrounding parcels from Congress Street to Fore River Parkway are all in the IL zone. The IL zone is designed to act as a buffer between neighboring residential zones and I-M or I-H zones allowing for uses that are low intensity in nature and therefore compatible with neighboring residences. Across the street is a Residential R-6 zone and northeast of the site is the B-2 zone.

The parcel abuts developed industrial uses on two sides, which are part of this industrial area that is increasingly providing sites for breweries and other

artisan uses that are allowed in the IL zone, but not in the B-2 zone.

Purpose Statements
The purpose statements for both zones are included in the table below. The IL aims to provide for low impact industrial uses, while the B-2 is more focused on the integration of small scale commercial uses with residential.

Table 1: Purpose Statements	
Industrial- Low Impact IL	**Business Community B-2**
The low impact industrial zone is intended to provide areas in which low impact industrial uses and limited other uses serving employees and residents of the surrounding neighborhood will be compatible with adjacent residential uses, will provide a buffer between residential neighborhoods and the I-M or I-H industrial zones, or will stand alone as a smaller scale industrial district. The I-L zone is located adjacent to residential neighborhoods, business uses and other industrial uses where the low intensity nature of the uses, as well as their strict performance standards, will ensure the compatibility of the uses with other adjacent industrial and nonindustrial uses. Performance standards for uses in the I-L zone are designed to maintain compatibility between low impact industrial uses and neighboring nonindustrial and industrial uses. Performance standards include full enclosure of uses and requirements for buffers and screening from adjacent properties.	The purpose of the B-2 community business zone is: 1. To provide appropriate locations for the development and operation of community centers offering a mixture of commercial uses, housing and services serving the adjoining neighborhoods and the larger community. 2. The variety, sites and intensity of the permitted commercial uses in the B-2 zone are intended to be greater than those permitted in the B-1 neighborhood business zone. 3. The B-2 zone will provide a broad range of goods and services and general businesses with a mixture of large and small buildings such as grocery stores, shops and services located in major shopping centers and along arterial streets. Such establishments should be readily accessible by automobile, by pedestrians and by bicycle. Development in the B-2 zone should relate to the surrounding neighborhoods by design, orientation, and circulation patterns. 4. The B-2 and B-2b will provide locations for moderate to high density housing in urban neighborhoods along arterials.

Permitted Uses & Potential Impacts
The existing IL zone emphasizes, in addition to employment-creating industrial uses, a wide range of uses that are smaller in scale (with some exceptions such as indoor amusement and recreation centers, plant and tree nurseries, marinas and lumber yards). It also includes uses that support the surrounding neighborhood such as day care facilities, makers markets, artists' studios, and neighborhood centers. This zone does not allow retail uses or office uses other than back office that are accessory to a permitted use.

The proposed B-2 zoning designation allows a range of residential uses on upper floors. It alos allows bed and breakfast and hostels on upper floors. The zone permits restaurants, day care facilities, neighborhood centers and a wide range of commercial and institutional uses, including retail establishments, offices, personal services, business services, places of assembly, clinics, municipal uses, and schools. Both zones allow day care facilities, neighborhood centers, and studios for artists, photographers and craftspeople. Below is chart of comparing the uses in the two zones.

USES PERMITTED	IL	B-2
Low impact industrial uses, including, but not limited to, bakeries, breweries, bottling, printing and publishing, pharmaceuticals, machine shops, musical instruments, precision instruments, watchmakers, toys and sporting goods, wood products, jewelry, assembly of electrical components, tool and die shops and the packaging of food.	✓	✓
o Indoor amusement and recreation centers. o Plant and tree nurseries, including associated recycling activities. o Lumber yards.	✓	
o Commercial kitchens or other food preparation, provided that the food is not prepared for service on the premises.	✓	✓

o Repair services, including all types of automotive repair.		
Building contractors and outside storage of related construction equipment, provided that there shall be no outside storage of materials and supplies.	✓	
Day care facilities	✓	✓
o Dairies. o Dog training services, including but not limited to obedience, guide, and service training, but not including boarding or kennel services. o Intermodal transportation facilities. o Marinas. o Back office uses.	✓	
o Distribution centers, warehouses and wholesale businesses under ten thousand (10,000) square feet in total building area, with no outside storage permitted.	✓	✓
Expansion of existing dairies	✓	✓
Utility substations	✓	✓
Accessory Uses	✓	✓
Registered medical marijuana cultivation facilities.	✓	
Neighborhood centers	✓	✓
Places of religious assembly, limited to facilities of 10,000 sf or less.	✓	✓
Wind energy systems	✓	✓
Street Vendors	✓	✓
Studios for artists and craftspeople, less than 4,000 net sf. per space	✓	✓
Day Cares	✓	✓
Residential		✓
Professional, business and general offices		✓
Personal Services		✓
General Retail establishments		✓
Pharmacies with retail sales		✓
Restaurants		✓
Municipal offices		✓
Drinking establishments, as defined in section 14-47		✓
Billiard parlors		✓
Funeral homes		✓
Lodging house		✓
Bed and breakfast, subject to the standards of article V (site plan), sections 14-522 and 14-523 notwithstanding. A bed and breakfast may include a meeting facility if for weddings, seminars, receptions, business meetings and the like and if the facility is less than 4,000 net sf.		✓
Hotels, Motels and Inns		✓
Bakeries, breweries, distilleries, commercial kitchens and similar uses with a retail component and with a total floor area of 10,000 net sf. or greater		✓

V. POLICY ANALYSIS OF PROPOSED MAP AMENDMENT

Staff suggest that there are several other factors that are relevant to a map amendment for this parcel:

- Comprehensive Plan: The City's ordinance states that any rezoning must be consistent with the City's Comprehensive Plan. In forming its recommendation to the City Council, the Board will need to make a finding on whether the proposal is consistent with the Comprehensive Plan. The applicant has included an analysis of how the proposed rezone to B-2 zone is consistent with Portland's Comprehensive Plan. In addition to the applicant's assessment, staff have identified below a number of the specific Comprehensive Plan goals and policies which are suggested as being relevant to the proposed conditional rezoning.

  The central vision of Portland's Plan 2030 is represented by the venn diagram demonstrating the integral interrelation of the community's core belief that Portland is equitable, sustainable, connected, dynamic,

authentic and secure. The vision conveys the message of the City's need to balance many competing needs to assure the advance of the vision as a unified concept. In this instance, that the City's goals for job growth and transforming Portland through orderly growth and development be balanced with needs for connectivity of the street grid, sustainability of infrastructure and the ability to maintain that infrastructure, and security in the sense of public safety.

A VIBRANT CITY

5. TARGET AREAS FOR JOB GROWTH

- Ensure that new employment can be accommodated in priority growth areas across the City.
- Evaluate zoning and the condition of existing infrastructure in priority areas - downtown, in identified neighborhood nodes, and along transit corridors – to ensure that employment and housing growth can be supported.
- Expand possibilities for live/work spaces – residential living space with integrated creative work space.
- Modify ordinances and make strategic investments to better promote business development and job creation in priority areas.

FUTURE LAND USE

Portland's plan for Future Land Use places emphasis on areas most important to its growth over the next ten years. It includes three maps: a map depicting current dominant land use patterns, a map showing a connected network of trails and open spaces, and a map of corridors and nodes that are poised to accommodate additional growth. These maps are best understood in the context of the plan's principles for future growth. The Libbytown area is one of the priority growing nodes identified in the plan as an area for the transformation.

Priority growth areas include the following elements:

1. Priority nodes Nodes are areas with concentrated mixed-use activity, which can occur at varying scales and serve varying catchment areas - Portland's downtown supports a large successful node, for example, but nodes can also be found at smaller convergences and intersections throughout the City. As mapped, nodes are not meant to sharply delineate boundaries, but to indicate general areas in need of further planning or investment. The nodes identified by the map may have seen disinvestment, grown in sprawling patterns, or simply have the potential to serve as focal points for change in density or, height, streetscape, or uses to better serve neighborhood needs. These nodes are placed into three broad categories that correspond with their respective stage of planning or investigation at the present time.

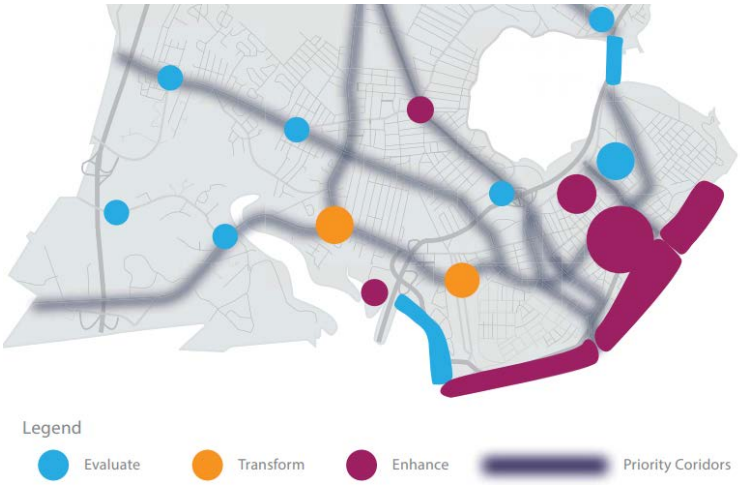

● Evaluate: Areas as diverse as East Bayside and Allen's Corner, where the City recognizes the need to review existing conditions and develop a strategy for future change. These nodes should be assessed for their ability to address neighborhood needs and serve as centers for complete neighborhoods;
● Transform: Areas such as Morrill's Corner, which have been previously recognized as areas of significant potential transformation, but which need comprehensive revisioning; and
● Enhance: Areas such as Woodford's Corner, or the Eastern, Central and Western Waterfronts, which have been studied and are awaiting or in the midst of plan implementation.

2. Priority corridors The Priority Nodes & Corridors Map identifies key corridors - those that connect major nodes and neighborhoods and therefore serve as major commuter routes - as areas for additional planning and investment. Priority corridors are major arterials that often see heavy vehicular traffic, but also have the capacity to improve mobility by capitalizing on their potential for increased walking, bicycling, and transit use. Priority corridors can also serve as areas of additional mixed-use, higher density growth to take advantage of the transit benefits and services that well-designed, diverse corridors can offer. The Congress Street Corridor in Libbytown is one of Portland's priority corridor.

- Loss of IL zoned land: City's Economic Development Department has reviewed this request for zone change offers the following, see Attachment 3 for the complete:

  The purpose of this memo is to discuss the importance of retaining industrial-zoned property in the City of Portland. This resource is finite as the majority of developable real estate in the City has been built out, and it will be very difficult to rezone property to expand Portland's industrial base.

  Over time, Portland has seen its industrial property reduced. Pressure from market forces and societal needs have driven the decrease and rezoning of industrial space primarily to business zones in order to accommodate mixed use neighborhoods. Admittedly, these neighborhoods are filling a vital need, providing increased housing as well as businesses that serve the City's residents and its burgeoning tourism market.

  Over the past few years, the City's Economic Development Department has been receiving increasing requests from companies seeking vacant industrial space or undeveloped industrial acreage for new construction. Some of these requests simply cannot be accommodated given the City's finite industrial property and its extremely low vacancy rate. When the expansion needs of existing Portland-based industrial companies cannot be accommodated locally and/or new industrial opportunities cannot be accommodated, this represents a loss to Portland's tax base and associated employment.

  To summarize, Portland's industrial space is very limited and should be preserved to the maximum extent possible. Regarding the request from the owners of 1006 Congress Street to rezone their property from IL to B-2, this seems to represent a unique set of circumstances that will not be displacing industrial uses. However, allowing for this use should be addressed in a site-specific fashion.

- B2 zone is extensive: Even though the site is a good location for IL industrial uses that have low impacts e.g. breweries, distilleries, repair services, the existing B2 zone along the corner of Congress and St. John Streets offers many opportunities for mixed use development that includes residential. This is because of its location at outer Congress Street where it is buffered along most of the property boundaries by other industrial uses and MDOT land associated with I-295.

VII. CONSIDERATION OF MAP AMENDMENT

The applicant is requesting a map amendment for their priority of 1006 Congress Street. Generally, when a map change amendment is reviewed, the Planning Board looks at it comprehensively and considers other adjacent areas that may be appropriate candidates for a similar rezoning.

This may result in the Board considering and advertising a larger geographic area for the purposes of holding a public hearing, which can be reduced in scope when the Board formulates its recommendation to the City Council. The applicant has requested a zone change for their site only. However, the Board may want to extend the zone change to include additional commercial lots abutting the site, see map insert. The area encompassed in the shaded area follow the property boundaries of the other lots facing Congress Street.

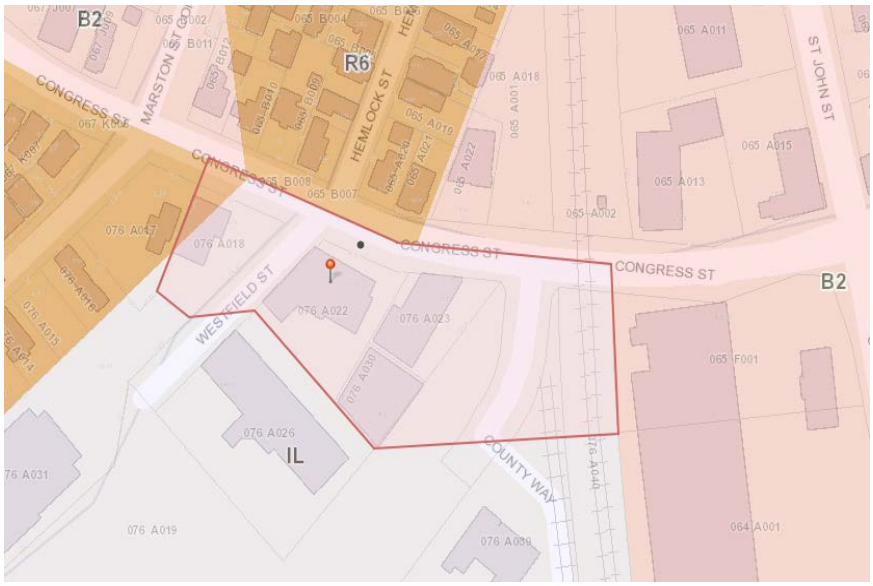

The existing uses of the businesses in the potential area of rezone, are uses that are allowed in the B-2 zone. Below is the map of uses in the vicinity.

VII. PUBLIC COMMENT

At the time this memo was prepared, the Planning Division has received two public comments in favor of the rezone.

VIII. NEXT STEPS

- The Planning Board to indicate whether additional information is needed to assess the proposal
- The Planning Board to indicate whether they support the map amendment should be extended to the IL parcel to the east and west.

IX. ATTACHMENTS

PLANNING BOARD MEMO ATTACHMENTS

1. Economic Development (Greg Mitchell)
2. Public Comment
   - PC1 Brett Gabor 3-27-18
   - PC2 Nikki Anderson 4-12-18

APPLICANT'S SUBMITTALS

A. Zoning Application
B. Cover Letter - 1006 Congress Street Zoning Amendment Application
C. 1006 Congress Quitclaim Deed
D. Response to Staff Cover Letter

PLANS

Plan 1	1006 Congress Site Plan
Plan 2	Proposed Zoning Map
Plan 3	Vicinity map 1006 Congress Street

Att. 1

Portland, Maine Yes. Life's good here.

Economic Development Department
Gregory A. Mitchell, Director

MEMORANDUM

To: Tuck O'Brien, Planning Division Director
From: Greg Mitchell, Economic Development Director
Date: April 13, 2018
RE: Importance of Retaining Portland's Industrial-Zoned Real Estate

---

OVERVIEW

The purpose of this memo is to discuss the importance of retaining industrial-zoned property in the City of Portland. This resource is finite as the majority of developable real estate in the City has been built out, and it will be very difficult to rezone property to expand Portland's industrial base.

Over time, Portland has seen its industrial property reduced. Pressure from market forces and societal needs have driven the decrease and rezoning of industrial space primarily to business zones in order to accommodate mixed use neighborhoods. Admittedly, these neighborhoods are filling a vital need, providing increased housing as well as businesses that serve the City's residents and its burgeoning tourism market.

However, in this current environment, retaining Portland's remaining industrial-zoned real estate for industrial uses is crucial to continue to grow and strengthen the City's economy. The vacancy rate of industrial space throughout the Greater Portland area has plummeted from 8% in 2011 to 1.25% in 2017. In Portland it's only 1.1%. Property in industrial zones supports a variety of businesses, many of which are manufacturers that are a vital source of quality jobs that pay livable wages. Their employee base often represents a range of educational levels, providing jobs for those with limited education and/or skills to those with advanced degrees.

LIMITED INDUSTRIAL SPACE IMPACTS

Over the past few years, the City's Economic Development Department has been receiving increasing requests from companies seeking vacant industrial space or undeveloped industrial acreage for new construction. Some of these requests simply cannot be accommodated given the City's finite industrial property and its extremely low vacancy rate. When the expansion needs of existing Portland-based industrial companies cannot be accommodated locally and/or new industrial opportunities cannot be accommodated, this represents a loss to Portland's tax base and associated employment.

TRENDS IN INDUSTRIAL SPACE DEMAND

Portland's industrial-zoned areas include Riverside Street, Riverside Industrial Parkway, Warren Avenue, Presumpscot Street, Bishop Street, Pine Tree Industrial Parkway, Canco Road, Outer Congress, sections of East Bayside and a few others. It is important to maintain as much acreage as possible in these zones.

Eimskip has established its U.S. port presence in the City of Portland at the International Marine Terminal on Commercial Street. The access to international markets that this is generating is expected to attract cold storage and other investment opportunities.

Portland's food and drink production sector has been in a growth mode, with a range of craft/artisanal companies sprouting up. This trend has the potential to expand food and drink manufacturing in the City and, therefore, contribute further to the demand for industrial space.

RECOMMENDATIONS

To summarize, Portland's industrial space is very limited and should be preserved to the maximum extent possible.

Regarding the request from the owners of 1006 Congress Street to rezone their property from IL to B-2, this seems to represent a unique set of circumstances that will not be displacing industrial uses. However, allowing for this use should be addressed in a site specific fashion.

In conclusion, I would not recommend amendments to permitted uses throughout the City's industrial zones that would reduce the opportunity for industrial business attraction and growth on Portland's remaining industrial real estate.

Portland Maine Yes. Google's good here.

Jennifer Munson <jmy@portlandmaine.gov>

Re: Public Comment for 1006 Congress Rezoning

1 message

Barbara Barhydt <bab@portlandmaine.gov> Tue, Mar 27, 2018 at 10:42 AM
To: Brett Gabor <brett.gabor@gmail.com>
Cc: Shukria Wiar <shukriaw@portlandmaine.gov>, "Munson, Jennifer" <jmy@portlandmaine.gov>

Thank you for your comments. The applicant asked to postpone this item, so the Planning Board will not discuss it this afternoon. We will include your comments when this comes forward. We don't have a meeting date for this item yet.

Thank you.

Barbara

Barbara Barhydt
Development Review Services Manager
Planning Division
389 Congress Street 4th Floor
Portland, ME 04101
(207) 874-8699
Fax: (207) 756-8256
bab@portlandmaine.gov

On Tue, Mar 27, 2018 at 9:45 AM, Brett Gabor <brett.gabor@gmail.com> wrote:

> To the Planning Board:
>
> I wish to comment on the rezoning of 1006 Congress. I am in favor of rezoning this lot, which borders Congress but does not border any residential lots, to a more appropriate commercial zone. The current industrial zone is less compatible with a lively streetscape along Congress than a business zone, which could contain a workplace, cafe, restaurant, or other amenity. The developers have been accessible to neighbors and have made good-faith attempts to listen to their concerns and I believe they will continue to be good neighbors.
>
> Best,
>
> Brett Gabor
> 40 Frederic Street

Google Groups

1006 Congress

Nikki Anderson <n.annetteanderson@gmail.com> Apr 12, 2018 12:15 PM

Posted in group: **Planning Board**

Good afternoon Council, City Manager and Planning Board,

Please find our attached letter in support of the zoning change for 1006 Congress St,

Best Regards,
Nikki Anderson
Libbytown Neighborhood Association

LIBBYTOWN
NEIGHBORHOOD ASSOCIATION
LibbytownNA

March 20, 2018

Planning Board
389 Congress St
4th Floor
Portland, ME 04101

Dear Members of the Planning Board,

The Libbytown Neighborhood Association writes in favor of the application to rezone 1006 Congress Street. This particular property presents an opportunity to bring desired amenities to an area that is currently growing beyond its former industrial nature.

Currently, the lot is zoned light industrial. This disallows many uses that would be highly regarded by neighbors, such as a restaurant, cafe, market, office space, or similar businesses that would be valued by those living in the vicinity.

The persons seeking the zoning change own more lots along Westfield Street, but have reasonably requested that only the lot that abuts Congress Street (and does not abut residential uses) be rezoned. Over the last year representatives of the owners have shown a willingness to engage with neighbors and listen to concerns that are brought forward about businesses currently located upon their property. They have expressed a desire for uses of the land that are in accordance with those expressed by many neighborhood residences.

We hope that the Planning Board will consider this particular zoning application as a means to expand the allowed uses beyond merely industrial, which will help provide a lively neighborhood atmosphere where people live, play, and work.

Warm regards,

The Libbytown Neighborhood Association

Att. A

Zoning Map, Text Amendment, Contract or Conditional Rezoning Application Portland, Maine

Planning and Urban Development Department
Planning Division

Portland's Planning and Urban Development Department coordinates the review of requests for zoning map amendments, zoning text amendments and contract or conditional re-zoning. The Division also coordinates site plan, subdivision and other applications under the City's Land Use Code. Attached is the application form for a Zoning Map, Text Amendment or Contract/Conditional Rezonings.

Portland's development review process and requirements are outlined in the Land Use Code (Chapter 14), Design Manual and Technical Manual.

Planning Division
Fourth Floor, City Hall
389 Congress Street
(207) 874-8719
planning@portlandmaine.gov

Office Hours
Monday thru Friday
8:00 a.m. – 4:30 p.m.

I. Project Information (Please enter n/a on those fields that are not applicable)

Project Name:	1006 Congress
Proposed Development Address:	1006 Congress Street
Project Description:	Repairs and restoration of existing building to use for multiple tenant spaces.
Chart/Block/Lot:	76-A-22
Right, Title or Interest (*Please identify the status of the applicant's right, title, or interest in the subject property – for example a deed, option or contract to purchase or lease the subject property)*	Owner, deed attached.
Existing Use (*Describe the existing use of the subject property)*	Vacant
Current Zoning Designation:	IL
Proposed Use of the Property (*Please describe the proposed use of the subject property. If construction or development is proposed, please describe any changes to the physical condition of the property)*	Business Offices with possible cafe on first floor.
Vicinity Map (*Attach a map showing the subject parcel and abutting parcels, labeled as to ownership and/or current use)*	
Site Plan (*On a separate sheet, please provide a site plan of the property showing existing and proposed improvements, including such features as buildings, parking, driveways, walkways, landscape and property boundaries. This may be a professionally drawn plan, or a carefully drawn plan – to scale – by the applicant. (Scale to suit, range from 1' = 10' to 1' = 50'.) Contract and conditional rezoning applications may require additional site plans and written material that address physical development and operation of the property to ensure that the rezoning and subsequent development are consistent with the comprehensive plan, meet applicable land use regulations, and compatible with the surrounding neighborhood)*	

II. Contact Information (Please enter n/a on those fields that are not applicable)

APPLICANT

Name:	Richard Packard/Jennifer Packard
Business Name:	1006 Congress LLC
Address:	33 Mc Alister Farm Road
City/State:	Portland, ME
Zip Code:	04103
Work #:	949-338-8123
Home #:	949-338-8123
Cell #:	949-338-8123
Fax #:	949-338-8123
E-mail:	packard.jen@gmail.com

OWNER

Name:	Same as applicant
Address:	
City/State:	
Zip Code:	
Work #:	
Home #:	
Cell #:	
Fax #:	
E-mail:	

AGENT/REPRESENTATIVE

Name:	Archetype Architects
Address:	48 Union Wharf
City/State:	Portland, ME
Zip Code:	04105
Work #:	(207) 772-6022
Home #:	
Cell #:	
Fax #:	
E-mail:	detmer@archetypepa.com sue @archetypepa.com

BILLING (to whom invoices will be forwarded to)

Name:	Same as Applicant/Owner
Address:	
City/State:	
Zip Code:	
Work #:	
Home #:	
Cell #:	
Fax #:	
E-mail:	

ENGINEER

Name:	Matthew Miller, P.E. M2 Structural Engineering, P.C.
Address:	23 Thornbury Way
City/State:	Windham, ME
Zip Code:	04062
Work #:	201-892-0983
Home #:	
Cell #:	
Fax #:	
E-mail:	matt@m2se.com

SURVEYOR

Name:	Owen Haskel, Inc.
Address:	390 US 1
City/State:	Falmouth, Me
Zip Code:	04105
Work #:	207-774-0424
Home #:	
Cell #:	
Fax #:	207-774-0511
E-mail:	ebrewer@owenhaskell.com

ARCHITECT

Name:	Archetype Architects
Address:	48 Union Wharf
City/State:	Portland, ME
Zip Code:	04101
Work #:	207-772-6022
Home #:	
Cell #:	
Fax #:	
E-mail:	detmer@archetypepa.com

ATTORNEY

Name:	Andre Duchatte
Address:	30 Milk Street, 5th floor
City/State:	Portland, ME
Zip Code:	04101
Work #:	207-828-2005
Home #:	
Cell #:	
Fax #:	
E-mail:	aduchette@tmfattorneys.com

DESIGNATED PERSON(S) FOR UPLOADING INTO e-PLAN

Name:	Susan Geffers
E-mail:	sue@archetypepa.com
Name:	Katherine Detmer
E-mail:	detmer@archetypepa.com
Name:	
E-mail:	

III. APPLICATION FEES (check applicable review)

☑	**Zoning Map Amendment** from (IL) zone to (B2) zone	$3,000.00
☐	**Zoning Text Amendment** to Section 14- ( ) (For a zoning text amendment, attach on a separate sheet the exact language being proposed, including existing relevant text, in which language to be deleted is depicted as crossed out (~~example~~).	$3,000.00
☐	**Combination Zoning Text Amendment and Zoning Map Amendment**	$4,000.00
☐	**Conditional or Contract Zone** *(A conditional or contract rezoning may be requested by an applicant in cases where limitations, conditions, or special assurance related to the physical development and operation of the property are needed to ensure that the rezoning and subsequent development are consistent with the comprehensive plan, meet applicable land use regulations, and compatible with the surrounding neighborhood. Please refer to Division 1.5, Section 14-60-62.)*	$5,000.00

IV. FEES ASSESSED AND INVOICED SEPARATELY

- Notices to abutters (receipt of application, workshop and public hearing meetings) ($.75 each)
- Legal Ad in the Newspaper (% of total ad)
- Planning Review ($52.00 hour)
- Legal Review ($75.00 hour)
- Third Party Review (all outside reviews or analysis, eg. Traffic/Peer Engineer, are the responsibility of the applicant and will be assessed and billed separately)

VI. APPLICANT SIGNATURE

By digitally signing the attached document(s), you are signifying your understanding this is a legal document and your electronic signature is considered a ***legal signature*** per Maine state law.

I hereby certify that I am the Owner of record of the named property, or that the owner of record authorizes the proposed work and that I have been authorized by the owner to make this application as his/her authorized agent. I agree to conform to all applicable laws of this jurisdiction. In addition, if a permit for work described in this application is issued, I certify that the Planning Authority and Code Enforcement's authorized representative shall have the authority to enter all areas covered by this permit at any reasonable hour to enforce the provisions of the codes applicable to this permit.

This application is for a Map Amendment, Text Amendment, Conditional or Contract Rezoning review. It is not a permit to begin construction. An approved site plan, a Performance Guarantee, Inspection Fee, Building Permit, and associated fees will be required prior to construction. Other Federal, State or local permits may be required prior to construction, which are the responsibility of the applicant to obtain.

Signature of Applicant:	
Date:	11/10/2017

A R C H E T Y P E

January 2, 2018

Barbara Barhydt
Development Review Services Manager
Planning Division
389 Congress Street 4th Floor
Portland, ME 04101

Dear Ms. Barhydt,

We are proposing that the property located at 1006/1008 Congress Street be re-zoned from I-L to B-2.

The current zone, I-L is one that is designated to act as a buffer between neighboring residential zones and I-M or I-H zones allowing for uses that are low intensity in nature and therefore compatible with neighboring residences.
B-2 is a zone designated for mixed uses, including commercial, housing and services that serve the adjoining neighborhoods. This zone provides a large range of uses, with an ideal location including along arterials that are accessible by cars, pedestrians and bicycles.

By both the nature of the existing building and Portland's Comprehensive Plan, the B-2 zone seems a much better fit for the address in discussion.

The existing building is a beautiful Captain's House and barn built in the late 1800s with an addition that was added around the 1970s. Being able to keep the existing structure would be the sustainable approach. The interior spaces are smaller and want to remain so due to the nature of the masonry structure therefore being ill-suited to any industrial use.

The site sits along Congress Street where the street acts as a major connector between isolated R-6 zones and a large B-2 zone. The street is already heavily used by vehicles. By adding mixed-use at the site, which has accessible sidewalks in place, pedestrian use would be encouraged. Westfield Street is also important in the discussion because it has been designated as part of the Portland Trail system. Currently the area does not read as an inviting trail system, but by adding the proposed ability for mixed-use, the building could better serve and enhance the trail.

While the I-L zone is designed to be compatible, it seems better fitting with the Comprehensive Plan and more important that a site be zoned as B-2. It is located at an intersection joining residences, business, vehicular and pedestrian traffic. As B-2 1006 Congress Street could serve its surroundings and help to encourage a healthy and diverse neighborhood while also providing the opportunity for new and relocated businesses bringing with them jobs.

Sincerely,

William K. Hopkins
Registered Architect

48 Union Wharf, Portland, Maine 04101 (207) 772–6022• Fax (207) 772–4056

Att. C

7/26/17 1:04pm

COPY

Book 34188 / Page 103

QUITCLAIM DEED
(with Covenant)

KNOW ALL PERSONS BY THESE PRESENTS, that, **DELTA REALTY LLC**, a Maine limited liability company with a principal place of business and mailing address of 380 Warren Avenue, Portland, Maine 04103, for consideration paid, grants to **1006 CONGRESS STREET, LLC**, a Maine limited liability company, with a principal place of business and mailing address of 1550 Sunset Ridge Drive, Laguna Beach, California 92651, with **QUITCLAIM COVENANT**, the land and improvements in the City of Portland, County of Cumberland and State of Maine, bounded and described as follows:

A certain lot or parcel of land, with the buildings thereon, situated in Portland, County of Cumberland and State of Maine, on the southerly side of Congress Street, being part of the homestead lot formerly owned and occupied by Frederick W. Clark, late of said Portland, deceased, bounded and described as follows:

Commencing at a point on the westerly side of said, homestead on a right-of-way called Westfield Street, formerly Cumberland Place, one hundred eighty-four and five tenths (184.5) feet northerly from the rear line of said lot; thence by the westerly side of said lot bounding on the said right-of-way one hundred thirty-one and five tenths (131.5) feet to Congress Street; thence southeasterly by said Congress Street one hundred fourteen and two tenths (114.2) feet to an angle; thence continuing southeasterly by said Congress Street two and eight tenths (2.8) feet to a stake; thence South forty-five degrees twenty-four minutes (45° 24') West by land now or formerly of Mary E. McKenney one hundred eighty-seven and sixty-five one hundredths (187.65) feet to a stake at a point distant one hundred eighty-four and five tenths (184.5) feet northerly in a perpendicular line from said rear line of said homestead lot; thence on a line parallel with the rear line of said Homestead lot North thirty degrees twenty-five minutes (30° 25') West one hundred and fifty-two and five tenths (152.5) feet, to the point of beginning.

Also, a right-of-way in common with others over so much of the thirty (30) foot strip of land as adjoins the premises hereby conveyed on the rear, said way extending to Westfield Street, together with a right-of-way in common with others in Westfield Street.

Being the same premises conveyed to Delta Realty LLC by Quitclaim Deed from the Deliverance Center, dated November 9, 2015 and recorded in the Cumberland County Registry of Deeds in Book 32723, Page 215.

IN WITNESS WHEREOF, Delta Realty LLC has caused this instrument to be signed and sealed in its company name by Andrea E. Girard, its Manager, thereunto duly authorized this 26th day of July, 2017.

Delta Realty LLC

Witness

By: Andrea E. Girard
Andrea E. Girard
Title: Manager

STATE OF MAINE
COUNTY OF CUMBERLAND, ss.

July 26, 2017

Then personally appeared before me the above named Andrea E. Girard, Manager of Delta Realty LLC, and acknowledged the foregoing instrument to be her free act and deed in her said capacity, and the free act and deed of Delta Realty LLC.

~~Notary Public~~/Attorney at Law
Andre Duchette, Bar No. 9872

Stantec Consulting Services Inc.
482 Payne Road Scarborough Court, Scarborough ME 04074-8929

Att. D

April 11, 2018

Ms. Shukria Wiar, Planner
Development Review Coordinator
City of Portland – Planning Authority
389 Congress Street
Portland, ME 04101

Subject: Application for Rezoning – 1006 Congress Street
Applicant: 1006 Congress LLC

Dear Shukria:

Stantec is assisting the applicant in their request for rezoning of the property at 1006 Congress Street. We have received your email transmission of April 6, 2018 and offer the following information related to the relayed questions.

Comment #1 How is the circulation and parking handled for the site?

Response: The intent is that the site's primary access will be off Westfield Street, as it currently exists today. Basically, there is a poorly defined curb opening along Westfield that allows vehicles to enter the rear of the property for parking etc. This appears to be the primary historic site access. There is also an existing curb opening along Congress Street that appears to offer very limited use to the property. That curb opening also appears to allow for limited access to the neighboring property, used by Atlantic Hardwoods for access to their sawdust collection equipment. Moving forward the primary site plan objective is to maintain the Westfield Access for two-way vehicle movements. The site plan also contemplates a one-way directional movement from the rear of the site onto Congress Street. Congress Street in one-way inbound at this location, so vehicle exiting movements will be right turning only. The site plan contemplates traditional 90-degree parking at the rear of the building and some parallel spaces along the drive exiting onto Congress Street.

Comment #2 Is that a shared access way to the rear or a street of some type?

Response: The survey plan by Owen Haskell Inc identifies a 30' wide R.O.W. labeled as Cumberford Place. To the best of our understanding this ROW is not a publicly accepted way nor has it in the past been constructed as a City Street etc. According to the deeds for both the applicant's property at #1006 Congress and the Fitzgerald property (TM 76-A-26), each property has access rights to the 30' wide ROW and thus over time each owner has made use of this space for access from Westfield Street. Copies of the property deeds accompany this letter.

Comment #3 What is the status of Cumberland Place and does the owner have rights in it?

Response: See previous response and accompanying deeds which show evidence of the owner's rights to use the ROW for access from Westfield. We have purposely shown on the concept plan an access driveway only and not any parking, given the shared rights between the property owners. The proposed zoning request to B-2 is likely to provide increased opportunity for business services to the offered on the property, and the Westfield Street access seems like an ideal condition, thereby affording only limited exiting vehicle movements onto Congress Street.

Comment #4: We also need to analyze the surrounding uses and zones and how is the rezone meeting the Comprehensive plan?

Response:

The following is a brief summary of the existing zoning patterns in the vicinity of the site as identified by the zoning map information contained in the original application:

1. The site is currently located in the Industrial Low Impact Zone (IL), which is defined by Congress Street to the north, Westfield Street back to the Fore River Parkway to the west and south and the Maine Central Rail corridor to the east. Land uses include the Cumberland County Correctional Facility, A Cross Fit Training facility, Atlantic Hardwoods, and Bunker Brewing at the end of Westfield Street. Paulins Tire and Auto Care is also located on the west side of Westfield Street, and Fitzgerald Tile is located south of the subject site on Westfield Street, within the IL zone.
2. Within the site vicinity there are two R6 zones principally defined by single family homes or apartments. These are located within the area bounded by Park Avenue and Congress Street or by Frederic Street westerly to the Highway.
3. Other land north of Congress Street over to Park Street and easterly to the St. John Street/Valley Street neighborhood is zoned as B-2 and is characterized by various Businesses, including medical offices, motels, shops, retail, restaurants and related business uses.
4. Contract Zone 31 is located at the end of Frederic Street and is associated with a housing development.

The original application cover letter from Archetype PA, dated January 2, 2018 provides a brief analysis of the requested zoning change to B-2 and findings regarding compliance with the Comprehensive plan. Given the breadth of B-2 zoning area to the north and east of the site as well as the character of the existing building within the subject property, it is our opinion that the requested zoning change will result in a wider opportunity of land use for the site. This then is consistent with the comprehensive plan goals of complete neighborhoods. As defined, the B-2 Zone is to provide a broad range of goods and services and general businesses with a mixture of large and small buildings such as grocery stores, shops and services located in a major shopping centers and along arterial streets. Such establishments should be readily accessible by automobile, by pedestrians and by bicycle. Development in the B-2 zone should relate to the surrounding neighborhoods by design, orientation, and

circulation patterns. We believe that the site's location off Congress Street and the existing proximity of B-2 zoning areas near to the subject site, make for a reasonable and rational approach for this re-zoning request.

If you have any questions with regards to the information submitted, please contact our office.

Sincerely,

STANTEC CONSULTING SERVICES INC.
Stephen Bushey, PE
Associate
Phone: 207-887-3478
Fax: 207-883-3376
Stephen.Bushey@stantec.com

c: Jennifer Lauren Packard, 1006 Congress LLC
Bill Hopkins, Archetype PA

V:\1953\resource\fst\Admin Resources\PROPOSALS\Stantec Proposals\1008 Congress Street Portland\Zoning application\ltr#1_Wiar_rezone-app_20180410.docx

QUITCLAIM DEED
(with Covenant)

KNOW ALL PERSONS BY THESE PRESENTS, that, **DELTA REALTY LLC**, a Maine limited liability company with a principal place of business and mailing address of 380 Warren Avenue, Portland, Maine 04103, for consideration paid, grants to **1006 CONGRESS STREET, LLC**, a Maine limited liability company, with a principal place of business and mailing address of 1550 Sunset Ridge Drive, Laguna Beach, California 92651, with **QUITCLAIM COVENANT**, the land and improvements in the City of Portland, County of Cumberland and State of Maine, bounded and described as follows:

A certain lot or parcel of land, with the buildings thereon, situated in Portland, County of Cumberland and State of Maine, on the southerly side of Congress Street, being part of the homestead lot formerly owned and occupied by Frederick W. Clark, late of said Portland, deceased, bounded and described as follows:

Commencing at a point on the westerly side of said, homestead on a right-of-way called Westfield Street, formerly Cumberland Place, one hundred eighty-four and five tenths (184.5) feet northerly from the rear line of said lot; thence by the westerly side of said lot bounding on the said right-of-way one hundred thirty-one and five tenths (131.5) feet to Congress Street; thence southeasterly by said Congress Street one hundred fourteen and two tenths (114.2) feet to an angle; thence continuing southeasterly by said Congress Street two and eight tenths (2.8) feet to a stake; thence South forty-five degrees twenty-four minutes (45° 24') West by land now or formerly of Mary E. McKenney one hundred eighty-seven and sixty-five one hundredths (187.65) feet to a stake at a point distant one hundred eighty-four and five tenths (184.5) feet northerly in a perpendicular line from said rear line of said homestead lot; thence on a line parallel with the rear line of said Homestead lot North thirty degrees twenty-five minutes (30° 25') West one hundred and fifty-two and five tenths (152.5) feet, to the point of beginning.

Also, a right-of-way in common with others over so much of the thirty (30) foot strip of land as adjoins the premises hereby conveyed on the rear, said way extending to Westfield Street, together with a right-of-way in common with others in Westfield Street.

Being the same premises conveyed to Delta Realty LLC by Quitclaim Deed from the Deliverance Center, dated November 9, 2015 and recorded in the Cumberland County Registry of Deeds in Book 32723, Page 215.

IN WITNESS WHEREOF, Delta Realty LLC has caused this instrument to be signed and sealed in its company name by Andrea E. Girard, its Manager, thereunto duly authorized this 26th day of July, 2017.

MAINE REAL ESTATE TAX PAID

Delta Realty LLC

Witness

By: Andrea E. Girard
Andrea E. Girard
Title: Manager

STATE OF MAINE
COUNTY OF CUMBERLAND, ss. July 26, 2017

Then personally appeared before me the above named Andrea E. Girard, Manager of Delta Realty LLC, and acknowledged the foregoing instrument to be her free act and deed in her said capacity, and the free act and deed of Delta Realty LLC.

~~Notary Public~~/Attorney at Law
Andre Duchette, Bar No. 9872

Received
Recorded Register of Deeds
Jul 26,2017 01:04:24P
Cumberland County
Nancy A. Lane

Know All Men by these Presents,

That Riverside Realty Corporation ~~Company,~~

a corporation organized and existing under the laws of the State

of Maine and located at Portland

in the County of Cumberland and State of Maine

in consideration of One Dollar and other valuable considerations,

paid by Mary E. Fitzgerald of Somerville, and John J. Mulkerin of Arlington, County of Middlesex, Commonwealth of Massachusetts, Trustees under Declaration of Trust dated the 1.th day of October, 1967, said Trust Agreement to be recorded herewith,

the receipt whereof it does hereby acknowledge, does hereby give, grant, bargain, sell and convey, unto the said

Mary E. Fitzgerald and John J. Mulkerin, Trustees as aforesaid,

their heirs and successors assigns forever,

a certain lot or parcel of land with the buildings thereon, situated in Portland, County of Cumberland and State of Maine, being a part of the Homestead lot of F. W. Clark, bounded and described as follows: Commencing at the southwesterly corner of said Homestead lot on a right-of-way called Cumberford Place, at the easterly corner of land sold by the said F. W. Clark to Franklin J. Rollins, and running northerly by the westerly line of said Homestead lot and by said right-of-way, one hundred fifty-four and five tenths (154.5) feet; thence easterly on a line parallel with the rear line of said Homestead lot, to the easterly line of said Homestead lot, at a right-of-way called Ogdensburg Street; thence southerly by the easterly line of said Homestead lot and on said right-of-way to the rear line of said lot; thence by the rear line of said lot, by said land sold to said Rollins, to the point of beginning.

Also, a right-of-way in common to a passageway thirty (30) feet wide adjoining the above-described lot on the north, running from the westerly side of said lot to the easterly side of said lot. Also, a right-of-way in common as reserved by said Frederick W. Clark on the easterly and westerly side of said Homestead lot, running from Congress Street to the rear of said Homestead.

This conveyance is made subject to a mortgage from the grantor herein to the Union Mutual Life Insurance Company dated October 15, 1971 and being recorded in Volume 3195, Page 805, Cumberland County Registry of Deeds on which there is owed the principal sum of $46,005.25, which said mortgage and the debt thereby secured the grantees herein assume and agree to pay and assume and agree to abide thereby all according to the terms thereof as a part of the consideration of this deed.

This conveyance is further made subject to a lease to the A. B. Dick Company of New England, Inc., which said lease and the interest in the grantor therein have been assigned to the grantees herein by Assignment of even date herewith.

Real estate taxes assessed against the aforedescribed premises by the City of Portland in contemplation of law as of April 1, 1973 shall be pro-rated between the grantor and grantees herein as of the date of delivery of this deed.

Being the same premises conveyed to the grantor herein by deed of Millard F. Coffin dated July 23, 1969 and recorded in Cumberland County Registry of Deeds in Book 3096, Page 193.

To have and to hold the aforegranted and bargained premises with all the privileges and appurtenances thereof to the said Mary E. Fitzgerald and John J. Mulkerin, Trustees as aforesaid, their heirs successors and assigns, to them and their use and behoof forever.

And the said Grantor Corporation does hereby COVENANT with the said Grantees, their heirs successors and assigns, that it is lawfully seized in fee of the premises, that they are free of all incumbrances; except as aforesaid;

that it has good right to sell and convey the same to the said Grantees to hold as aforesaid; and that it and its successors, shall and will WARRANT AND DEFEND the same to the said Grantees, their heirs successors and assigns forever, against the lawful claims and demands of all persons, except as aforesaid.

In Witness Whereof, the said Riverside Realty Corporation Company has caused this instrument to be sealed with its corporate seal and signed in its corporate name by Edward S. Boulos, Jr., its President , ~~its Treasurer~~ thereunto duly authorized, this 31st day of December in the year one thousand nine hundred and seventy ~~three~~

Signed, Sealed and Delivered in presence of

RIVERSIDE REALTY CORPORATION

~~Company~~

By

Its President ~~Treasurer~~

CORPORATE SEAL

State of Maine.

County of Cumberland ss. December 31 1973

Then personally appeared the above named Edward S. Boulos, Jr. President ~~Treasurer~~ of said Grantor Corporation as aforesaid, and acknowledged the foregoing instrument to be his free act and deed in his said capacity, and the free act and deed of said corporation.

Before me,

Justice of the Peace.

JAN 3 1974
REGISTRY OF DEEDS, CUMBERLAND COUNTY, MAINE
Received at 2 H 36 M P M, and recorded in
BOOK 3498 PAGE 38 Register

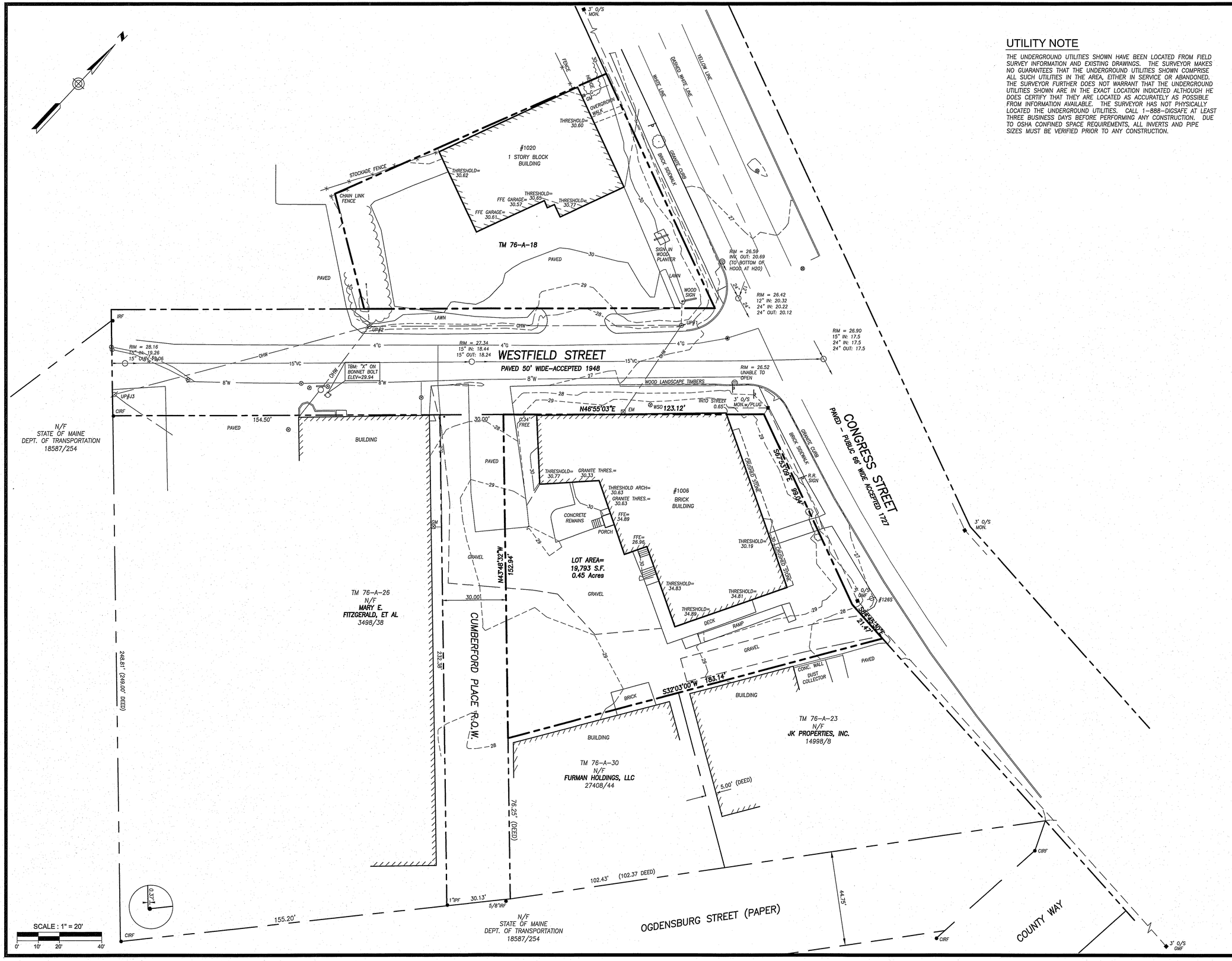

UTILITY NOTE

THE UNDERGROUND UTILITIES SHOWN HAVE BEEN LOCATED FROM FIELD SURVEY INFORMATION AND EXISTING DRAWINGS. THE SURVEYOR MAKES NO GUARANTEES THAT THE UNDERGROUND UTILITIES SHOWN COMPRISE ALL SUCH UTILITIES IN THE AREA, EITHER IN SERVICE OR ABANDONED. THE SURVEYOR FURTHER DOES NOT WARRANT THAT THE UNDERGROUND UTILITIES SHOWN ARE IN THE EXACT LOCATION INDICATED ALTHOUGH HE DOES CERTIFY THAT THEY ARE LOCATED AS ACCURATELY AS POSSIBLE FROM INFORMATION AVAILABLE. THE SURVEYOR HAS NOT PHYSICALLY LOCATED THE UNDERGROUND UTILITIES. CALL 1-888-DIGSAFE AT LEAST THREE BUSINESS DAYS BEFORE PERFORMING ANY CONSTRUCTION. DUE TO OSHA CONFINED SPACE REQUIREMENTS, ALL INVERTS AND PIPE SIZES MUST BE VERIFIED PRIOR TO ANY CONSTRUCTION.

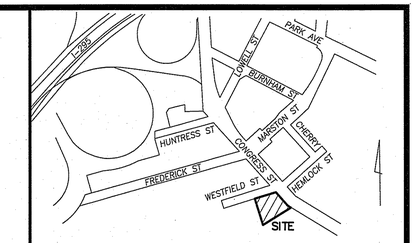

LOCATION MAP

N.T.S.

LEGEND

●	IRON PIPE OR ROD FOUND	═══	CURB
■	MONUMENT FOUND	—OHW—	OVERHEAD WIRES
⊘	UTILITY POLE	—W—	WATER LINE
○	MANHOLE	—G—	GAS LINE
⊠ EM/GM	ELECTRIC/GAS METER	—SS—	SANITARY SEWER
	SIGN	IPF/IRF	IRON PIPE OR ROD FOUND
	CATCH BASIN	CONC.	CONCRETE
⊗	WATER VALVE OR SHUTOFF	GMF	GRANITE MONUMENT FOUND
		N/F	NOW OR FORMERLY
		000/000	DEED BOOK / PAGE

PLAN REFERENCES

1. "BOUNDARY SURVEY ON 12-24 WESTFIELD STREET, PORTLAND, MAINE MADE FOR FITZGERALD TITLE" DATED 12/28/2015 BY OWEN HASKELL, INC.

2. "ALTA/ACSM LAND TITLE SURVEY, 17 WESTFIELD STREET, PORTLAND, CUMBERLAND COUNTY, MAINE MADE FOR WESTFIELD STREET REALTY LLC" JANUARY 8, 2014 BY OWEN HASKELL, INC.

3. "PLAN OF PROPERTY IN PORTLAND MADE FOR GENERAL BAKING COMPANY" BY E.C. JORDAN DATED MARCH 1948 FILED WITH THE CITY ENGINEERS OFFICE PLAN 462/25.

4. "PLAN OF PROPERTY IN PORTLAND, MAINE MADE FOR ROBERT R. JANKES CONSTRUCTION CO. BY H.I. & E.C. JORDAN DATED 12-27-63 REVISED JAN. 11, 1964.

GENERAL NOTES

1. OWNER OF RECORD: 1006 CONGRESS STREET LLC
1550 SUNSET RIDGE DRIVE
LAGUNA BEACH, CA 92651
TAX MAP 76 BLOCK A LOT 22
C.C.R.D. BOOK 34188 PAGE 103

2. BEARINGS ARE BASED ON MAINE STATE PLANE COORDINATE SYSTEM MAINE WEST NAD83. CITY MONUMENTS AT "D" STREET AND "A" STREET PROVIDED BY THE CITY OF PORTLAND ENGINEERING DEPARTMENT.

3. ELEVATIONS ARE BASED ON NGVD 1929. CITY BENCHMARK 3' O/S MONUMENT AT ST. JOHN STREET AND "C" STREET ELEVATION 37.56.

4. BOUNDARY LINES SHOWN FOR TM 76-A-18 TAKEN FROM PLAN REFERENCE 4, NOT VERIFIED BY OWEN HASKELL, INC.

CERTIFICATE

OWEN HASKELL, INC. HEREBY CERTIFIES THAT THIS PLAN IS BASED ON, AND THE RESULT OF, AN ON THE GROUND FIELD SURVEY AND THAT TO THE BEST OF OUR KNOWLEDGE, INFORMATION AND BELIEF, IT CONFORMS TO THE BOARD OF LICENSURE FOR PROFESSIONAL LAND SURVEYORS CURRENT STANDARDS OF PRACTICE.

JOHN W. SWAN, PLS NO. 1038

DATE

REV. 1	01-24-18	TAX MAP LOT 76-A-18 & TOPOGRAPHY ADDED

Boundary Survey
At
1006 & 1020 Congress St., Portland, Maine
Made for
PK Realty Management Investments
380 Riverside Street, Portland, Maine

OWEN HASKELL, INC.
PROFESSIONAL LAND SURVEYORS
390 U.S. ROUTE ONE, UNIT 10, FALMOUTH, MAINE 04105

DRAWN BY:	RS / JLW	DATE:	NOV. 16, 2017	JOB NO.	2017-315 P
CHECKED BY:	EBC / JWS	SCALE:	1" = 20'	DRWG. NO.	1

UTILITY NOTE

THE UNDERGROUND UTILITIES SHOWN HAVE BEEN LOCATED FROM FIELD SURVEY INFORMATION AND EXISTING DRAWINGS. THE SURVEYOR MAKES NO GUARANTEES THAT THE UNDERGROUND UTILITIES SHOWN COMPRISE ALL SUCH UTILITIES IN THE AREA, EITHER IN SERVICE OR ABANDONED. THE SURVEYOR FURTHER DOES NOT WARRANT THAT THE UNDERGROUND UTILITIES SHOWN ARE IN THE EXACT LOCATION INDICATED ALTHOUGH HE DOES CERTIFY THAT THEY ARE LOCATED AS ACCURATELY AS POSSIBLE FROM INFORMATION AVAILABLE. THE SURVEYOR HAS NOT PHYSICALLY LOCATED THE UNDERGROUND UTILITIES. CALL 1-888-DIGSAFE AT LEAST THREE BUSINESS DAYS BEFORE PERFORMING ANY CONSTRUCTION. DUE TO OSHA CONFINED SPACE REQUIREMENTS, ALL INVERTS AND PIPE SIZES MUST BE VERIFIED PRIOR TO ANY CONSTRUCTION.

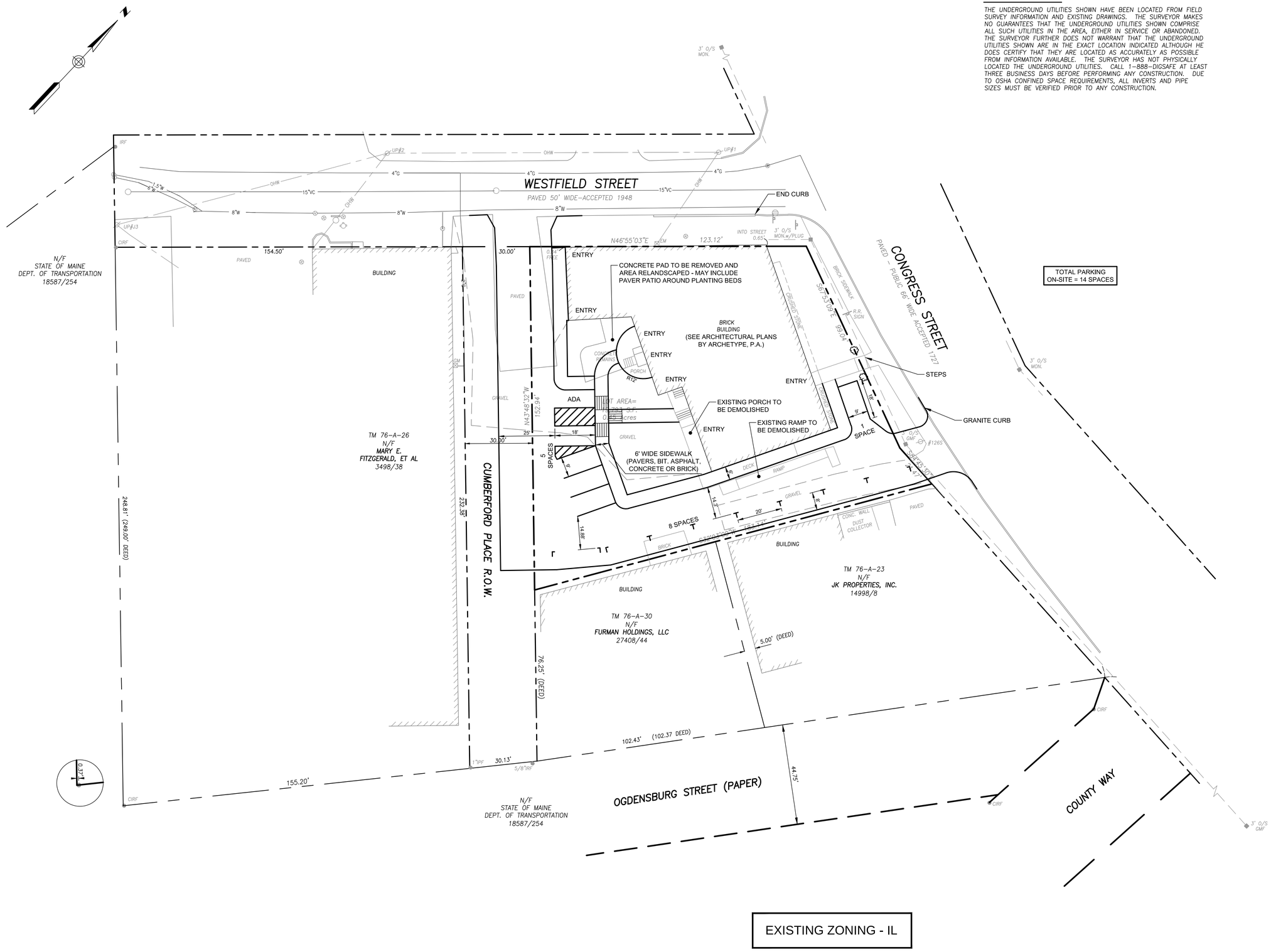

Stantec
482 Payne Road Scarborough Court
Scarborough, Maine 04074-8929
Tel. 207.883.3355
www.stantec.com

Copyright Reserved

The Contractor shall verify and be responsible for all dimensions. DO NOT scale the drawing - any errors or omissions shall be reported to Stantec without delay.
The Copyrights to all designs and drawings are the property of Stantec. Reproduction or use for any purpose other than that authorized by Stantec is forbidden.

Consultants

Notes

Revision	By	Appd.	YY.MM.DD
1.	-	-	-
2.	-	-	-
3.	-	-	-

File Name: 1006_congress_base	CDD	SRB	SRB	17.12.08
	DWN.	CHKD.	DSGN.	DATE

Permit-Seal

Client/Project

PK Realty Management Investments
380 Riverside Street, Portland, Maine

1006 Congress Street

PORTLAND, MAINE

Title

PRELIMINARY SITE PLAN

Project No. 195389000

Scale 1" = 20'

Sheet

C-1

PRELIMINARY - NOT FOR CONSTRUCTION

V:\195389\resource\fs\Admin Resources\PROPOSALS\Stantec Proposals\1006 Congress Street Portland\Site Plan Concept\dwg\1006_congress_base.dwg cddube 12/11/2017 5:35 PM

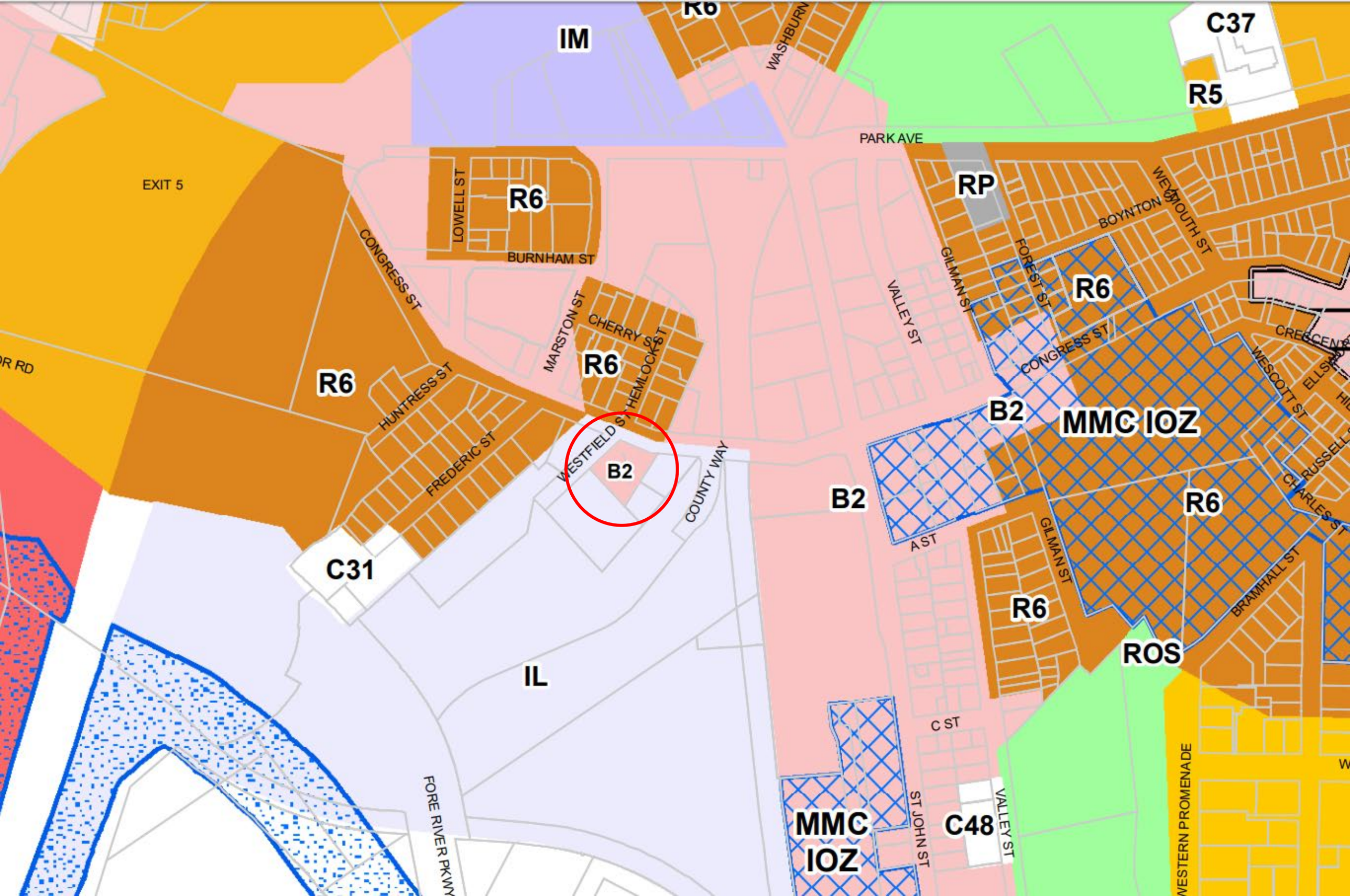
IM
R6
WASHBURN
C37
R5
PARK AVE
EXIT 5
LOWELL ST
R6
BURNHAM ST
CONGRESS ST
RP
BOYNTON
WEYMOUTH ST
GILMAN ST
FOREST ST
R6
VALLEY ST
MARSTON ST
CHERRY ST
HEMLOCK ST
R6
R6
HUNTRESS ST
FREDERIC ST
WESTFIELD ST
B2
COUNTY WAY
CONGRESS ST
CRESCENT
WESCOTT ST
ELLSW
B2
MMC IOZ
R6
CHARLES ST
RUSSELL
A ST
GILMAN ST
R6
BRAMHALL ST
ROS
C31
IL
C ST
FORE RIVER PKWY
MMC IOZ
ST JOHN ST
C48
VALLEY ST
WESTERN PROMENADE

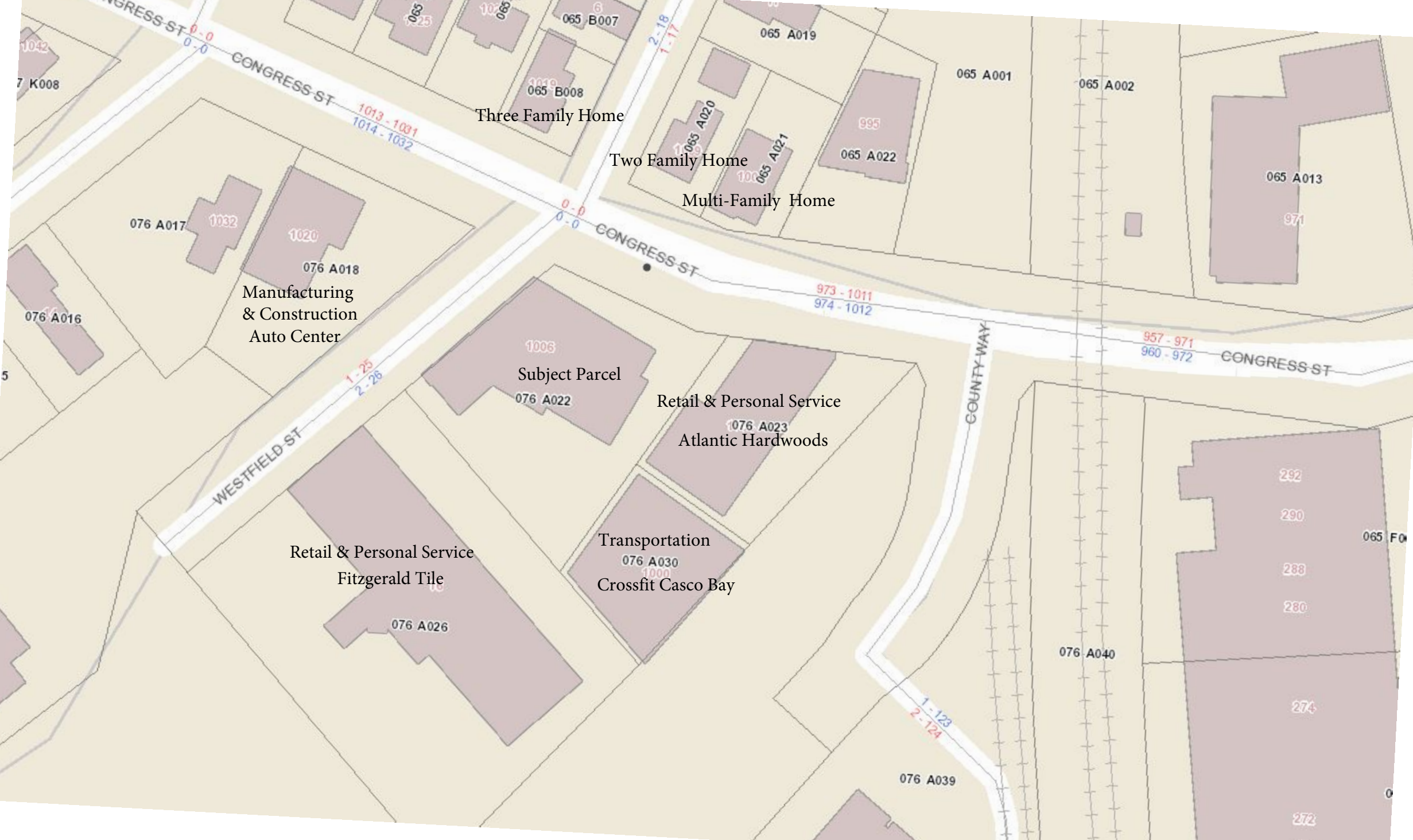
CONGRESS ST
0 - 0
0 - 0
1013 - 1031
1014 - 1032
065 B007
065 B008
Three Family Home
2 - 18
1 - 17
065 A019
065 A020
065 A021
Two Family Home
Multi-Family Home
065 A022
995
065 A001
065 A002
065 A013
971
0 - 0
0 - 0
973 - 1011
974 - 1012
957 - 971
960 - 972
CONGRESS ST
COUNTY WAY
076 A017
1032
1020
076 A018
Manufacturing
& Construction
Auto Center
076 A016
1006
Subject Parcel
076 A022
Retail & Personal Service
076 A023
Atlantic Hardwoods
1 - 25
2 - 26
WESTFIELD ST
Retail & Personal Service
Fitzgerald Tile
076 A026
Transportation
076 A030
1000
Crossfit Casco Bay
1 - 123
2 - 124
076 A039
076 A040
292
290
288
280
274
272
065 F

PLANNING BOARD REPORT

PORTLAND, MAINE

LAND USE CODE TEXT AMENDMENTS – SECTION 14-403. STREET ACCESS

City of Portland, Applicant

Submitted to: Chair Sean Dundon and Portland Planning Board Public Hearing Date: May 8, 2018	Prepared by: Barbara Barhydt, Development Review Services Manager Date: May 4, 2018

I. INTRODUCTION:

Section 14-403 Street Access is contained within Division 24, Use Regulations and Exceptions of the Land Use Code. It applies to both developed and undeveloped streets by establishing minimum street requirements to be met prior to obtaining building permits. The goals of the text amendments are to increase the predictability and clarity of Section 14-403 while managing the competing needs of new housing construction, sustainability of infrastructure and public safety. Maintenance of public roadways and related infrastructure is a significant expense for the City and one where our priority must be on addressing deferred maintenance and existing needs. As required by the Portland's Plan 2030, the city must try to find a balance between the sometimes competing needs of a sustainable, equitable, secure and connected community. The proposed amendments seek to achieve that balance by allowing development on undersized built streets that meet minimum standards for emergency services and to continue to require undeveloped streets to be improved to meet current city street standards. The substance of proposed amendments remains consistent with current policy, while seeking to simplify and clarify the regulations.

The legislative history and public purposes of the section are outlined in a memorandum prepared by Anne Torregrossa, Associate Corporation Counsel (Attachment 1). As stated in Anne Torregrossa's memo, "The City Manager and staff recognized the requirements in Sec 14-403 limited development even on City-accepted streets, and also that the section was complicated, difficult to apply, and duplicated many of the rules and requirements that are now part of the site plan review process." Staff members from Corporation Counsel, Public Works, Fire, Permitting and Inspections, and Planning collaborated on the proposed rewrite of Section 14-403 "...in an attempt to streamline and clarify the requirements of the section...."

The basic elements of the proposal are as follows:

1- Simplifies and clarifies the language in Section 14-403
2- Reduces the minimum width required for the construction of new dwelling units on permanently paved and accepted streets from 35' to 25' for one and two-unit structures and 28' for other buildings

A workshop on the proposed text amendments was held with the Planning Board on March 22, 2018 and the material was presented at the Council's Housing Committee on March 28, 2018. The City is seeking the Planning Board's recommendation to City Council regarding the proposed amendments.

II. NOTICE AND PUBLIC COMMENT

This item was noticed in the Legal Ad that appeared in the Portland Press Herald on April 30 and May 1, 2018. It was posted on the City's web page on April 26th and sent to interested citizens through Notify Me on that same date. The public comments received to date are included in the packet under public comment, PC1 – PC6. At the workshop, 5 members of the public spoke. Several questioned the proposed regulations that pertain to accepted streets. Other comments addressed the expense of putting in a street and how it negatively impacts the cost of creating single family housing. One person sought to have consistency for all street proposals and another asked about creative financing to facilitate the development of single family homes.

III. PROPOSED TEXT AMENDMENTS

The proposal is to replace the existing Section 14-403, Street Access, with a rewritten section. Please refer to Attachment 1 (Torregrossa memo) for a summary of the amendments and Attachment 2 for the proposed ordinance text. A comparison of the existing and proposed language is below.

Current Section 14-403 Language	Proposed Section 14-403 Language
a) *In general.* No building intended for use as a habitation shall be erected on a lot which has its only street frontage on a street less than thirty-five (35) feet wide. No building shall be erected on a lot, except on the islands in Casco Bay, which does not abut a street meeting the minimum requirements for street improvements set forth in this section. For purposes of this section, street shall be as defined in section 14-47[1], except that a dedicated street which may no longer be accepted due to lapse of time and an accepted street which may have been discontinued by abandonment shall also be deemed to be streets, provided that an applicant for a building permit respecting any lot abutting such street shall, without compensation or claim for damages, and at his own cost and expense, first submit to the building authority (a) a deed from the owner of such lot conveying to the city all his right, title and interest in and to such street or any portion thereof; and (b) an agreement by	A building or structure may only be constructed or moved on a lot, or a dwelling unit added to a lot, where one of the following is met. (a) *Permanently paved and accepted streets or island streets.* The lot has the minimum required frontage on either (i) a permanently paved and accepted City street that meets the minimum clear paved width, measured from the edge of the pavement, excluding sidewalks, or (ii) on an existing street on an island in Casco Bay that meets the minimum clear built width, measured from the edges of the built street. The minimum clear width shall be as follows: 1. For one- or two-family dwellings – 25'; 2. For all other buildings – 28'.

[1] Street: A public way established by or maintained under public authority, or a way dedicated to the use of the public and appearing on the official map of the city.

such owner forever releasing the city from any and all claims for damages for the laying out and taking of such street and indemnifying the city against any and all other such claims, both such instruments to be executed and in recordable form acceptable to the corporation counsel and to encumber and run with the land.	These widths may be reduced with the written approval of the Fire Chief, and the Public Works Director where, in their shared and final determination, the ability to provide City services will not be unreasonably impaired.
(b) *Minimum requirements for street improvements on unimproved and improved but unpaved streets.* For a lot abutting any portion of a street which is unimproved or improved but not permanently paved, that portion which abuts the lot, and any like portion between such portion and the nearest permanently paved street or portion which is the principal access to such lot, shall be improved, including sewers, storm drains, pavements, curbs and, if located on a designated school walking route, sidewalks, in accordance with the minimum technical standards promulgated by the public works authority pursuant to section 14-498(a) of article IV of this chapter. Where the nearest permanently paved street does not have granite curbing, the public works authority may waive the requirement of curbing under this section, if it determines that an acceptable alternative drainage plan will be provided. Prior to the issuance of a building permit for erection of a building on a lot abutting any portion of a street which is unimproved or improved but not permanently paved, the following shall occur: (1) A plan of the street improvements required by this section shall be submitted to the public works authority; and (2) upon determination by the public works authority that the plan meets the street improvement requirements established by this subsection, a performance guarantee and inspection fee for said improvements shall be submitted to the city as set forth in section 14-501. Also as set forth in section 14-501, a one-year defect bond shall be tendered to the city prior to release of the performance guarantee required hereby. The provisions of this subsection (b) shall not apply to the erection of any single-family dwelling on any lot where the owner of the lot establishes that he or she was the owner of that same lot on November 19, 1984, and at all times thereafter, and states his or her intention under oath to make the structure his or her personal residence.	(b) *Streets to be upgraded in connection with development.* The owner or developer of the lot will do all of the following in connection with the development of that lot: 1. Upgrade the street, between the lot and the nearest permanently paved and accepted City street, to meet the standards adopted elsewhere in this Code, including those adopted by the public works authority and the planning authority pursuant to this Code; 2. Take all necessary steps under Chapter 25, Article III, of this Code to dedicate the upgraded portion of the street to the City for acceptance, including a waiver of any claim for damages resulting from the acceptance; and 3. Obtain site plan approval for the work required under this subsection.
I *Exceptions.* The requirements of this section shall not apply to the following city streets upon their construction by the public works authority to such standards as are determined by the authority to be the most feasible: Dingley Court; Morgan Court.	(c) *Other exceptions.* The building or structure is one of the following: 1. An accessory building; or 2. Part of a Planned Residential Unit Development.

IV. HOUSING COMMITTEE and PLANNING BOARD WORKSHOP COMMENTS

The Housing Committee met on March 28th to discuss the proposed amendments. The Committee is composed of Councilors Duson, Ali and Cook. Councilor Ray also attended the meeting. The Committee is seeking the Board's recommendation to be submitted to the City Council and the Committee is not forwarding a separate recommendation. The Housing Committee did request additional information from the staff, which includes:

a) Map of unaccepted streets and adjoining developable land;
b) Cost estimates if the City were to accept and improve those streets;
c) Any projects in recent history that have <u>not</u> moved forward because of the requirements in 14-403; and
d) Clarification of the projects in the chart of street extensions that are improved streets under 14-403 and those that are new subdivision streets.

These requests are addressed below under the staff analysis.

The Housing Committee also made specific requests for the Planning Board's consideration:

a) With respect to unaccepted streets, specifically consider the fairness of requiring one lot owner to pave the entire street, benefiting the remaining lot owners; and
b) With respect to accepted streets, consider the impact of the minimum width requirements

At the March 22 Planning Board workshop, the question was raised whether the addition of a dwelling unit to a lot, as proposed, is too restrictive. In general, the Board supported forwarding the proposed amendments for a public hearing.

V. STAFF ANALYSIS

A. <u>Purpose of Section 14-403</u>

The proposed text amendments are intended to simplify and clarify the language of Section 14-403 Street Access, which is contained within Division 24, Use Regulations and Exceptions of the Land Use Code. The section applies to both developed and undeveloped streets by establishing minimum street requirements to be met prior to obtaining building permits. There are built streets in Portland, particularly on the peninsula, that are narrow and do not meet city standards. There are also undeveloped streets, particularly off the peninsula, where property owners seek to develop. The proposed amendments address both situations by allowing development on undersized built streets that meet minimum standards for public safety access and continues to require undeveloped streets be improved to meet current city street standards. Staff members from Corporation Counsel, Public Works, Fire, Permitting and Inspections, and Planning collaborated on updating Section 14-403 to improve the clarity of the ordinance and retain the underlying public purposes of encouraging development were adequate public safety access is available without imposing significant new City expenses for street construction and maintenance. Again, the proposed text amendments seek to simplify and clarify Section 14-403, while retaining the substance of the current public policy.

B. Built Streets That Do Not Meet Standards

In terms of the specific amendments, subsection (a) address development on existing streets that are built, but do not meet today's standards. The current standards for a local street require a right-of-way width of 50 feet with a pavement width of 28 feet. There are streets, particularly on the peninsula and islands, that do not meet current dimensional standards and in some cases are inaccessible for emergency and public works vehicles. Recent development has occurred on some of these undersized streets, such as Tate and Oak Streets. During those reviews, staff members sought to ensure public safety with careful consideration of public safety access, parking regulations, and street improvements on a case by case basis.

The proposed text amendments are proposed to provide clearer and more transparent regulations for the built streets. The proposed revisions establish a minimum clear street width between curbs as follows:

> (d) The minimum clear width shall be as follows:
>
> 1. For one- or two-family dwellings – 25';
> 2. For all other buildings – 28'.
>
> These widths may be reduced with the written approval of the Fire Chief, and the Public Works Director where, in their shared and final determination, the ability to provide City services will not be unreasonably impaired.

Again, the intent is to be transparent about the minimum clear widths required for development to occur on such street. At the workshop, Acting Fire Chief Keith Gautreau noted that safe and adequate public safety access is vital to serve each new unit on a substandard street. The proposed waiver is intended to allow for flexibility or fairness within the city's built infrastructure, where both the Fire Chief and Public Works Director find that public services and public safety access are not unreasonably impaired. Thus, new development may occur on existing undersized developed streets that meet minimum requirements or where services and access can be achieved without being unreasonably impaired. However, the burden of meeting these criteria will be on the developer. This approach should help to clarify the standards and avoid issues that had previously not always become apparent until site plan review began on a project and substantial funds were expended by the applicant; while at the same time, allowing for certain flexibility from the city.

C. Unimproved Streets for New Development

Subsection (b) addresses streets that are unimproved for new development. It requires the street to be improved to current street standards by the applicant, which is consistent with the City's current policy. The intent is to provide adequate access for city services, while not burdening the tax base with street construction costs. This includes building streets within right-of-ways where no improvements have been made or only dirt and gravel surfaces exist. Since the adoption of Sec 14-403 over 30 years ago, new development along undeveloped streets requires an applicant to bring the road up to standards from where the existing street pavement ends and along the full extent of lot frontage.

The Department of Public Works is preparing a map of paper streets, which is expected in time for the hearing.. Many, but not all, paper streets are located off-peninsula with numerous abutting lots (both vacant and developed lots). At the workshop, Mr. McGovern noted that his property was part of a subdivision recorded in 1916 and his home was built in 1918. He has a pending application to upgrade Hingham Street to city standards. Section 14-403 addresses unimproved streets or dedicated and undeveloped right-of-ways by requiring streets to be upgraded to city standards in order to construct a new home or add a dwelling unit.

The Department of Public Works is preparing cost estimates for street construction, which will be available for the public hearing. Street construction costs can be prohibitive, particularly for small scaled projects or If the length of the street to be improved is significant. While a log of inquiries is not maintained, there have been inquiries about street extensions for development that have not been brought forward.

In response to the Housing Committee's question as to the equity of the 14-403 as applied to unaccepted and improved streets we would like to clarify that the only time an owner is required to build out the roadway is when they propose constructing a new dwelling. There is also no prohibition on their obtaining contributions from abutting owners who will benefit from the road. The requirement is only that the road be brought up to the legal standards before any additional housing units are brought online. There is no question there is substantial inconsistency with how service provision and residential constructions on unaccepted streets has been managed in Portland over the last century; however, the goals here is minimize the perpetuation of these practices not incentivize them.

D. Review Process

Street extensions under 14-403 are reviewed administratively under the site plan ordinance as either a Level I or Level II application. The level of review is based upon the amount of impervious surface area that is being added. The standards of review are the same for both applications. Briefly, the review process requires a survey stamped by a licensed surveyor and engineered plans for the street meeting the City's technical standards. Portland's Technical Manual contains the engineering specifications for streets, sidewalks, public utility installations, and stormwater management (http://www.portlandmaine.gov/756/City-Codes-Ordinances-Regulations-Maps). Over the past five years there have been five approved street extensions that are summarized in Table 1 below. Two applications are currently undergoing review and are also listed on the table 1. To address the Housing Committee's question of how many streets were vacant versus some level of improvement, this chart has been updated with this information.

Table 2 on the following page lists single family subdivisions approved over the past 5 years. Skylark is a subdivision that had paper streets, but the lots and streets were reconfigured to meet current standards. The other subdivisions created new street right-of-ways and lots. Under Portland's Subdivision Ordinance, recording plats cannot be recorded without posting a performance guarantee for the street infrastructure work to be completed.

Table 1: Approved& Pending Street Extensions within Dedicated Right of Ways under 14-403

All approved applications had a 50 foot wide ROW and a 28 foot wide pavement width

Street Name	Street Length	Turn Around	Granite Curbs	Side-walks	Development	Initial Condition	Status
Hingham	357	yes	seeking waiver	seeking waiver	5 lots with frontage and 2 side yards	gravel and vacant	Pending Review
Florida Ave	165	no-gravel road beyond	seeking waiver	seeking waiver	2 property ownes for 2 sf lots	gravel	Pending Review
Pomeroy	200	yes	yes		Single Family	vacant	Built
Gertrude	93	no-gravel road beyond	yes	waived	Single Family	gravel	Built
Hillcrest	200	no-gravel road beyond	no- open drainage	waived	Single Family	gravel	Built
Pamela	585	no- linked existing Pamela & Alice St	yes	yes	10 Single Family House Lots	vacant	Built
Motley	94	no- gravel road beyond	no-open drainage	waived	2 Single Family House Lots	gravel	Built
Van Vechten	584	no - gravel road beyond	no-open drainage	waived	4 House Lots	gravel	Approved

Table 2	Approved Subdivisions with New Streets or Street Extensions						
	All approved applications had a 50 foot wide ROW and a 28 foot wide pavement width						
Sudvision Name	Street Name	Street Length	Turn Around	Granite Curbs	Side-walks	Development	Status
Skylark Subdivision-Phase I	Skylark Drive	530	yes	yes	one	Phase I: 7 sf lots & 1 existing vacant lot, plus existing home	Phase I complete
Knight Farm	Abner Lane	445	yes	yes	one side	8 sf lots & 1 existing house lot w/ house	Under Construction
Brandy Lane Subdivision	Brandy Lane	970	yes	yes	one side	16 sf lots	Approved
Stroudwater Preserve-Phase 1	(not named yet)	2,074	yes	yes	one-side	47 lots	Under Construction
Stroudwater Preserve-Phase 2	(not named yet)	2,325	No/connects to streets	yes	one side	48 lots	Approved
Stroudwater Preserve-Phase 3	private road- PRUD	800	cul-de-sac	no	one	25 townhouses	Approved

E. Waivers

Under the present version of Section 14-403, an applicant may seek to have the sidewalk waived, if the street is not a school walking route and the curbing may be waived by the Public Works Director. The proposed draft eliminates the waiver language within Section 14-403, and instead allows waivers to be considered using provisions already established under the City Code. In regard to sidewalks and curbs, Section 14-506 Modifications in the Subdivision Ordinance establishes waiver criteria applied during subdivision and site plan reviews. The waiver criteria for curbs and sidewalks are excerpted below.

> Sidewalks-
>
> 1. There is no reasonable expectation for pedestrian usage coming from, going to and traversing the site.
> 2. There is no sidewalk in existence or expected within 1000 feet and the construction of sidewalks does not contribute to the development of a pedestrian oriented infrastructure.
> 3. A safe alternative-walking route is reasonably and safely available, for example, by way of a sidewalk on the other side of the street that is lightly traveled.
> 4. The reconstruction of the street is specifically identified and approved in the first or second year of the current Capital Improvement Program or has been funded through an earlier CIP or through other sources.
> 5. The street has been constructed or reconstructed without sidewalks within the last 24 months.
> 6. Strict adherence to the sidewalk requirement would result in the loss of significant site features related to landscaping or topography that are deemed to be of a greater public value.
>
> Curbing-
>
> 1. The cost to construct the curbing, including any applicable street opening fees, is in excess of 5% of the overall project cost.
> 2. The reconstruction of the street is specifically identified and approved in the first or second year of the current Capital Improvement Program or has been funded through an earlier CIP or through other sources.
> 3. The street has been rehabilitated without curbing in the last 60 months.
> 4. Strict adherence to the curb requirement would result in the loss of significant site features related to landscaping or topography that are deemed to be of a greater public value.
> 5. Runoff from the development site or within the street does not require curbing for stormwater management.
>
> In no event shall the waiver have the effect of creating potentially hazardous vehicle and pedestrian conflict or nullifying the intent and purpose and policies of the land development plan relating to transportation and pedestrian infrastructure and the regulations of this article.

Lastly, the exceptions listed in subsection (c) of Section 14-403 for Morgan and Dingley Court. Both of these streets are improved and narrower than today's standards with development on the adjoining lots. The proposal is to remove these streets from the exception list and instead apply the new provisions for any further development on these streets. The proposed draft does exempt accessory buildings, such as garages and sheds, and Planned Residential Unit Developments (PRUD) from 14-403. PRUDs have separate requirements for the construction and maintenance of the private street network serving the development.

VI. COMPREHENSIVE PLAN

The central vision of Portland's Plan 2030 is represented by the venn diagram demonstrating the integral interrelation of the community's core belief that Portland is equitable, sustainable, connected, dynamic,

authentic and secure. The vision conveys the message of the City's need to balance many competing needs to assure the advance of the vision as a unified concept. In this instance, that the City's goals for housing production be balanced with needs for connectivity of the street grid, sustainability of infrastructure and the ability to maintain that infrastructure, and security in the sense of public safety.

Portland's Plan 2030 has three goals under the Facilities and Services section that are relevant to this policy initiative. The goals are:

- Use planning and fiscal management to sustainably maintain a high level of service for existing infrastructure and programs.
- Coordinate infrastructure planning and investments with areas of greatest anticipated growth.
- Provide public safety, emergency response, and emergency management facilities and services that can effectively meet the needs of all residents.

As support for these goals there are three strategies and accompany actions that address the proposed amendments:

- Provide services to all residents
  - Ensure transparency and access to City services and facilities for all residents.
  - Operate City facilities and services in an efficient and effective manner that is responsive to all segments of the community.
- Develop asset management plans
  - Develop long-range asset management plans for public facilities in order to ensure that our limited public funds are maintained and investing in strategically.
- Plan for Fiscal Stability
  - Keep tax rate increases manageable and provide predictability and stability in tax rate increases while supporting City services and a stable labor force.
  - Make fiscal stability a factor in land use planning by considering both public investments and potential gains in the City's tax base when planning for a sustainable future for the city, while recognizing that not all land use decisions will be driven by the fiscal impacts of the development produced.

The policies and strategies of the Comprehensive Plan support a fix-it first approach to the extensive infrastructure within Portland. Portland seeks to provide quality public services and public safety for all residents. Thus, creating new infrastructure within the city is intended to be carefully evaluated, so that investments are strategic, sustainable, and manageable for the long-term responsibility of the City. The proposed amendments to Section 14-403 are proposed to provide clear regulations for street access for

private development that can be maintained effectively by the City without overburdening the Departments of Public Works and Fire.

The comprehensive plan also contains goals to increase housing. Two of the goals state the following:

- Increase, preserve, and modify the overall supply of housing city-wide to meet the needs, preferences and financial capabilities of all Portland residents.
- Encourage additional contextually appropriate housing density in and proximate to neighborhood centers, concentrations of services, and transit notes and corridors as a means of supporting complete neighborhoods.

The need for housing and affordable housing is clear in Portland. Again, the City is seeking to encourage housing where there are concentrations of services, transit and community facilities. Generally, the 14-403 road extensions support single family development in lower density neighborhoods. While this addresses the preferences for some Portland residents, the City is emphasizing more strategic investments that support higher levels of housing construction. Thus, the proposed amendments allow for private investments to occur for low density housing development that again can be served efficiently by the City without overburdening the tax base.

VII. STAFF RECOMMENDATION

The Planning Staff recommend a positive recommendation for the proposed amendments, which are intended to be clear and transparent regulations to provide adequate street access and public services for new development.

VIII. PROPOSED MOTION

On the basis of the material provided in this report, dated May 4, 2018, public testimony, a review of applicable policies, and other information, the Planning Board finds that the proposed text amendments to Division 24, Use Regulations and Exceptions of the Land Use Code., Section 14-403, Street Access, **[are or are not]** consistent with the Comprehensive Plan and **[recommends or does not recommend]** adoption of the proposed amendments to the City Council.

ATTACHMENTS:

1. Memorandum from Anne Torregrossa, Associate Corporation Counsel, March 5, Attachments to the memo include:
    1. Joe Gray memo, 1984
    2. Gary Wood memo, 2012
2. Proposed Text Amendments to Section 14-403

Public Comment

PC 1 Matt Power, 3-3-18
PC2 Victoria Morales with Attachment, 3-9-18
PC3 Liv Chase 3-11-18
PC4 Brent Adler 3-11-18
PC5 John McGovern 3-19-18
PC6 John McGovern 3-27-18
PC 7 Liv Chase 5-3-18
PC8 Brent Adler 5-3-18

MEMORANDUM

TO: City of Portland Planning Board
FROM: Anne M. Torregrossa, Associate Corporation Counsel
DATE: March 5, 2018
RE: Proposed changes to § 14-403

Section 14-403 has been in place for more than thirty years. Initially, it prohibited the construction of residential buildings on streets less than 35' in width. In 1984, however, the City Council added to § 14-403 to require that streets be brought up to standard before any building could be constructed. This included paving, curbing, sidewalks, and sewers. The 1984 changes were spurred by concerns about the significant costs to the City to upgrade these streets at taxpayer expense, and the danger that undersized or substandard streets posed to the provision of City services and the response of emergency vehicles. As described by the City's then-Director of Planning & Urban Development, development on unimproved streets "tends to create incessant demand for costly City-funded street improvements and also makes servicing of these areas by emergency and public safety vehicles extremely hazardous and uncertain." A copy of that memorandum is attached.

Even as recently as 2012, the City Council reaffirmed its commitment to ensuring that streets are safe before they can be built upon, and that developers bear the cost of their development. In 2012, the Zoning Board of Appeals ("ZBA") granted a hardship variance to a developer, exempting his project from the requirements of § 14-403. In response, the City Council amended § 14-473, which governs the ZBA's authority over variances, to eliminate that possibility. In a memo to the Planning Board addressing the reasons for eliminating this loophole, then-Corporation Counsel wrote that, "the decision sets the stage for variances that could defeat the purpose of Section 14-403 by leading to long paper streets with a number of homes or buildings being served by substandard streets and put the City in a difficult situation." That memo is also attached.

The City Manager and staff recognized that the requirements in § 14-403 limited development even on City-accepted streets, and also that the section was complicated, difficult to apply, and duplicated many of the rules and requirements that are now part of the site plan review process. In an attempt to streamline and clarify the requirements of that section, staff from the Planning Department, Fire Department, Department of Public Works, Permitting and Inspections Department, and Corporation Counsel collaborated on the attached proposed revision. The revision accomplishes the following:

1. Reduces the minimum width for permanently paved and accepted City streets from 35' to 25' for one- and two-family dwellings, and to 28' for other buildings. These widths may be further reduced with the determination of DPW and the Fire Department that ability of the City to provide services will not be impaired. This change makes the minimum required widths consistent with those provided for elsewhere in the Code and also provides flexibility where

2. Requires that all streets that are not accepted and paved, be upgraded and dedicated to the City. This is consistent with the previous version of § 14-403 but does remove many of the details from the ordinance, as they are all captured elsewhere, including the site plan review requirements and the technical standards. DPW has the ability under the technical standards to waive certain requirements, as appropriate.

3. Removes certain exceptions, including for Dingley Court, Morgan Court, and single-family dwellings that have been owned since November 19, 1984. These exceptions have been removed because they defeat the intent of the section to protect individuals who might want to build under those circumstances. Additionally, Dingley Court and Morgan Court appear to have been fully built, and there are few undeveloped lots remaining that have been in one ownership since 1984. Additionally, that provision had been abused by certain developers who simply "flipped" the house, rather than living there, as contemplated by the ordinance.

4. Retains the exceptions for island streets.

CITY OF PORTLAND, MAINE
MEMORANDUM

DATE: 9/17/84

TO: Stephen T. Honey, City Manager

FROM: Joseph E. Gray, Jr., Director of Planning & Urban Development

SUBJECT: Development on Unaccepted/Unimproved Streets

Please place the following item on the September 24th City Council Agenda:

Amendment to Portland City Code Chapter 14 (Land ~~UR~~ USE), Article III (Zoning) Section 14-403 (Street Access) Re: Required Street Improvements.

Statement of Fact

Planning and Public Works officials have been concerned for some time about the accelerating pace of development on unimproved streets and in legally grandfathered subdivisions. Such developments tends to create incessent demand for costly City-funded street improvements and also makes servicing of these areas by emergency and public safety vehicles extremely hazardous and uncertain.

In a related development, the Corporation Counsel recently determined that accepted streets which were abandoned between 1946 and 1976, and unaccepted streets which were dedicated before 1946, do not meet the Zoning Ordinance's requirements that buildable lots have frontage on an accepted or dedicated street. A copy of Mr. Lourie's opinion is attached for your reference.

Against this backdrop, a task force consisting of Planning, Public Works and Corporation Counsel staff has recommended enactment of the attached amendment dealing with development on unimproved streets. A summary of the amendment follows:

Legal Status of Streets

The first part of the amendment deals with the issue of "lapsed" and "abandoned" streets. The amendments would expressly reincorporate "lapsed" and "abandoned" streets into the category of buildable streets, provided that the property owner first gives to the City (1) a release and indemnification from and against all claims for damages in the event the City should decide to take the street by eminent domain, and (2) a release deed to any property rights he may have in the street.

Required Street Improvements

The remainder of the amendment deals with the issue of unimproved streets. The amendment would require that certain improvements be made in the following two instances as a condition precedent to development:

Improved but unpaved streets: For lots abutting an improved (i.e., in common and ordinary use) but unpaved portion of street, that portion which abuts the lot must be improved to public work's minimum roadway specifications (sidewalks and curbs not included).

Unimproved streets: For lots abutting an unimproved (i.e., not in common and ordinary use) portion of street, that portion which abuts the lot, and any portion between that portion and the nearest improved portion which is the principal access to the lot, must be improved to public work's minimum roadway specifications (sidewalks and curbs not included).

These Amendments were approved by the City Council Housing Committee at their meeting on September 12, 1984 by a vote of 3-0. The items are being sponsored by Councilor Abromson, Chairman of the Housing Committee.

Attachment 2

CITY OF PORTLAND

MEMORANDUM

TO: Mayor and Council

FROM: Gary Wood

DATE: August 21, 2012

RE: **Amendment to Portland City Code Chapter 14, Section 14-473 (Variances)**

This amendment contains two components. The first component amends Section 14-473 so that the limitation on the Board of Appeals authority to grant variances references the specific limitations already articulated in subparagraph (c)(4), as well as referencing subparagraph (c)(3). The omission of a reference to (c)(4) may have been an oversight. The reference to Paragraph (c)(3) in the current ordinance should be retained because there are some subsections contained within (c)(3) that make it clear that practical difficulty variances cannot be used in certain circumstances in the City's Shoreland Zone.

The second component of the amendment prohibits the Board of Appeals from granting variances from the standards set forth Section 14-403 by adding that section to subparagraph (c)(4).

"Paper" streets are rights of way designated on approved subdivision plans but never built to city standards or accepted by the City as city streets. The City has over 407 paper streets at this time that are shown on subdivisions recorded prior to September 29, 1987. Under state law the City has until September 29, 2017 to decide whether to continue the City's right to accept one or more of these streets or vacate the potential public rights in them. Current law also allows the Council to extend the deadline another 20 years.

Section 14-403 was created many years ago (see attached memo) to prevent individuals who own lots on paper streets from developing substandard access ways or driveway along the right-of-way beneath the paper street such that the City would end up with a number of residential units accessible only by driveways or private roads down which public safety vehicles might not safely pass and that the City might ultimately be asked to eventually take over and improve to City standards.

The section avoids that result by imposing a requirement on property owners who wish to build residential units along a paper street to build the road to city standards for the entire length of the individual's property abutting the paper street.

The requirement that the road be built along the entire length of the abutting property prevents a property owner from stopping the construction of a road built to city standards at that

point along his property where he has established enough road frontage to meet city road frontage requirements thus leaving a potential gap for the next abutting property owner should that person subsequently wish to also build a residential unit on their lot.

Although the City's Board of Appeals has for the most part refused to grant variances from Section 14-403 nothing in the current ordinance prevents them from doing that and on June 21, 2012 the Board did grant a variance from Section 14-403 requirements.

In granting that variance, the Board acted within its current authority in the ordinance and also in a situation in which a large number of residential units could not be built along the roadway because of its short length. However, this decision sets the stage for variances that could defeat the purpose of Section 14-403 by leading to long paper streets with a number of homes or buildings being served by substandard streets and put the City in a difficult situation.

In order to prevent developers or other property owners from taking advantage of the current authority in the ordinance to grant variances from Section 14-403 the proposed amendment has a retroactive date to the date upon which the Board of Appeals issued its decision. No additional applications have been filed since that decision seeking a variance from the Section 14-403 requirements although, there is one pending application that may be amended to do so.

Because the proposed amendment is to Chapter 14, it should be referred to the Planning Board for a recommendation back to the Council before the Council can act on it.

Sec. 14-403. Street access.

A building or structure may only be constructed or moved on a lot, or a dwelling unit added to a lot, where one of the following is met.

(a) *Permanently paved and accepted streets or island streets*. The lot has the minimum required frontage on either (i) a permanently paved and accepted City street that meets the minimum clear paved width, measured from the edge of the pavement, excluding sidewalks, or (ii) on an existing street on an island in Casco Bay that meets the minimum clear built width, measured from the edges of the built street. The minimum clear width shall be as follows:

1. For one- or two-family dwellings – 25';

2. For all other buildings – 28'.

These widths may be reduced with the written approval of the Fire Chief, and the Public Works Director where, in their shared and final determination, the ability to provide City services will not be unreasonably impaired.

(b) *Streets to be upgraded in connection with development*. The owner or developer of the lot will do all of the following in connection with the development of that lot:

1. Upgrade the street, between the lot and the nearest permanently paved and accepted City street, to meet the standards adopted elsewhere in this Code, including those adopted by the public works authority and the planning authority pursuant to this Code;

2. Take all necessary steps under Chapter 25, Article III, of this Code to dedicate the upgraded portion of the street to the City for acceptance, including a waiver of any claim for damages resulting from the acceptance; and

3. Obtain site plan approval for the work required under this subsection.

(c) *Other exceptions.* The building or structure is one of the following:

1. An accessory building; or

2. Part of a Planned Residential Unit Development.

PC1

Portland Maine Yes. Google's good here.

Jennifer Munson <jmy@portlandmaine.gov>

Fwd: Public Comments for March 13th Planning Meeting

Barbara Barhydt <bab@portlandmaine.gov> Sun, Mar 4, 2018 at 8:11 AM
To: "Munson, Jennifer" <jmy@portlandmaine.gov>

Public comment for 14-403.

Barbara Barhydt
Development Review Services Manager
Planning Division
389 Congress Street 4th Floor
Portland, ME 04101
(207) 874-8699
Fax: (207) 756-8256
bab@portlandmaine.gov

---------- Forwarded message ----------
From: **Matt Power** <power.matt@yahoo.com>
Date: Sat, Mar 3, 2018 at 9:40 AM
Subject: Public Comments for March 13th Planning Meeting
To: "bab@portlandmaine.gov" <bab@portlandmaine.gov>, Kim Cook <kcook@portlandmaine.gov>

3-2-2018

Hello Barbara,

I've been corresponding with Kim Cook over the last week about the Portland ordinance that the planning board is taking up for comment on March 13th, section 14-403. I'm submitting my comments in writing below, because I am away on business on the 13th, and can't be there in person. Kim has been very kind to assist me and follow up on this matter.

Here are my public comments.

An Argument for Preventing "Ghost Lots" with 14-403

My partner and I own a parcell on Tarball Ave in the Riverton neighborhood, one of many so called paper streets in Portland. It's .6 acre lot on an unpaved road. Tarbell Ave has several homes on it, including one that is past us, on the end of the street, and another, at 119 Tarbell, that was built after the restrictive language in 14-403 was adopted in 1987 ***(see attached document)***. Many outbuildings have also been added after the ordinance. The street is plowed by the city, trash and recycling are picked up, street lights are serviced, electric, sewer and water are already at the street. To my understanding, on a paper street, none of these are supposed to be provided by the city (per the notes sent to the 119 Tarbell property). This rule is apparently not followed, and I'm glad—as are the many residents of Tarbell Ave.

We would like to be able to build a small home and garden-related outbuildings on our property, but we have been blocked by 14-403, because as it's written, we would have to widen, pave and add curbs to the entire dirt street, a huge expense we could not afford. This restrictive ordinance as its written makes no sense for streets like ours. A new home on the street would add little or no infrastructure burden, and bring in new taxes.

Under 14-403, public works can waive the curb requirement, but not the other street upgrades. This means the only recourse for property owners on paper roads wanting to build a home or even an outbuilding is to appeal the interpretation of the ordinance, with slim chance of success.

As you know, last year, Maine ordered municipalities to declare paper streets as city streets or revert them to abutting owners, but left a loophole that Portland took, buying them 20 more years of procrastination on paper streets. I understand why the city did it...paving all those streets would cost a fortune. But at the same time, the combination of this choice, and strict interpretation of 14-403, have effectively "locked out" properties like ours, which are ideally situated for small scale new construction.

As written, 14-403 is outdated. I assume the initial intent was to push the cost of street upgrades onto large scale developers, but unfortunately it has caught small landowners in its net, at a time when Portland needs new ways of adding housing. The ordinance needs to be relaxed to allow for common sense development. A street that is already serviced and occupied should not have "ghost lots" created by a heavy-handed ordinance.

Possible Solutions

1. **Make street exceptions easier.** There is currently one mechanism for building on a paper street. The street can be *declared an exception*. A few streets are on this short list, but my understanding is that adding a street requires a full council vote. Why not add some codified, basic criteria that supports an exception? If the street is occupied and serviced by the city already, for example, the exception process should be easier. Perhaps a simple appeal can redefine the street as a "De Facto City Street.: In other words, it's a city street in all but name, not subject to the same high level of upgrades, but much more flexible for landowners looking to build homes or outbuildings.

> I *Exceptions.* The requirements of this section shall not apply to the following city streets upon their construction by the public works authority to such standards as are determined by the authority to be the most feasible:
>
> 1. Dingley Court;
>
> 2. Morgan Court.
>
> (Code 1968, § 602.18.B; Ord. No. 193-84, § 1, 11-19-84; Ord. No. 178-87, 11-2-87; Ord. No. 372-89, 3-20-89; Ord. No. 273-90, 3-19-90)

2. **Allow for individual parcel appeals.** Add language that allows for smaller residential projects to appeal the restrictive road requirements for paper streets. An appeal would not challenge the interpretation of this ordinance. It would challenge the application of the ordinance to specific lots on a street, based on the level of additional infrastructure costs.

3. **Give public works more waivership options.** At present, they can only waive the curb requirement. Give them the ability to waive road widening, storm drains, sidewalks, paving and other requirements if they don't see them as essential to current maintenance of a paper street. –excerpt from 14-403 below:

> (b) *Minimum requirements for street improvements on unimproved and improved but unpaved streets.* For a lot abutting any portion of a street which is unimproved or improved but not permanently paved, that portion which abuts the lot, and any like portion between such portion and the nearest permanently paved street or portion which is the principal access to such lot, shall be improved, including sewers, storm drains, pavements, curbs and, if located on a designated school walking route, sidewalks, in accordance with the minimum technical standards promulgated by the public works authority pursuant to section 14-498(a) of article IV of this chapter. Where the nearest permanently paved street does not have granite curbing, the public works authority may waive the

4. **Add off-grid and tiny house options.** Landowners who are willing to build a home that is low impact, supplies its own water, electricity and so on should be held to a less stringent infrastructure standard. Tiny homes are included in the Maine state building code now. They are also talked about on the now outdated City faq page about tiny homes:

"The city is actively looking at the issue of tiny houses and what role they might play in helping address our housing needs. The biggest challenge appears to be the state building code, which the city is required to utilize."

That challenge is **no longer an issue**. It's a good time to add some language opening the door to eco-friendly housing options that would allow Portland to live up to its goals of being a "green" place to live

Please consider these suggestions as you modify 14-403. Building in the city limits is the most sustainable kind of new development. Without changes to 14-403, the options for adding new housing stock over the next 20 years will be extremely limited, and the residents will be poorly served.

Thank you,

Matt Power

Portland

207-619-2713

Records for 119 Tarbell Ave-websized.pdf
4838K

PC2

Portland Maine Yes. Google's good here.

Barbara Barhydt <bab@portlandmaine.gov>

March 13th PB workshop RE: proposed changes to 14-403

1 message

Victoria Morales <victoria@moraleslaw.me> Fri, Mar 9, 2018 at 2:29 PM
To: Barbara Barhydt <bab@portlandmaine.gov>, "sgo@portlandmaine.gov" <sgo@portlandmaine.gov>

Dear Planning Board Members and Planning Staff,

Please accept this email and attachment with additional suggestions to the proposed amendments to section 14-403 of the land use code.

I represent MTR, LLC, a small residential construction company interested in building homes that are between 1,400 and 1,600 square feet and are affordable for working middle class families. To further that goal, my client is looking at lots in Portland near schools and green space, and with frontage on streets acceptable to the City. Many undeveloped lots in the City are on gravel roads that have been dedicated for public travel many years ago through the recording of a subdivision plan (paper streets). The barrier to creating housing on many of these lots is the cost of building the road, including the subsurface infrastructure, drainage, and lighting that is currently required. Larger scale developers can often absorb these costs and role them into the return on the higher end product. That is not the same for smaller developers.

My goal in submitting these suggestions is to request that the Planning Board take a good look at the street and infrastructure standards in Chapter 25 and the Technical Manual, which present significant barriers to building residential housing in the City, particularly for building one single family home on a gravel road that already has other residential homes on it. Admittedly, the amendments I offer do not go far enough to unlock the potential for creating more housing on the many undeveloped lots in the City. However, my hope is that the Planning Board, staff, and DPW can gather and examine the data regarding the existing list of unaccepted roads, unpaved roads, and available lots to remove the barriers that exist today to meeting the goals of the Comprehensive Plan to create more much needed housing in the City.

Very truly yours,

Victoria

Victoria Morales, Esq.
Morales Law
Land Use and Government Relations Counsel
188 State Street, Suite 3, Portland Maine 04101
207.216.0643
https://www.linkedin.com/in/victoria-morales-a69b7550

CONFIDENTIALITY NOTICE: This email correspondence, including documents, files, or previous messages attached to it, is intended only for use by the individual or entity named above. If you are not the intended recipient of this email, you are hereby notified that any dissemination, distribution, or copying of this email and any attachments thereto is strictly

prohibited. If you have received this correspondence in error, please immediately notify me by replying to this message and permanently delete the original, all copies, and all printouts of this message. Thank you.

Edits to proposed changes 14-403 v.11(1).docx
20K

Further suggested changes to the proposed amendments to 14-403 in red.

Sec. 14-403. Street access.

A building or structure may only be constructed or moved on a lot, or a dwelling unit added to a lot, where one of the following is met.

(a) *Permanently paved and accepted streets or island streets.* The lot has the minimum required frontage on either (i) a permanently paved and accepted City street that meets the minimum clear paved width, measured from the edge of the pavement, excluding sidewalks, or (ii) on an existing street on an island in Casco Bay that meets the minimum clear built width, measured from the edges of the built street. The minimum clear width shall be as follows:

1. For one- or two-family dwellings – 25';

2. For all other buildings – 28'.

These widths may be reduced with the written approval of the Fire Chief, and the Public Works Director where, in their shared and final determination, the ability to provide City services will not be unreasonably impaired.

(b) *Streets to be upgraded in connection with development.* The owner or developer of the lot will do all of the following in connection with the development of that lot:

1. Upgrade the street between the lot and the nearest permanently paved and accepted City street by paving the existing travel way or the minimum clear width measurement as described above, as determined by the Public Works Authority, and meeting the standards adopted elsewhere in this Code, including those adopted by the public works authority and the planning authority pursuant to this Code;

    i. The widths may be reduced with the written approval of the Fire Chief, and the Public Works Director where, in their shared and final determination, the ability to provide City services will not be unreasonably impaired.

2. Take all necessary steps under Chapter 25, Article III, Section 47 of this Code to dedicate the upgraded portion of the street to the City for acceptance, including a waiver of any claim for damages resulting from the acceptance; and

3. Obtain site plan approval for the work required under this subsection.

(c) *Other exceptions.* The building or structure is one of the following:

1. An accessory building; or

2. Part of a Planned Residential Unit Development.

Street Acceptance – Portland Code, Chapter 25

Victoria's suggested changes in red

Sec. 25-47.

Acceptance of streets and ways dedicated for public travel prior to July 7, 1948. A street or way dedicated for public travel prior to July 7, 1948, including paper streets, shall be laid out and accepted as a public street or way by the city only upon the following conditions:

(a) Minimum width. Such street or way shall have a minimum width of fifty (50) feet unless the owners of property adjoining the street or way shall convey to the city sufficient land to lay out a fifty (50) foot street; provided, however, that the Public Works and Planning Authority may allow the minimum clear width or less, as described in 14-403 when a fifty (50) foot street is impracticable.

Provided further that any such street or way located on any of the islands in Casco Bay, which is not considered to be a collector street in the opinion of the public works authority and the planning board, may have a minimum width of thirty-two (32) (change to: the minimum clear width standard in 14-403) feet.

(b) Recorded plan. A plan of the street or way shall have been recorded in the county registry of deeds prior to July 7, 1948.

(c) Petition by abutters. A majority of the abutters upon the street or way shall in writing, on a form to be prescribed by the public works authority, petition the city council to improve the street by grading, curbing, gravelling, macadamizing, paving, or in any other way making a permanent street of the same, or any part thereof; and in said petition shall waive any damages resulting from the laying out and acceptance of said street or way, or any necessary changes in the grade thereof; and shall agree to pay their just proportion of one-third of the cost thereof. For purposes of this article, a majority of the abutters shall mean those abutters who own more than fifty (50) percent of the frontage, both in front-feet and in assessed value.

(d) Assessment of costs. When the street or way shall have been laid out and accepted as a public street or way, and such improvements have been made, one-third of the cost thereof shall be assessed on the property adjacent to and bounded on the street or way in the manner, and with the same right of appeal, provided in 23 M.R.S.A §§ 3601--3605.[1] (Code 1968, § 707.2) Cross reference(s)--Uniform procedure for collecting assessments,

---

[1] 23 M.R.S. §3601. Apportionment of damages or benefits

Whenever the city government lays out any new street or public way, or widens or otherwise alters or discontinues any street or way in a city, and decides that any persons or corporations are entitled to damage therefor, and estimates the amount thereof to each in the manner provided by law, it may apportion the damages so estimated and allowed, or such part thereof as to it seems just, upon the lots adjacent to and bounded on such street or way,

other than those for which damages are allowed, in such proportions as in its opinion such lots are benefited or made more valuable by such laying out or widening, alteration or discontinuance, not exceeding in case of any lot the amount of such benefit, but the whole assessment shall not exceed the damages so allowed. Before such assessment is made, notice shall be given to all persons interested of a hearing before said city government, at a time and place specified, which notice shall be published in some newspaper in said city at least one week before said hearing.

Google Groups

Planning Board Workshop- 3/13- Text amendment 14-403

Liv Chase <livchase@yahoo.com> Mar 11, 2018 3:39 PM

Posted in group: **Planning Board**

Dear Planning Board Members and Planning Staff,
Thank you for your time and attention in addressing section 14-403 of the City's land use code. This amendment directly effects me because I own 2 properties on accepted city streets that have a width less than 25'. Based on the history of 14-403 and the enforcement of this ordinance, the intention of this code is to address unaccepted city streets, i.e. paper streets. It is my understanding, no permit application or plan for development on an accepted city street was ever denied on the basis of street width, until recently.
The attached comments, attachments, and suggested amendment to 14-403 are to address 14-403 (a) for accepted city streets. Regardless of the prior interpretation, I hope you will agree that accepted city streets which already have city services and established widths, should not be part of this ordinance.
Regards,
Liv Chase
livchase@yahoo.com
207-522-4345

Section 14-403 was written and adopted in 1968. The interpretation of this code has always been that it applies to non-accepted city streets i.e. paper streets. This section of the land use code has had no bearing on accepted city streets in the past. The City of Portland zoning department has approved many projects on the Portland peninsula on streets which are less than 35' in width (Attachment D). Only recently has section 14-403 been read literally and enforced to deny permit applications on accepted city streets that are less than 35' in width. One of these permit applications is an application submitted in May 2017 to build a small 499sf single family house located at 47 Chapel Street. If the true intention of clarifying this code is related to the impact it will have on city services, please consider the following:

Why are we defining street access?
We are defining street access because it is relevant to fire and life safety.

Why would street width need to be defined for accepted city streets that are already built?
City Services
Accepted city streets already have city services, i.e. water/ sewer, plowing, general upkeep, ect. As property owned by the city, the city already holds the responsibility/cost for maintaining these streets.
Adding additional buildings to a street with city services does not unreasonably impair these services because these services are already in place.
Fire and Life Safety
Accepted city streets are wide enough to allow for the access of fire trucks and ambulances in the event of an emergency. Currently, all accepted city streets are wide enough for a fire truck to drive down (a fire truck is just under 10' in width). A brief conversation with the fire department revealed that the narrowest street for the fire truck is Oak Street. Even though the street width is 24.5 feet wide, cars are allowed to park on both sides of the street. This equals a clear width of 10.5 for the fire truck. Clear width for a fire truck to pass should take into account parked cars on the street (Attachment C)

City staff has expressed the need to simplify and clarify section 14-403. The clarification is that 14-403 is not intended for accepted city streets.

Other Points to Consider:

Accepted city streets on the peninsula have been streets since the 1800's. The peninsula is home to the highest density of building infrastructure in Portland. If there truly was a problem in regards to city services and life safety on accepted city streets, this would have been addressed 30 years ago when the code was revised.

This proposed text amendment will take away property owners rights. There are 53 streets on the peninsula that would be affected by this amendment (Attachment A and B)

It is understood that there is a need to regulate the creation of new city streets (Section 14-403 (b)) and adopt standards for these streets. NFPA 1 fire code determines a minimum clear width of 20 feet for a emergency access in the creation of new streets.

The proposed text amendment establishes an arbitrary street width that is not based on anything pertaining to fire and life safety. Additionally, it allows for this width to be reduced by approval of the fire chief and public works director. This makes the proposed text discretionary and vague. This opinion based flexibility would prove to be beneficial in connection with the development of new streets, but it adds no value to streets which are already defined as to width. Accepted city streets are already developed and most times, they can not be widened because existing infrastructure is built to the right of way.

The proposed text amendment adds more restrictions to 14-403

Current	**Proposed**
Streets with ROW less than 35'*	Streets less than 25' not including sidewalk*
Only for residential dwellings	All building regardless of use
Exception for frontage on another street	No exception
Only for new construction	Not specified (adding a unit could be within existing infrastructure)

*See Attachment E

14-403 is in direct conflict with the City's comprehensive plan. Vacant lots, that meet the minimum required lot size, have the potential to add more dwelling units and create higher densities. Further restriction of these vacant lots is not in line with the comprehensive plan.

Sec. 14-403. Street access.

A building or structure, intended for use as habitation, may only be constructed or moved on a lot, ~~or a dwelling unit added to a lot,~~ where one of the following is met.

(a) ~~*Permanently paved and accepted streets or island streets.* The lot has the minimum required frontage on either (i) a permanently paved and accepted City street that meets the minimum clear paved width, measured from the edge of the pavement, excluding sidewalks, or (ii) on an existing street on an island in Casco Bay that meets the minimum clear built width, measured from the edges of the built street. The minimum clear width shall be as follows:~~

~~1. For one- or two-family dwellings – 25';~~

~~2. For all other buildings – 28'.~~

~~These widths may be reduced with the written approval of the Fire Chief, and the Public Works Director where, in their shared and final determination, the ability to provide City services will not be unreasonably impaired.~~

(a) Accepted city streets appearing on the official map of the city are exempt from this section of the land use code.

(b) Unaccepted city *streets to be upgraded in connection with development.* The owner or developer of the lot will do all of the following in connection with the development of that lot:

1. Upgrade the street between the lot and the nearest permanently paved and accepted City street by paving the existing travel way or the minimum clear width measurement as described above, as determined by the Public Works Authority, and meeting the standards adopted elsewhere in this Code, including those adopted by the public works authority and the planning authority pursuant to this Code;

   i. The widths may be reduced with the written approval of the Fire Chief, and the Public Works Director where, in their shared and final determination, the ability to provide City services will not be unreasonably impaired.

2. Take all necessary steps under Chapter 25, Article III, of this Code to dedicate the upgraded portion of the street to the City for acceptance, including a waiver of any claim for damages resulting from the acceptance; and

3. Obtain site plan approval for the work required under this subsection.
   Exception: The above guidelines may be

(c) *Other exceptions.* The building or structure is one of the following:

1. An accessory building; or

2. Part of a Planned Residential Unit Development.

street widths as measured from curb to curb

street name	street width (feet)		street name	street width (feet)
guilford court	10.3		bramhall place	21
horton place	11.7		myrtle street	21
chapel street	12.4		market street	21.1
russel street	12.5		summer street	21.4
joy place	13		alder street	22
tate street	13.8		forest street	22.3
throwbridge place	13.8		south street	23.1
fletcher street	14.7		winthrop street	23.1
maple street	15.3		may street	22.4
montgomery street	15.5		stetson court	22.5
marshall street	16		dow street	22.7
orange street	16		mountfort street	23.4
nye street	16.1		winter street	23.8
stone street	16.2		oak street	24.5
bond street	16.4		neal street	24.9
storer street	16.6		orchard street	25.5
stratton place	18.8		hampshire street	25.9
marion street	19.1		sheridan street	26.1
briggs street	19.4		howard street	26.2
romasco street	19.4		wilmot street	26.6
school street	19.6		clifford street	26.6
brown street	20.2		park street	26.8
locust street	20.8		emerson street	27.2
casco street	20.8		chestnut street	27.3
cedar street	20.9		carlton street	27.7
boynton street	20.9		gray street	27.9
			hammond street	27.9

There are 41 streets that are less than 25' in width

ATTACHMENT B

MAP OF THE PORTLAND PENNISULA

ATTACHMENT C

Fire and Life Safety-

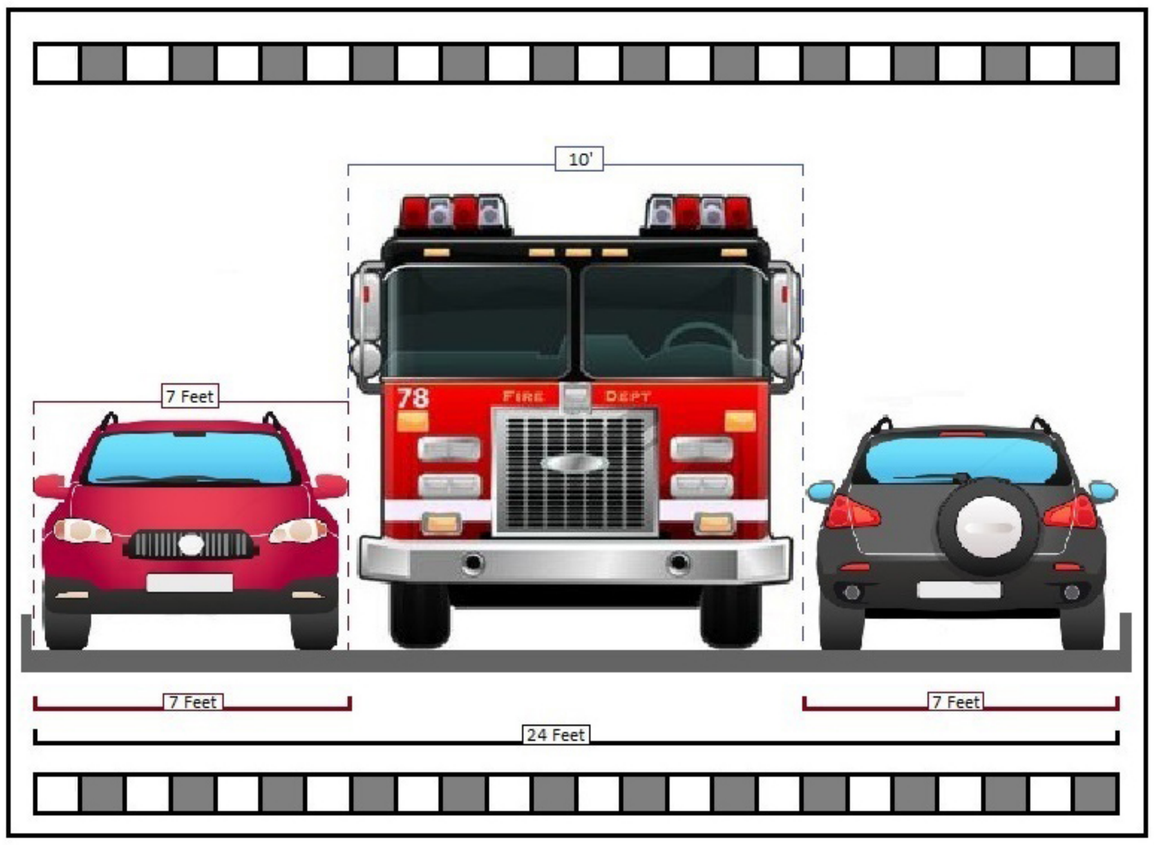

Parking on both sides of the street

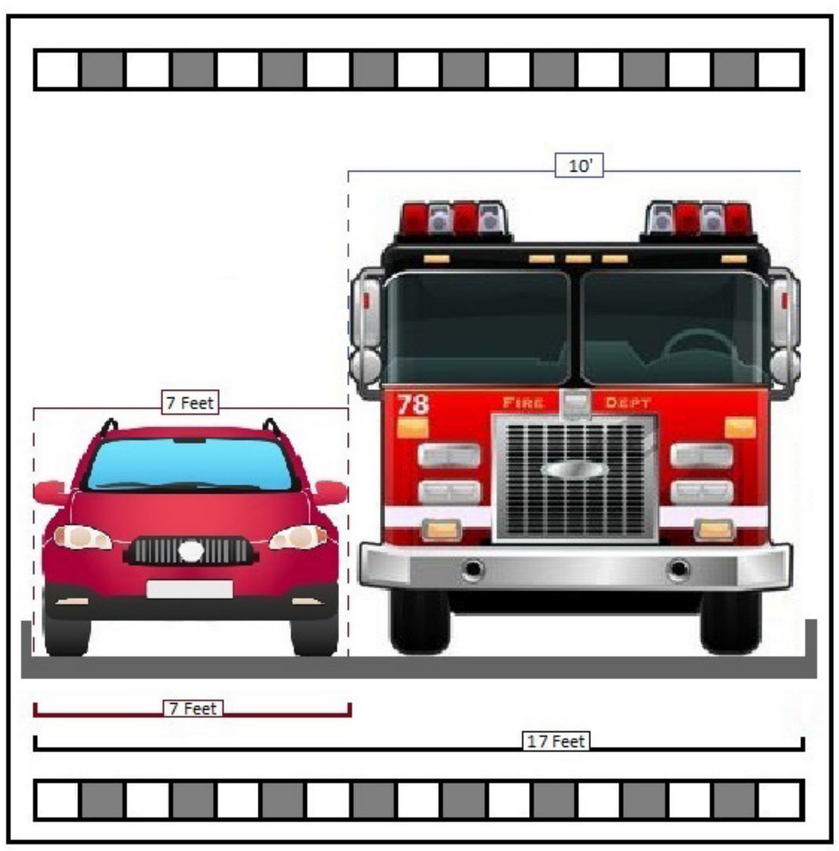

Parking on one side of the street

No parking on either side of the street

7 feet is the minimum width necessary for parallel parking space. The measurement was based on average vehicle widths and design standards for on-street (parallel) parking space in other municipalities, including the City of Chicago

ATTACHMENT D

72 Oak Street

Year Built: 2011
Use: 37 Units
Street Width: 24.5 feet

Parking on 2 sides =
clear width for fire truck 10.5 feet

50 Myrtle Street

Year Built: 2014
Use: Single Family
Street Width: 21 feet

Parking on 1 side =
clear width for fire truck 14 feet

5 Briggs Street

Year Built: 2016
Use: 3 units
Street Width: 19.4 feet

Parking on 1 side =
clear width for fire truck 12.4 feet

22 Tate Street

Year Built: 2016
Use: 8 Condominiums
Street Width: 13.8 feet

No on street parking =
clear width for fire truck 13.8 feet

1 Joy Place

Year Built: Currently being reviewed for permit application
Proposed Use: 12 Condominiums
Street Width: 13 feet
Street Condition: Dirt Path

Fire truck access = ?

ATTACHMENT E

Current 14-403: "a street width less than 35'"

Street width varies- depending on sidewalk width
For a 7' wide sidewalk, the street width = 21'

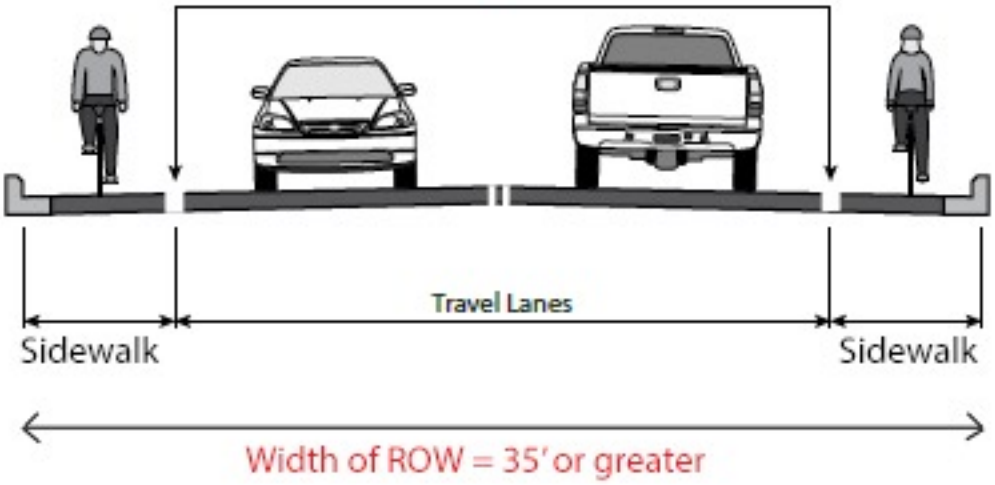

Proposed 14-403: "minimum clear width as measured from the edge of the pavement, excluding sidewalks"

Street width = 25' or greater for 1 or 2 family
Street width = 28' for all other buildings

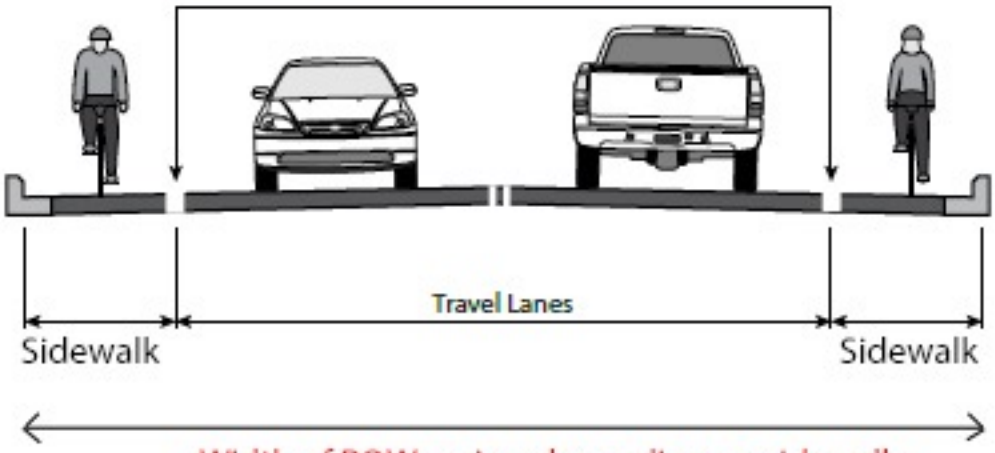

Width of ROW varies- depending on sidewalk
For a 7' wide sidewalk, the ROW must be 39' for a 1-2 family and 42' for all other buildings

To: Planning Board
3/11/2018
From: Brent Adler
47/49 Chapel Street

RE: Planning Board workshop comments text amendment 14-403

I would like to thank the hard work of Corporation Council and Planning Staff for bringing this text amendment before the planning board. I am happy to see that the proposed text amendment seeks to simplify and clarify issues with the code. Unfortunately, the language in the proposed section will prevent development on small city adopted streets and will allow for discretionary decisions by the Fire Chief and Public Works Director.

Subsection (a) will remove small scale development opportunities on functioning legally non conforming streets that currently have existing public services. 72 Oak Street and 22 Tate Street have working street widths of less than 13'. These two projects were large scale and prove to be a success (72 Oak is a 37 unit apartment building and 22 Tate is a 8 Unit condominium building), approved by the planning board with the support of Public Works and the Fire Department. I would like to provide these as examples of how peninsula streets that are narrow can still be functioning contributing streets to our city that deserve special attention, not to be treated as non buildable streets unable to provide new housing stock as the city grows and we adopt a new comprehensive plan. Public Works has the ability to service narrow streets today the same way they have been servicing their residents over the past 100 years. We have tools available in zoning to allow safe housing on narrow streets that will not negatively contribute to maintenance already provided under Public Works. As a City that has grown around these smalls streets why are we considering abandoning the potential they present for development? We can ask the following questions to help ease the challenges a narrow street presents to emergency and public works vehicles.

Square footage restrictions on the proposed development limited to 1000 sq feet
A larger set back from neighboring buildings
Limiting the height of the building to single level
The proximity of a fire hydrant to the proposed dwelling
Can a narrower street allow for higher density if the building is sprinkled according to NFPA
Parking on both sides or none
One way or two way
The smallest fire engine currently used by the City and its working width, Engine 31?
Do current structures exist on the street and have City Services

I would propose the following as an exception to subsection (a)

No Street width minimum on City approved adopted streets on the peninsula

I am in support of having 14-403 amended but I am not in support of the proposed changes. I am the owner of 47/49 Chapel Street, a lot with 3,450 square footage. A buildable lot with water, sewer, gas, and electric. On a street that is plowed during the winter and maintained by the city. This street is less than a block from the City Hall and services 6 existing houses. My application for a small 500 square foot single family is currently on hold for review with the City. My permit is awaiting denial based on the current interpretation of 14-403. If the proposed changes go through, my paved width being 12.4' excluding sidewalks, will kick my application for review and approval to the Fire Chief and Public Works Director. If I do not have approval by these two departments my lot will become non-buildable. Meaning, for me, a regulatory taking. I am unable to pursue an appeal because of 14-473 in the land use code Section (c)4h. Please consider this text amendment an opportunity to allow small development on small streets and not an exclusionary effort for property owners and developers in my position.

For your information Joseph Gray Jr. Director of Planning and urban development on 10/31/84 has already defined unimproved streets. These streets identified on the peninsula should be the only streets considered under the proposed subsection (a) for non development. Please see attached

---
-

CITY OF PORTLAND, MAINE
MEMORANDUM

TO: Stephen T. Honey, City Manager

DATE: 10/31/84

FROM: Joseph E. Gray, Jr., Dir., Planning & Urban Development

SUBJECT: Council Request for Material on Unaccepted Streets

At the recent Council workshop on unaccepted streets, Council members asked that we prepare certain additional information for distribution to the Full Council. The material includes:

1) Building Permits

Sam Hoffses, Chief of Inspection Services, has reviewed our files and has determined that since January, 1981, 47 permits have been issued for housing on unaccepted streets. The Council should note that during 1984, 22 permits or almost half those issued, were during this year. This is an indication of the acceleration of development on these streets.

2) List of Unaccepted Streets/Neighborhood Breakdown

The Parks and Public Works Department has prepared a breakdown of unaccepted streets by neighborhoods. This list is enclosed.

3) Charts Used in Staff Presentation

At the request of the Council we have reduced to typing the charts used in staff presentation on unaccepted streets. There are four charts.

A) Issues Chart
B) Streets Glossary
C) Lapsed/Abondoned Streets
D) Unimproved Streets

"STREETS" GLOSSARY

DEDICATED:	Offered to City as public street
ACCEPTED:	Accepted by City as public street
LAPSED:	Dedicated but not accepted within reasonable time (40+ years)
ABANDONED:	Accepted but not maintained for 30 years (1946 - 1976)
IMPROVED:	In actual existence (paved or unpaved)
UNIMPROVED:	Not in actual existence ("paper")

Garden Lane	U
Park Street Court	U
Stratton Street	U
Tolman Place	U
Guilford Court	U
Hall Court	U
High Street Court	U
Nye Street	U

WEST END

Gilman Place	
Houlton Street	U
Spring Street Place	U
Trowbridge Place	U
West Street Court	U
	U

EAST END

Gilbert Lane	U
East Cove Street	U
Poplar Street	U
Sumner Court	U

PC5

Portland Maine | Yes. Google's good here.

Jennifer Munson <jmy@portlandmaine.gov>

Fwd: Section 14-403

Barbara Barhydt <bab@portlandmaine.gov> Mon, Mar 19, 2018 at 8:03 AM
To: "Munson, Jennifer" <jmy@portlandmaine.gov>

Public comment

Barbara Barhydt
Development Review Services Manager
Planning Division
389 Congress Street 4th Floor
Portland, ME 04101
(207) 874-8699
Fax: (207) 756-8256
bab@portlandmaine.gov

---------- Forwarded message ----------
From: **john mcgovern** <jtmcgovern1@gmail.com>
Date: Sat, Mar 17, 2018 at 9:30 PM
Subject: Section 14-403
To: bab@portlandmaine.gov

Hello Barbara.

My wife just brought to my attention that the city had a planned meeting on the thirteenth of March regarding changes to the city code section 14-403 on paper streets in the city of Portland. I am pleased to know that the meeting had been postponed do to inclement weather , as I would have missed it. As you know I have been working with the city on making the improvements to Hingham street , I am hoping the timing of this meeting will only have a positive effect on what I have been trying to accomplish on Hingham street. As you know we had a meeting at city hall with your self John Jennings David Brenerman myself and others. I had requested the meeting because of a paragraph in the city code that allows a resident of the city of Portland with a lot of record and being part of a subdivision recorded in the registry deeds , the allows them to petition the city to bare part of the cost of bringing the road up to the standards of the city of Portland. Although the meeting did not resolve the issue of who should bare the expense of these roads I moved forward on my own to make the improvements at my expense. At this point I have invested over nine thousand dollars of my own money in engineering cost and application fees and I am still waiting for the review process to be complete. In closing I would like to say that the city has a enormous untapped revenue of property tax resources by not working with city residents to improve these streets. If the city of Portland wants to be know as progressive pioneer in moving into the twenty first century it is time to be more aggressive in allowing the development of this untapped revenue stream. I do not think it is unreasonable for the city to take on some of the cost burden of these projects. I am strongly against any changes to 14-403 that would have a negative impact on future development of these valuable pieces of property.

Respectfully ,

John McGovern

Sent from my iPad

Portland Maine Yes. Google's good here.

Jennifer Munson <jmy@portlandmaine.gov>

Fwd: Section 14-403

Barbara Barhydt <bab@portlandmaine.gov> Tue, Mar 27, 2018 at 7:57 PM
To: "Munson, Jennifer" <jmy@portlandmaine.gov>

public comment for 14-403.
Barbara Barhydt
Development Review Services Manager
Planning Division
389 Congress Street 4th Floor
Portland, ME 04101
(207) 874-8699
Fax: (207) 756-8256
bab@portlandmaine.gov

---------- Forwarded message ----------
From: **john mcgovern** <jtmcgovern1@gmail.com>
Date: Tue, Mar 27, 2018 at 7:47 PM
Subject: Re: Section 14-403
To: Barbara Barhydt <bab@portlandmaine.gov>

Hello Barbara.

After careful thought for the amendment allowing street minimum width to be narrowed to 25' for certain streets I have to oppose . It is my understanding from the public works department that the minimum finished street width is twenty eight feet no exceptions.
Allowing for some streets to be twenty five feet wide and yet forcing others to be twenty eight feet wide would put undo hardship on those that bear the extra expense.
Any change to the code in 14-403 should apply to all streets within the city regardless of there status. We need to set a minimum guideline and enforce the code as set forth.

Respectfully .

John McGovern

Thank you.

Sent from my iPad

On Mar 19, 2018, at 11:20 AM, john mcgovern <jtmcgovern1@gmail.com> wrote:

> Thank you, Barbara.
>
> John
>
> Sent from my iPhone
>
> On Mar 19, 2018, at 8:07 AM, Barbara Barhydt <bab@portlandmaine.gov> wrote:
>
> > Hello Mr. McGovern:
> >
> > I am including you e-mail as public comment for the Board. Here is the link to the City's website where the memo for the Board is located. http://www.portlandmaine.gov/AgendaCenter/ViewFile/Agenda/_03222018-2356?html=true

This is a workshop agenda item and that meeting starts at 4:30. This is the second agenda item, but we may need to move this forward to be the first item.

Thank you for your comments.

Barbara

Barbara Barhydt
Development Review Services Manager
Planning Division
389 Congress Street 4th Floor
Portland, ME 04101
(207) 874-8699
Fax: (207) 756-8256
bab@portlandmaine.gov

On Sat, Mar 17, 2018 at 9:30 PM, john mcgovern <jtmcgovern1@gmail.com> wrote:

> Hello Barbara.
>
> My wife just brought to my attention that the city had a planned meeting on the thirteenth of March regarding changes to the city code section 14-403 on paper streets in the city of Portland. I am pleased to know that the meeting had been postponed do to inclement weather , as I would have missed it. As you know I have been working with the city on making the improvements to Hingham street , I am hoping the timing of this meeting will only have a positive effect on what I have been trying to accomplish on Hingham street. As you know we had a meeting at city hall with your self John Jennings David Brenerman myself and others. I had requested the meeting because of a paragraph in the city code that allows a resident of the city of Portland with a lot of record and being part of a subdivision recorded in the registry deeds , the allows them to petition the city to bare part of the cost of bringing the road up to the standards of the city of Portland. Although the meeting did not resolve the issue of who should bare the expense of these roads I moved forward on my own to make the improvements at my expense. At this point I have invested over nine thousand dollars of my own money in engineering cost and application fees and I am still waiting for the review process to be complete. In closing I would like to say that the city has a enormous untapped revenue of property tax resources by not working with city residents to improve these streets. If the city of Portland wants to be know as progressive pioneer in moving into the twenty first century it is time to be more aggressive in allowing the development of this untapped revenue stream. I do not think it is unreasonable for the city to take on some of the cost burden of these projects. I am strongly against any changes to 14-403 that would have a negative impact on future development of these valuable pieces of property.
>
> Respectfully ,
>
> John McGovern
>
> Sent from my iPad

Notice: Under Maine law, documents - including e-mails - in the possession of public officials or city employees about government business may be classified as public records. There are very few exceptions. As a result, please be advised that what is written in an e-mail could be released to the public and/or the media if requested.

PC7

Google Groups

Planning Board Meeting- 5/8- Text amendment 14-403

Liv Chase <livchase@yahoo.com> May 3, 2018 5:32 PM

Posted in group: **Planning Board**

Dear Planning Board Members and Planning Staff,
Please see the attached comments for the Planning Board Meeting for May 8th, 2018 in regards to the text amendment for 14-403.
Regards,
Liv Chase
livchase@yahoo.com
207-522-4345

Dear Planning Staff,

I attended the Planning Board Workshop on March 22, 2018. At the workshop there was much discussion over the street width. The current re-write of 14-403 determines a street width as measured from curb to curb. This street width is not clearly defined to reflect a clear width. The clear width is the only factor when determining if a fire truck or ambulance can pass.

Interim Fire Chief Keith Gautreau spoke at the Planning Board Workshop and in his professional opinion, he determined that a width of 25' from curb to curb was wide enough regardless of parked cars on either side.

Parked cars can range in width, with the largest parked car 8.5 feet wide. Most vehicles are approximately 7 feet in width and this is the number that is most commonly used. A standard fire truck is just under 10' wide.

1) If fire and life safety are the reasons behind the clarification of 14-403, doesn't it make sense to clearly define the clear width in relationship to parked cars on the street? (the proposed added text does this- see attachment A and B)
2) Can planning staff and/or Mr. Gautreau explain how a street with width of 25' curb to curb that has parking on both sides, is more safe than a street that has a width of 11' with no parking on either side?

Thank you for your time.
Regards,
Liv Chase

ATTACHMENT A

Sec. 14-403. Street access.

A building or structure may only be constructed or moved on a lot, or a dwelling unit added to a lot, where one of the following is met.

(a) Permanently paved and accepted streets or island streets. The lot has the minimum required frontage on either (i) a permanently paved and accepted City street that meets the minimum clear paved width, measured from the edge of the pavement, excluding sidewalks, or (ii) on an existing street on an island in Casco Bay that meets the minimum clear built width, measured from the edges of the built street. The minimum clear width shall be as follows:

1. For one- or two-family dwellings – 25' for streets with parking on both sides;
   18' for streets with parking on one side
   11' for streets with no parking on either side

2. For all other buildings – 28' for streets with parking on both sides
   21' for streets with parking on one side
   14' for streets with no parking on either side

These widths may be reduced with the written approval of the Fire Chief, and the Public Works Director where, in their shared and final determination, the ability to provide City services will not be unreasonably impaired.

(b) Streets to be upgraded in connection with development. The owner or developer of the lot will do all of the following in connection with the development of that lot:

1. Upgrade the street, between the lot and the nearest permanently paved and accepted City street, to meet the standards adopted elsewhere in this Code, including those adopted by the public works authority and the planning authority pursuant to this Code;

2. Take all necessary steps under Chapter 25, Article III, of this Code to dedicate the upgraded portion of the street to the City for acceptance, including a waiver of any claim for damages resulting from the acceptance; and

3. Obtain site plan approval for the work required under this subsection.

(c) Other exceptions. The building or structure is one of the following:

1. An accessory building; or

2. Part of a Planned Residential Unit Development.

ATTACHMENT B

Fire and Life Safety-

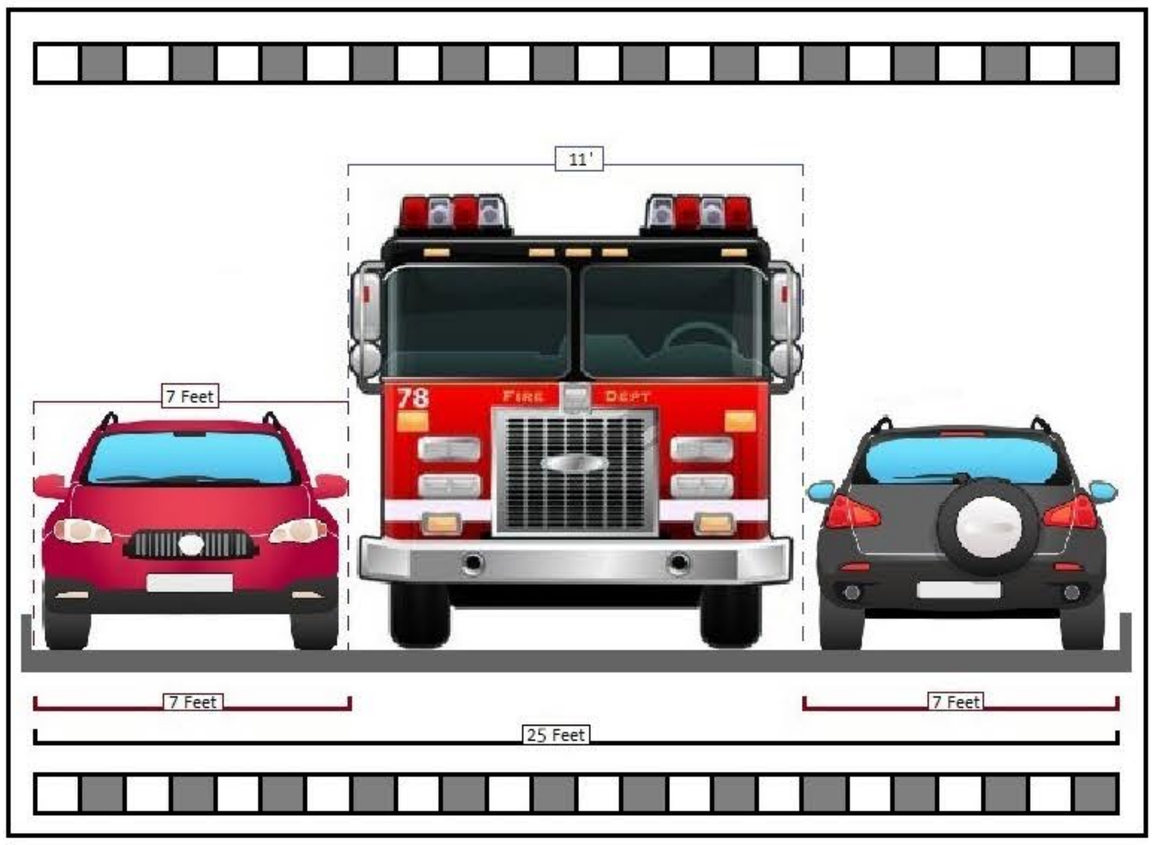

Parking on both sides of the street

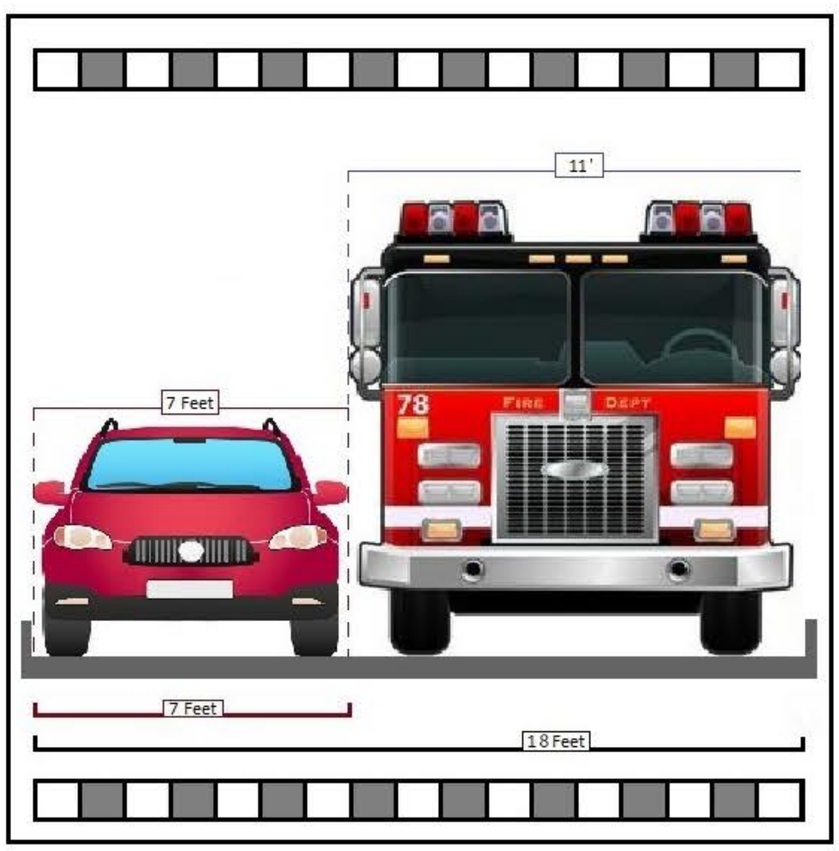

Parking on one side of the street

No parking on either side of the street

7 feet is the minimum width necessary for parallel parking space.
The measurement was based on average vehicle widths and design standards for on-street (parallel) parking space in other municipalities, including the City of Chicago
9.9 feet is the width of most standard fire trucks

Planning Board Meeting Public Comment May 8th 2018

Text Amendment 14-403

Comments regarding **Section A** of this text amendment

Hello my name is Brent Adler, 47/49 Chapel Street. I attended the workshop meeting on March 22nd 2018.

I would like to thank staff for taking the time to improve this section of the land use code. I hope my comments and questions will help in determining that there is no need for Section A of this text amendment.

For your information Boston MA has a population of 687,584 people. Portland has a population of 67,067. I spoke with Michael Rooney of the Boston City Planning department and according to him there is no Code in the City of Boston that restricts the addition or development of any unit on a street that is narrow. Instead, the issue of safety is addressed by zoning ordinances that would allow for a deeper set back of a new building for better access of emergency vehicles. Boston has narrow streets like Portland and is a City in the United States.

Boston Fire department has the same fire truck as engine 31 of the Munjoy Hill Station, a Pierce Enforcer 1250/750. Training for the fire department to work on small accepted paved streets should be the solution to service urban infill and development on small accepted City streets, this would be a worthwhile investment for the future.

According to the discussion at the workshop on March 22 the amendment language clarifies our 35' ROW and adds individualized review on a case by case basis by experts in DPW and Fire for any submission of a unit or development on a street less than 25'. Adding units, whether its one 400 square foot or a 30 unit apartment building adds risk and stress onto emergency vehicles and Staff. It was also determined that City accepted streets are the responsibility of the City to maintain.

Up until now we favored the interpretation of 14-403 that the 35' rule did not apply to accepted City streets. I have given many examples, here are a couple more.

9 Romasco Lane- Planning board approved 4 unit in 2015 with a recent permit extension
Joy Place on the west end- condominium project approved in April 2018

It would be important to know how many permits have been denied based on 14-403 for City accepted Streets, this information would help to determine the current interpretation. Moving forward under the amendment we have clearly defined the paved width creating a moratorium

on streets less than 25’ and slowing urban infill and housing stock in the City. Blacklisting these streets as we develop the 2030 plan.

During the workshop, Chris Branch stated that accepted City streets are the responsibility of the City unlike unimproved non accepted City Street. How will DPW review an exception for a permit on a street less than 25’? Will he be basing his decision on the condition of the street, and if so wouldn't this be the responsibility of the CIty and not a condition of issuing an exception?

During the workshop Chief Gautreau stated that a fire trucks width is roughly 10’ wide but would need 16’ for the outriggers on a ladder truck. Does the fire department use a ladder truck on every call, and if not, what is the working room around a smaller pump truck used for single level access?

If we are going to leave these decision to the experts as Ms Torregrossa stated, why are we not giving them tools to make the decisions with. We have tools for staff during site plan and zoning review. Can we not make this more transparent and in the amendment start to clearly define what an exception would be? Let me give you an example of how my denial letter will read based on the current language of the amendment. My permit for Chapel street is ready for the expert review of the fire department and DPW. It has passed site plan review, design review, code review and zoning. This is what im expecting back from the DPW and the Fire chief when the amendment before you passes

Dear Mr Adler,

Thank you for your request for an exception of 14-403 section A. Unfortunately at this time we do not have the equipment, training, or resources to tend to emergencies at your proposed single family dwelling. This lot is serving the City just fine as a vacant non buildable lot.

Sincerely
DPW and Fire Chief

Ms Torregrossa stated that for each 2 bedroom unit there is up to 4 occupants that are added. And each one of these occupants add risk to the equation for emergency vehicles. Under this logic, in the India Street neighborhood where in a 2 block radius over the past 5 years over 200 2-3 bedroom units have been added, increasing the City occupants load at least 1000 people we should carefully consider if our current emergency response is satisfactory for all these new individuals. At what point will a new fire station be needed under the current logic of risk assessment? I do not see the risk on small City approved streets if the occupancy is managed, we know the stock and paved width of all our adopted streets here on the peninsula, this can be gathered through GIS. Why not take the smallest street, drive a fire truck down it and run a drill? I do not see the need to individualize review on small scale development. Can we not work

from the problem and see if it's possible to service the small streets first rather than declaring 25’ as the minimum. I am more optimistic about the abilities of our public services than declaring that it's impossible to drive down and put out a fire on a narrow street. There are rural roads in northern Maine that pose more of a problem than an urban City that is littered with Sprinkler Systems, building codes, Fire Hydrants and many fire stations. Can we not get some facts about our current equipment, how long are hoses, how many firefighters does it take to respond and extinguish a 400 square foot residential house that is sprinkled?

Finally, if it is the opinion of staff that its too risky to add occupants and services to city approved streets than there should be no reason why we cant add an exception for structures that do not require these level of services. I'm thinking structures such as garages, storage areas, green houses and beehives. Neither of which would need DPW. Thank you for your time.

Brent Adler

Portland Maine Yes. Google's good here.

Jennifer Munson <jmy@portlandmaine.gov>

Fwd: Public Comments for Tonight's Planning Comment Session on 14-403

Barbara Barhydt <bab@portlandmaine.gov> Thu, May 10, 2018 at 8:49 AM
To: "Munson, Jennifer" <jmy@portlandmaine.gov>

public comment for Section 14-403
Barbara Barhydt
Development Review Services Manager
Planning Division
389 Congress Street 4th Floor
Portland, ME 04101
(207) 874-8699
Fax: (207) 756-8256
bab@portlandmaine.gov

---------- Forwarded message ----------
From: **Matt Power** <power.matt@yahoo.com>
Date: Tue, May 8, 2018 at 5:57 PM
Subject: Public Comments for Tonight's Planning Comment Session on 14-403
To: Barbara Barhydt <bab@portlandmaine.gov>, Kim Cook <kcook@portlandmaine.gov>

Good Afternoon,

I'm planning to attend the Planning Board public comment session tonight and present my notes below, but I thought it might be very helpful to include them online, so that people can use the live links to review documents and facts associated with it.

Thank you

Matt Power
Portland
207-619-2713
power.matt@yahoo.com

[Comment Follows]

Esteemed Councilors, Good Evening,

Over the past week, I've been doing my homework, researching some of the questions raised about the proposed text amendment to Section 14-403. I hope the information below is helpful in looking at this amendment from a more nuanced perspective that might encourage more, rather than less, housing development, based on sound economic analysis--if the conditions are right.

As a template to look more closely at the issue of Unaccepted Streets, I selected District 5. It's the section of Portland that seems to have the greatest concentration of unaccepted streets. By combining Google Maps data with Information from the **2017 Transportation and Sustainability Committee** (https://www.portlandmaine.gov/586/Sustainability-Transportation-Committee) and GIS data, I was able to generate a visual representation of all of the unaccepted streets in that district. Here's what the color-coded map reveals.

300 Empty Lots. There are about 300 empty parcels on these streets (icons may represent multiple parcels). Certainly not all of these parcels are buildable, but many are.

Existing Homes. All of these parcels are located on streets that already include other, existing homes.

Streets with no homes on them are not included on the map. Nor are narrow or short streets unlikely to be built upon.

Infrastructure—Already in Place. Most of these properties appear to benefit from multiple levels of City maintenance and infrastructure. Public Works will need to confirm for each street.

Fire Truck Access—Weight Litmus Test. If trash service is provided to an unaccepted road, we know the road--whether paved or packed gravel---can support a 25-ton loaded garbage truck. A loaded Fire Truck typically weighs a similar amount-- 30 tons, fully loaded with water. http://www.dot.state.pa.us/public/pdf/InfoBridge/Approximate%20vehicle%20weights.pdf

The Economic Arguments For and Against Allowing More Housing Development on Unaccepted Streets in Portland

1. **PRO: Ready Made Infrastructure**. Building on open and empty parcels would have minimal costs with regard to city infrastructure, beyond the initial hookup of sewers and water, which could be borne by the owner. Most of the streets, we believe, are already maintained and serviced.

2. **CAVEAT: School Enrollment Must Be Below Capacity**. According to a Massachusetts Study from UMASS Dartmouth 2 years ago (https://www.mhp.net/writable/resources/documents/Cost_Benefit_new_housing_3-15-16.pdf), the one factor that makes the difference in a district's ability to generate enough more revenue from new housing than the additional cost of educating new pupils was the ***existing enrollment capacity of the local school.***

Mass. spends $14,000 per student, about the same as Portland. They looked at the net economic costs and benefits of new residential development. Schools were inevitably the biggest concern at the local level. Research looked at 6 school districts. In half of the districts, new mixed use housing had a **net positive** on the City's bottom line. The other three districts fell into the red economically.

So what happened? The latter three schools were at or past enrollment capacity. That's the deal breaker. However....

3. **PRO: Empty Classroom Seats Put New Housing in the Black**. Researchers found that "The effect of school enrollment on district expenditures had a *statistically significant dependence* on whether or not the school district was operating at or above its enrollment capacity (pvalue= 0.02). In schools with available pupil capacity (i.e. no need to build a new school), new students only cost 61 percent as much per year. That's enough to tip the scales so that new housing contributes more to local fees, taxes, impact fees, and so on than it withdraws.

Suggested Case Study: Riverton Elementary School and District 5

Before making 14-403 more restrictive toward new housing, as the current text amendment suggests, I urge the Board to look closely at just one District. In the light of the research I have linked to above, why not consider the positive implication of bringing hundreds of new families into the area, especially if schools are projected to continue losing students?

I have requested the enrollment history and forecast for Riverton Elementary School in Portland. I will forward it as an addendum to this comment when I get the response. I frankly don't know if the enrollment numbers support my case at this time. From what I can gather from recent news reports, most Portland elementary schools are losing enrollment--other than Reiche. Charter schools are draining away students (http://www.wmtw.com/article/maine-public-school-enrollment-on-the-decline/9641783), It seems likely that the City will see an increasing number of empty seats in schools such as Riverton, without new housing options. This means no new facilities will need to be built, and new students can be added at much lower annual cost.

A Future Pathways To Housing Growth. Finally, If schools are at capacity, there's one other way to make local new housing work, with changes to state policy. **The State Needs to Pay Its Fair Share**. The same Massachusetts new housing study notes that the State receives a huge economic boost from new housing, but often doesn't share that bounty with towns in a way that helps schools. Simply by giving back 8 percent of what they make, they could tip the balance into the black for development and away from local property taxes.

District Five Empty Parcels.pdf
6086K

Vacant Parcels on Unaccepted Streets in District 5, Portland

Data From May 7, 2018--From Google Maps and 2017 Transportation and Sustainability Commitee Results

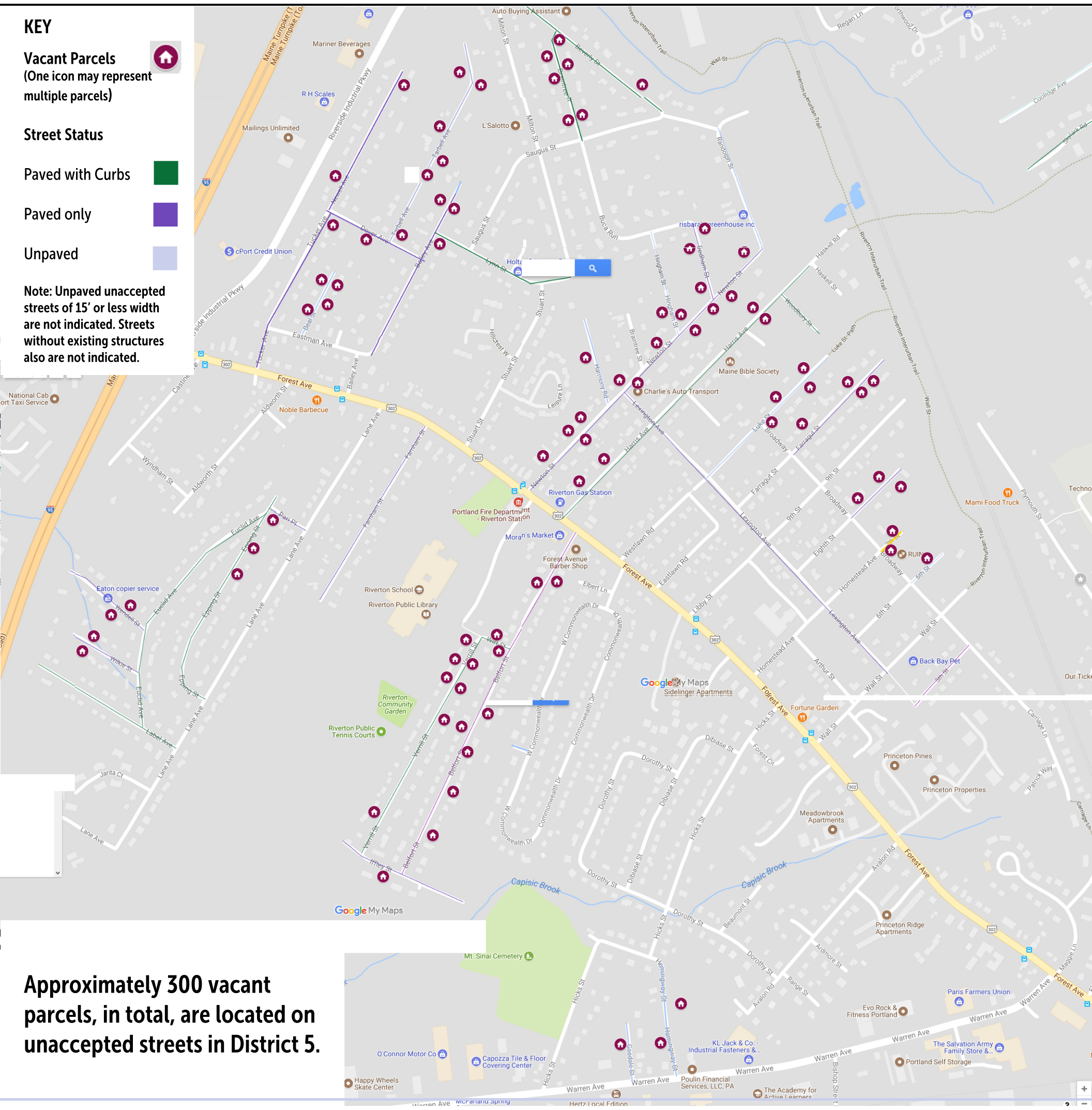

Approximately 300 vacant parcels, in total, are located on unaccepted streets in District 5.

This map is available as an interactive Google Map that can easily be amended and updated. Data that is not yet embedded, but could be, is whether or not each street is maintained by Portland Public Works--in the way of trash and recycling service, sewer and water. All of these streets appear to have electrical service and snowplowing service.

PLANNING BOARD REPORT
PORTLAND, MAINE

82 Hanover Street Redevelopment
Level III Site Plan Review
2018-042
Tom Watson & Co, LLC

Submitted to: Portland Planning Board Date: May 11, 2018 Public Hearing Date: May 17, 2018	Prepared by: Nell Donaldson, Senior Planner CBLs: 34-G-1, 2, 3, 4, & 5 Project #: 2018-042

I. INTRODUCTION

Tom Watson & Co., LLC appears before the Planning Board for a public hearing associated with a Level III site plan review for a redevelopment project at 82 Hanover Street. Notice of this hearing appeared in the *Portland Press Herald on* May 7 and 8, 2018. Notices were sent to 83 property owners within 500 feet and to the interested citizens list.

Applicant: Tom Watson & Co., LLC
Consultants: Will Savage, Acorn Engineering; Ryan Senatore, Ryan Senatore Architecture; Bill Bray, Traffic Solutions; Sarah Cushman, Cushman Transportation Consulting

II. REQUIRED REVIEWS

Waiver Requests	*Applicable Standards*
Driveway Separation – to allow a curb cut approximately 30' from the Hanover/Kennebec Street intersection and Parris/Hanover Street intersection	*Technical Manual,* Section 1.7.2.7. Along local streets, access driveways to corner lots shall be located a minimum of 35' from the intersection of the projection of the right-of-way lines to the centerline of the driveway.
Number of Driveways – to allow four curb cuts on the site	*Technical Manual,* Section 1.7.2.8. No more than two driveways shall be permitted for ingress and egress purposes to any commercial...site.
Compact Parking Spaces – to allow 49% of the 29 parking spaces on site to be designed as compact	*Technical Manual,* Section 1.14. In parking areas of over 10 parking spaces, no more than 20% of parking spaces shall be compact in size.
Parking Lot Layout – to allow parking as designed in the final site plan	*Technical Manual,* Section 1.14. Parking lot layout shall conform to Figures I-28 to I-32.

Review	*Applicable Statute*
Site Plan	*Section 14-526*

III. PROJECT DATA

Existing Zoning	B-7, with small area of B-2b at rear of site
Existing Use	Auto Service/Office
Proposed Use	Commercial
Proposed Development Program	Mixed Use - Restaurant, Retail, Brewery, Bar/Eatery, Fitness Center, Office
Parcel Size	58,059 SF

	Existing	*Proposed*	*Net Change*
Building Footprint	38,696 SF	38,696 SF	0 SF
Building Floor Area	43,572 SF	43,572 SF	0 SF
Impervious Surface Area	58,059 SF	57,456 SF	-600 SF
Parking Spaces	46	39	-7
Bicycle Parking Spaces	0	18	18
Estimated Cost of Project	$1.25 million		

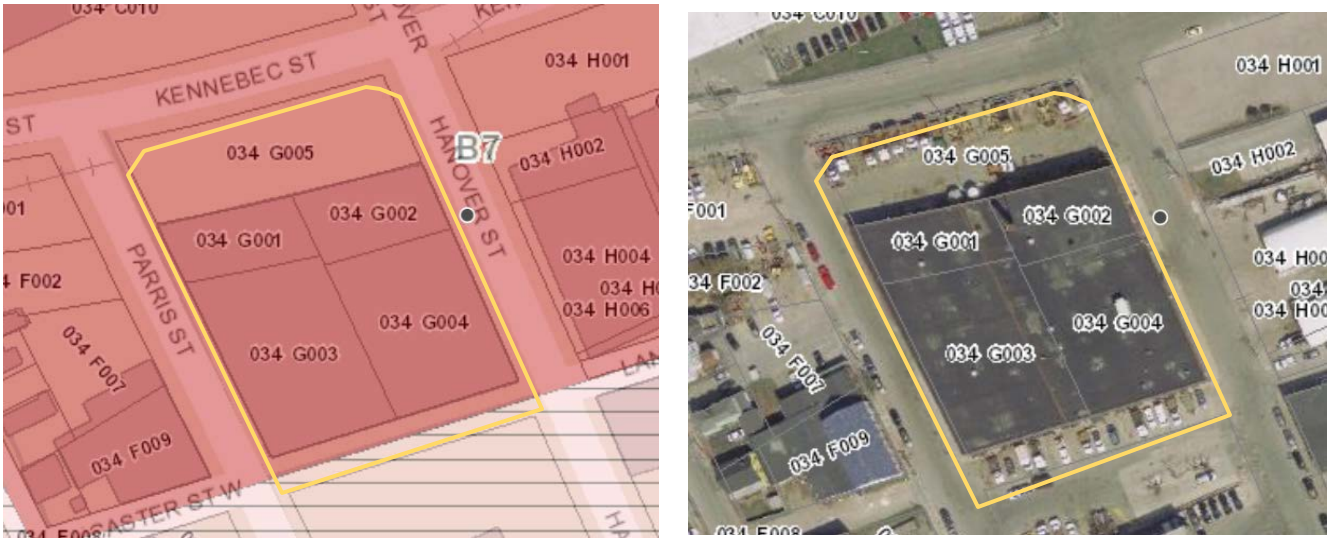

Figures 1 & 2: 82 Hanover Street zoning context (left) and site from above (right)

IV. CONTEXT

82 Hanover Street is located at the corner of Kennebec and Hanover Streets in West Bayside. The property is currently owned by the City of Portland and used as a maintenance facility for the Department of Public Works, but is one of several properties that the city is in the process of selling as a part of the plan to relocate DPW from Bayside to Canco Road. The property and two others directly to the south were recently the subject of a three-lot subdivision review by the Planning Board. The site technically consists of five existing lots, as well as a former right-of-way in Lancaster Street, which was discontinued in 1981.

The site is bounded by Parris Street, Kennebec Street, and Hanover Street. During the recent subdivision review related to this site, the Kennebec Street property line was adjusted to enable the realignment of Kennebec Street to the north of the site, a project which has long been planned by the Department of Public Works. DPW plans to construct the Kennebec Street realignment, including an extension of the Bayside Trail on the north side of the street, in the summer of 2019.

As noted above, the 82 Hanover site was recently the subject of a subdivision review. Under that review, the subdivision plat was required to note that future developers on all of the subdivided lots are required to build to subdivision and *Technical Manual* standards with respect to sidewalks, curbing, street trees, and street lights. The underground utility requirement of the subdivision ordinance was waived. The Planning Board approved the subdivision on March 22, 2018. The plat has not yet been recorded.

The majority of the 82 Hanover site is zoned B-7, with a small portion in the rear zoned B-2b *(Figure 1)*. Fork Food Labs lies directly to the west, two other DPW properties lie to the south, Bayside Bowl lies to the east, and a United States Postal Service building lies to the north across Kennebec Street.

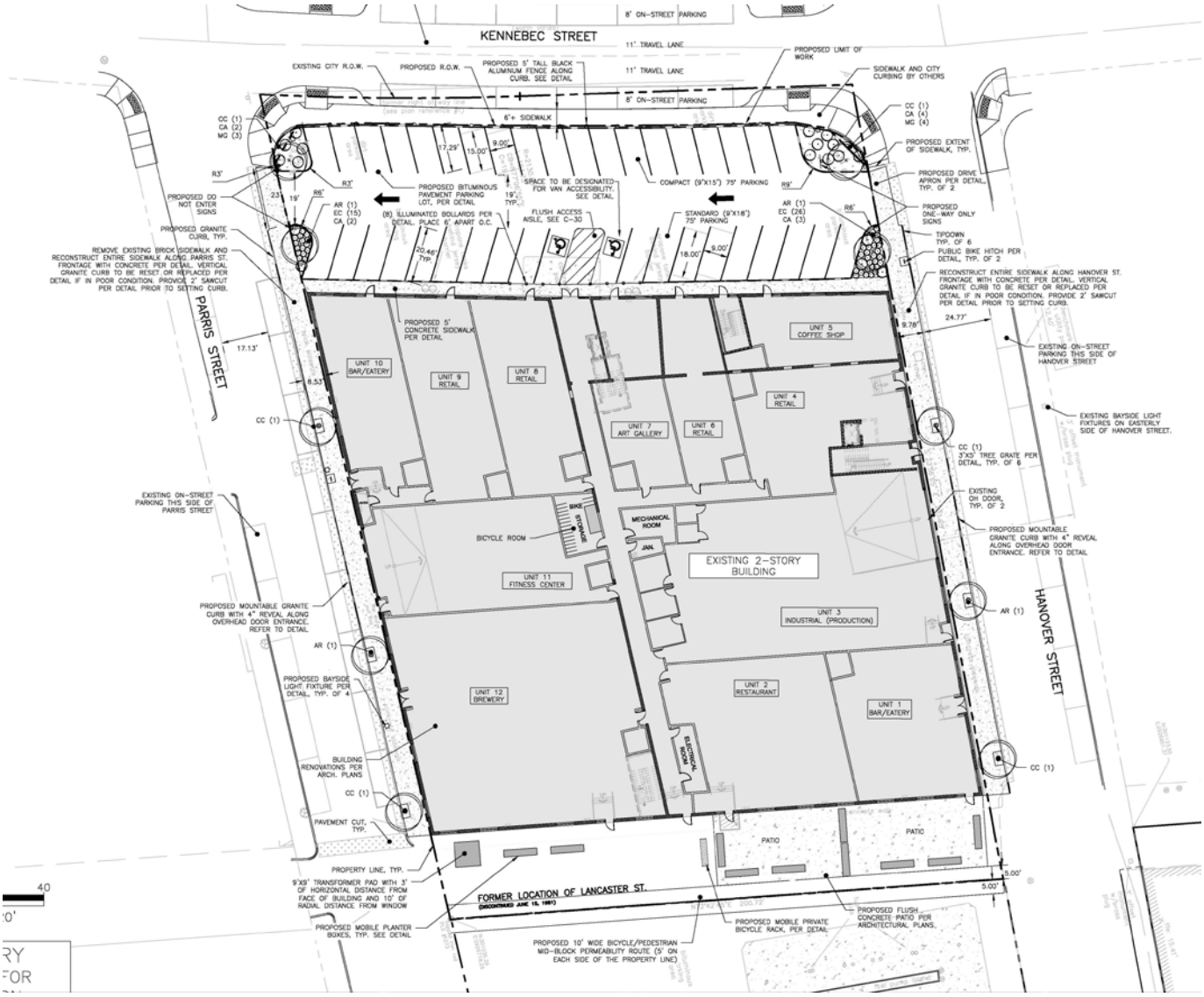

Figures 3 & 4: 82 Hanover Street from the corner of Hanover and Kennebec Streets (top); and final site plan (bottom)

V. PROPOSED DEVELOPMENT

The site is currently occupied with a 1940s brick building which serves the city's Department of Public Works *(Figure 3)*. The applicant has proposed to adaptively reuse this building for retail, restaurant, bar/eatery, brewery, fitness center, and office space and develop the surrounding site to accommodate these uses. The proposal includes 39 newly paved, angled parking spaces at the north end of the site, new concrete sidewalks along Parris and Hanover Streets, street trees along Parris and Hanover Streets, street lights on Parris and Kennebec Streets, and parking lot landscaping. In addition, the applicant has proposed to create an outdoor seating area with moveable planters within the discontinued Lancaster Street right-of-way portion of the site *(Figure 4)*.

It should be noted that, because the Department of Public Works is currently engineering the redesign of the Kennebec Street right-of-way at the north end of the site, and construction is slated for 2019, the applicant's plans do not show any improvements within the Kennebec Street right-of-way. DPW will be responsible for building out the Kennebec Street sidewalks and curbing along the site frontage at such time as the remainder of the realigned street is constructed.

VI. PUBLIC COMMENT

The applicant held the required neighborhood meeting on April 9 at Fork Food Lab and has provided written notes as documentation *(Attachment T)*. At that meeting, attendees raised questions regarding project timeline, tenant mix, landscaping, parking, and use of pervious surfaces. The Planning Division has received no written comments on this application.

VII. RIGHT, TITLE, & INTEREST

As noted above, the City of Portland is the current owner of the property. The applicant submitted a development proposal in response to a city RFP process, and currently holds a purchase and sales agreement as evidence of right, title, and interest (*Attachment D*).

VIII. FINANCIAL & TECHNICAL CAPACITY

The estimated cost of the project is approximately $1.25 million. The applicant has provided a letter from TD Bank attesting to their financial capacity *(Attachment E)*.

IX. ZONING ANALYSIS

As noted above, the majority of the site lies within the B-7 zone, with a small portion in the rear in the B-2b. Per *Section 14-51*, where lots are split by zone lines, the zoning provisions of the less restricted portion of the lot, in this case the B-7, shall extend up to 30 feet into the more restricted portion. As such, no B-2b analysis was completed.

The project involves the adaptive reuse of an existing building. The building is non-conforming with respect to front yard setback. Under the applicant's plans, no modifications to the building footprint or height are proposed. As such, this non-conformity will not be exacerbated, nor will any new non-conformities be created.

X. SITE PLAN SUBMISSION REQUIREMENTS (Section 14-527)

The applicant has provided all submittal requirements, with the exception of capacity to serve letters. These have been suggested as a condition of approval.

The applicant has provided a construction management plan in the final submittal *(Attachment F)*. This construction management plan is not entirely resolved with respect to the treatment of the Kennebec Street frontage, which will not be built out as a product of this application. The applicant has noted that the area of future sidewalks on the south side of Kennebec Street will be loamed and seeded; however, this does not address transitions between sidewalks to be completed along Hanover and Parris Streets or transitions with the parking area. A condition of approval has been suggested to address this concern.

XII. SITE PLAN REVIEW *(Section 14-526)*

The proposed development has been reviewed by staff for conformance with the relevant review standards of the City of Portland's site plan ordinance. Staff comments are below.

1. Transportation Standards

a. Impact on Surrounding Street Systems

Given the proposed uses on the site, including restaurant, bar/eatery, brewery, retail, a coffee shop, fitness center, and office uses, there will be significant trip generation associated with the redevelopment project. The applicant has submitted a Traffic Movement Permit (TMP) application which provides estimated vehicular trip generation figures of 113 during the AM peak hour, 149 during the PM peak hour, and 197 during the Saturday peak hour *(Attachment S)*. These figures have been adjusted to account for shared trips and for non-vehicular trips.

The operational analysis is qualitative in nature and projects that there will be increases in traffic through the Kennebec/Hanover intersection and the Hanover/Marginal Way intersection, which currently experiences some operational challenges, given its close proximity to the intersection of Marginal Way/Preble Street. No high crash locations were identified in the vicinity.

Tom Errico, the city's consulting Traffic Engineer, has reviewed the TMP application and writes,

> *A Traffic Movement Permit Scoping meeting was held on April 23, 2018. A Traffic Assessment was prepared by Bill Bray, PE that summarized traffic and safety impacts from the project in the vicinity of the site. The Assessment documents Existing Traffic Volumes; Safety; Site Trip Generation; Future Traffic Volumes; and Intersection Operations. The following summarizes the outcome of the Traffic Movement Permit review:*
>
> – *Following adjustments for shared land-use trips within the site and multi-modal trips, the project is expected to generate 149 Weekday PM peak hour trips and 197 Saturday peak hour trips.*
> – *The intersections in the immediate vicinity of the site (Hanover Street/Kennebec Street, Parris Street/Kennebec Street, Hanover Street/Portland Street, Parris Street/Portland) will have sufficient capacity to accommodate the new project traffic.*
> – *Outside the immediate project area, Marginal Way intersections experience capacity, multi-modal and safety challenges. Pursuant Chapter 305 of the MaineDOT Rules and Regulations Pertaining to the Traffic Movement Permit, the Applicant shall make a $23,000 contribution towards implementation of the Marginal Way Master Plan. This requirement is to address traffic and pedestrian issues at the Marginal Way intersections with Preble Street/Elm Street, Hanover Street and Forest Avenue.*

b. Access and Circulation

The final site plan shows new concrete sidewalks on both the Parris and Hanover frontages of the site, 8.5' in width along Parris Street and almost 10' in width along Hanover Street. As noted above, the Kennebec Street frontage is not proposed to be completed as a product of this project, as it is slated for reconstruction by the city in 2019. An internal sidewalk is proposed to lead from both the Parris and Hanover frontages to the main entrance of the building, as well as to all tenant entrances on the north side of the building.

The final plans show additional points of pedestrian access across the site within the discontinued Lancaster Street right-of-way at the rear of the building. It should be noted that at the time of this review, the city maintains a public easement in the discontinued Lancaster Street right-of-way. This public easement confers rights of pedestrian and vehicular access over the entire 30' width of the discontinued right-

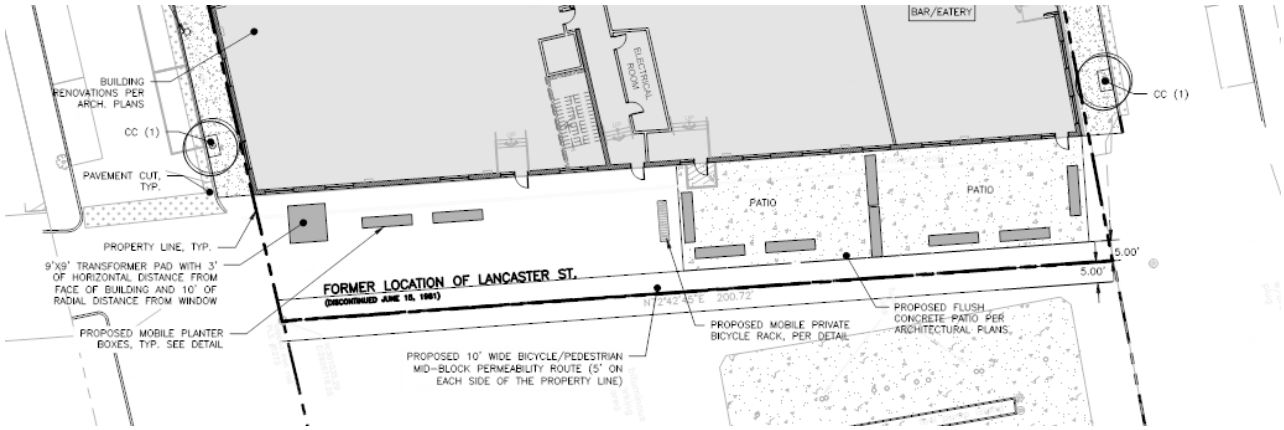

Figure 5: Discontinued Lancaster Street right-of-way, with proposed 10' pedestrian easement.

of-way. Given the findings of the traffic analysis, which shows that the majority of the site's vehicular traffic impact will be directed to the north, the applicant has requested that this easement be extinguished in favor of a 10' wide public pedestrian easement, which would continue to allow members of the public to access uses along the building's southern frontage. No vehicular access in the Lancaster Street right-of-way is proposed. The discontinuance of the public easement requires action by the City Council.

Assuming that the Council takes action to discontinue the public easement, the applicant has drafted the final plans to show the proposed 10' wide public pedestrian easement, 5' of which is proposed to lie on the 82 Hanover site, and 5' of which is proposed to lie on the adjacent 44 Hanover Street property, which is the subject of a separate purchase and sale agreement between the applicant and the City of Portland *(Figure 5)*. This easement would allow mid-block permeability for pedestrians and provide access to the program proposed for the rear of the building, including the brewery and bar/restaurant. Staff has suggested a condition of approval which conditions all planned Lancaster right-of-way improvements on the discontinuance of the public easement and, assuming that the Council supports the discontinuance of the public easement, requires the provision of this public pedestrian easement.

The final site plan shows vehicular access from Hanover Street to a parking area north of the building on the Kennebec Street frontage. This access is designed as one-way and would outlet to Parris Street. Angled parking flanks a 20' aisle in the parking area. Because the access to the parking area from Hanover and to Parris are proximate to the nearest intersections, offset by approximately 30', waivers are required. Mr. Errico writes,

> *Technical Manual, Section 1.7.2.7. notes that along local streets, access driveways to corner lots shall be located a minimum of 35 feet from the intersection of the projection of the right-of-way lines to the centerline of the driveway. The proposed project will provide curb cuts that are approximately 30 feet from the Hanover Street/Kennebec Street and Parris Street/Hanover Street intersections. Given that the driveway are restricted to one-way circulation, the driveways are locate on low volume and speed roadways, and it nearly meets City standards, I support a waiver from the City's corner clearance standard.*

The applicant proposes to close two curb cuts along the Hanover and Parris Street frontages adjacent to the location of overhead doors with beveled curb, as requested by the Department of Public Works. Even with the closure of these two curb cuts, a waiver is required for the four remaining curb cuts on the site. Mr. Errico writes,

Technical Manual, Section 1.7.2.8. No more than two driveways shall be permitted for ingress and egress purposes to any commercial site. The project is providing two one-way driveways servicing the parking lot along Kennebec Street. The project will be modifying the driveways to the overhead doors for limited vehicle use and will have little to no vehicle traffic within Lancaster Street. Given that the Lancaster Street area and the overhead door driveways will have little vehicle traffic, I support a waiver for the number of driveways proposed.

c. *Public Transit Access*

There is no public transit line adjacent to the site. As such, no provisions for public transit access are required.

d. *Parking*

The applicant has provided a parking analysis documenting a peak parking demand for 85 parking spaces *(Attachment Q).* This peak demand is anticipated to occur on weekdays at 7 pm, when the brewery, restaurant, and fitness center uses are at their most intensive. The applicant has taken several allowances in their parking demand analysis to account for use of alternative modes and differences in time of demand.

With respect to supply, the final plans include 39 parking spaces on site, well under the peak demand projection. The applicant's parking analysis includes a plan to lease 16 off-site parking spaces at the Schlotterbeck and Foss building, which lies within 1,500 linear feet and thus satisfies the requirements for off-site parking under *Section 14-334*. Staff has requested that the applicant provide evidence that the provision of spaces at the Schlotterbeck & Foss building will not cause a parking supply and demand imbalance at that site. This has been included as a condition of approval. Provision of a parking lease prior to certificate of occupancy has also been suggested as a condition of approval.

Even with the 16 additional parking spaces, the applicant will not have sufficient supply to technically meet peak parking demand. Instead, the applicant has requested that the parking plan for the first phase of tenant fit-ups be approved at this time, with review of supply and demand associated with future tenant fit-ups at such time as those fit-ups occur. As this analysis would be conducted on an incremental basis, it would allow the applicant to provide a more accurate assessment of both parking demand and supply based on real-time data. At such time as parking supply falls short, additional parking supply would be required to meet the standards of the ordinance. A condition of approval has been drafted to describe this incremental approach to parking demand and supply analysis. Mr. Errico writes,

The Applicant will be required to provide sufficient parking for the initial phase of the project and conduct a parking monitoring study to quantify parking supply requirements for future phases. The Applicant has estimated a parking supply of 51 parking spaces for the initial phase. I find this estimate to be reasonable given the parking analysis conducted by the Applicant. The Applicant has proposed accommodating parking requirements from the 39 parking spaces on-site and accommodating at least 12 parking spaces at the Schlotterbeck & Foss site. I find this approach to be reasonable with the following conditions:

- *The Applicant shall conduct a Parking Demand Study following the occupancy of Phase 1 with the methods of the Study to be reviewed and approved by Planning Staff.*
- *The Applicant shall provide information on parking management and adequacy of conditions at the Schlotterbeck & Foss site for the additional vehicles prior to a Certificate of Occupancy.*

The design of the parking spaces does not conform to an approved layout in the city's *Technical Manual.* However, Mr. Errico has reviewed autoturn analysis of the proposed parking layout and writes,

> *The Applicant has conducted vehicle turn analyses and I find the parking layout to be acceptable. I would note that I support reducing the parking aisle width to 19 feet to address sidewalk encroachment issues. I have no further comment.*

In addition, 19 of the 39 parking spaces proposed on site, or 49%, are designed as compact. This exceeds the maximum allowance for compact parking spaces per the *Technical Manual* and thus requires a waiver. Mr. Errico writes,

> *Technical Manual, Section 1.14 notes that in parking areas of over 10 parking spaces, no more than 20% of parking spaces shall be compact in size. The proposed project is providing 49% of the 39 parking spaces on site to be designed as compact spaces. Given site constraints (the existing building and the Kennebec Street Improvement project limit design space), the width of the parking spaces comply with standard parking space dimensions and the need to accommodate on-site parking, I support a waiver.*

The 19 compact parking spaces on the north side of the parking area are designed to abut the Kennebec Street sidewalk. In order to address concerns about encroachment, the applicant has proposed a low fence along the property line in this area. Mr. Errico writes,

> *I continue to recommend implementation of a design treatment or redesign of the parking area such that encroachment onto to sidewalk is prevented. I would note that I do not support the Applicant's suggestion that the curb will prevent compact size vehicles from encroaching onto the sidewalk. It seems unlikely that the parking area can be managed 24 hours a day to ensure that only low clearance vehicles are using the spaces.*

A condition of approval has been drafted to address both this comment and related design comments regarding the buffering of surface parking in the B-7 zone.

18 bicycle parking spaces are shown on the plan, including 14 at the rear of the site and 4 on Hanover and Parris Streets. The applicant's floor plans also show an interior bike room with space for 18 additional bicycles. Together, these two facilities far exceed the bicycle parking requirement.

e. Transportation Demand Management

The applicant has submitted a Transportation Demand Management (TDM) Plan which sets trip and parking reduction targets of 5% over the first 3-5 years of operation *(Attachment R)*. The plan also establishes an active mode split target of an additional 3% over this same time frame. In order to achieve these goals, the plan includes the designation of a TDM coordinator as well as a number of direct investments in TDM. The floor plans include ground floor storage for bicycles and on-site showers within each tenant space. The applicant proposes to unbundle parking and charge tenants for parking, subsidize transit or rideshare, subsidize bicycle maintenance, subsidize bike share membership, encourage flexible work schedules, provide TDM education, and run targeted promotions to support mode shifts. Staff has reviewed the plan and found that it meets *Technical Manual* requirements.

2. Environmental Quality Standards

a. Preservation of Significant Natural Features

There are no known significant natural features on the site.

b. Landscaping and Landscape Preservation

The applicant's final landscape plan includes American hornbeam and red maples as street trees along the Parris and Hanover frontages and understory plantings including clethra, sweetgale, echinacea, and reed grass in four islands at the corners of the parking area on the north side of the site. In the final submittal, the applicant has acknowledged that they have not technically provided sufficient landscaping to meet the street tree standards of the land use code and *Technical Manual,* which require street trees for commercial sites to be spaced 30'-45' on center along all street frontages. In response, staff has suggested a condition of approval that the applicant contribute to the tree fund for five additional street trees to be placed on the north side of Kennebec Street adjacent to the site.

In addition, the applicant has not provided screening for a transformer proposed at the rear of the site. This fixture may be relocated in the future; in any future location, this transformer will require screening. A condition of approval has been suggested to address this comment.

c. Water Quality/Storm Water Management/Erosion Control

The site is currently entirely impervious, with both building and surface parking area. The impervious area is proposed to decrease by 600 SF as a product of the site plan application. The applicant has provided a plan showing the areas of the site where the flow of stormwater will be altered, which qualify as 'redevelopment' under DEP definitions, and the area of the site that will be 'maintained.' Because the area to be redeveloped is less than 5,000 SF, no treatment is required. The applicant has noted that the addition of landscaping, new catch basins with hoods, and 3' sumps in the parking area will improve the quality of stormwater leaving the site.

The plans show a 12" underdrain within the parking area which outlets to an existing separated storm drain in Parris Street. Roof drains are proposed to outlet to the combined system in Hanover Street. At the rear of the site, stormwater is proposed to sheet flow to existing drainage structures within the adjacent streets, as it currently does. Lauren Swett, the city's consulting civil engineer, has reviewed the plans and has no further comments.

3. Public Infrastructure and Community Safety Standards

a. Consistency with Related Master Plans

The project is generally deemed consistent with related master plans.

b. Public Safety and Fire Prevention

In the final plan submittal, the applicant has proposed on-street parking on both sides of Parris Street, bringing the effective width of Parris to 17.13'. On-street parking is proposed only on the east side of Hanover, leaving more than 24' of clear width where the building is addressed. Robert Thompson, of the city's Fire Prevention Bureau, has reviewed the plans and has no further comments.

c. Availability and Capacity of Public Utilities

The building is currently served by utilities, including sewer service to Parris Street and domestic and fire water from Parris Street as well. The applicant has proposed new gas service and new underground electrical service from Parris Street. Existing overhead electrical service from both Parris and Hanover are slated for removal.

The new electrical service is proposed to run through a transformer in the discontinued Lancaster right-of-way, where a 30' city sewer easement, coterminous with the right-of-way, currently exists. While the transformer and the associated underground electrical lines are offset from the 44" brick sewer line that lies in the center of this easement, it could present challenges in terms of future sewer maintenance. Staff has requested that the transformer be relocated. In response to this concern, the applicant has proposed the

Lancaster right-of-way location as a temporary solution, writing that, "should Tom Watson acquire 44 Hanover, the transformer could be relocated to this parcel…" *(Attachment V).* The relocation of the transformer to 44 Hanover would not only avoid conflict with the sewer easement, but allow better opportunity for screening as required by the site plan ordinance. A condition of approval has been drafted to address the location of the transformer.

In the final submittal, the applicant has indicated that solid waste will be handled within the building and hauled off by a private contractor.

4. Site Design Standards

a. Massing, Ventilation, and Wind Impact

The bulk, location, or height of the proposed buildings will not change under the proposal. No health or safety problems from a reduction in ventilation to abutting structures are anticipated.

b. Shadows

The project is not anticipated to result in shadows on publicly accessible open space.

c. Snow and Ice Loading

The project is not anticipated to result in snow or ice accumulation on public ways or adjacent properties.

d. View Corridors

The project does not abut a protected view corridor.

e. Historic Resources

The site does not lie adjacent to or within 100 feet of a historic landmark, district, or landscape.

f. Exterior Lighting

In the final submittal, the applicant has proposed new Bayside street light fixtures on Parris and Kennebec Street. In addition, sconces are proposed on the Hanover and Lancaster right-of-way frontages. All proposed fixtures are full cutoff, and the photometric plan meets the *Technical Manual* standards for illumination levels.

g. Noise and Vibration

In the final submittal, the applicant has noted that HVAC will be placed on the roof at least 25' from the edge of the building.

h. Signage and Wayfinding

No new wayfinding is proposed. Future signs permits will be subject to the B-7 design standards.

i. Zoning-Related Design Standards

The applicant has proposed minor changes to the building, including new windows and doors, projecting canopies, and recessed storefronts, with a new primary entry on the Kennebec Street elevation. Caitlin Cameron, the city's Urban Designer, has reviewed the elevations against the B-7 standards of the city's *Design Manual,* and identified a concern with respect to screening requirements for surface parking. The applicant has proposed to provide a green screen or fence to screen the parking area. The final design of this screen/fence remains unresolved. Ms. Cameron writes,

> *The Applicant added a guardrail and green screen to better meet th[e streetscape design] standard, however, staff question the viability of plantings in such small volume of soil with impervious surface surrounding it. If there is not room for landscape/plantings, a screen*

wall is a better option.

A condition of approval has been drafted to require resolution of this issue.

XIV. RECOMMENDATION

Subject to the proposed motions and conditions of approval listed below, Planning Division staff recommends that the Planning Board approve the proposed redevelopment at 82 Hanover Street.

XIV. MOTIONS

A. WAIVERS

On the basis of the application, plans, reports and other information submitted by the applicant; findings and recommendations contained in the Planning Board report for the public hearing on May 17, 2018 for application 2018-042 relevant to Portland's site plan ordinance, technical and design standards, and other regulations; and the testimony presented at the Planning Board hearing:

1. The Planning Board [**finds/does not find**], based upon the consulting transportation engineer's review, that extraordinary conditions exist or undue hardship may result from strict compliance with the *Technical Manual* standard *(Section 1.7.2.7)* which requires that along local streets, access driveways to corner lots shall be located a minimum of 35' from the intersection of the projection of the right-of-way lines to the centerline of the driveway, that substantial justice and the public interest are secured with the proposed variation in this standard, and that the variation is consistent with the intent of the ordinance. The Planning Board [**waives/does not waive**] the *Technical Manual* standard *(Section 1.7.2.7)* to allow the driveway cut on Fore Street approximately 30' from the corners of Parris and Kennebec and Hanover and Kennebec as shown on the final plans.

2. The Planning Board [**finds/does not find**], based upon the consulting transportation engineer's review, that extraordinary conditions exist or undue hardship may result from strict compliance with the *Technical Manual* standard *(Section 1.7.2.8)* which states that no more than two driveways shall be permitted for ingress and egress purposes to any commercial site, that substantial justice and the public interest are secured with the proposed variation in this standard, and that the variation is consistent with the intent of the ordinance. The Planning Board [**waives/does not waive**] the *Technical Manual* standard *(Section 1.7.2.8)* to allow four curb cuts as shown on the final plans.

3. The Planning Board [**finds/does not find**], based upon the consulting transportation engineer's review *(Attachment 1),* that extraordinary conditions exist or undue hardship may result from strict compliance with the *Technical Manual* standard (*Section 1.14)* limiting compact spaces to 20% of total parking supply, that substantial justice and the public interest are secured with the variation in this standard, and that the variation is consistent with the intent of the ordinance. The Planning Board [**waives/does not waive**] the Technical Manual standard (*Section 1.14)* to allow 49% compact spaces.

4. The Planning Board [**finds/does not find**], based upon the consulting transportation engineer's review *(Attachment 1),* that extraordinary conditions exist or undue hardship may result from strict compliance with the *Technical Manual* standard *(Section 1.14)* that requires that parking lot layout conform to Figures I-28 to I-32, that substantial justice and the public interest are secured with the variation in this standard, and that the variation is consistent with the intent of the ordinance. The Planning Board [**waives/does not waive**] the Technical Manual standard (*Section 1.14)* to allow the parking lot layout as shown on the final site plan.

B. TRAFFIC MOVEMENT PERMIT

On the basis of the application, plans, reports and other information submitted by the applicant; findings and recommendations contained in the Planning Board report for the public hearing on May 24, 2016 for application 2015-169 relevant to Portland's technical and design standards and other regulations; and the testimony presented at the Planning Board hearing, the Planning Board finds that the proposed plan [is/is not] in conformance with 23 MRSA 704-A and Chapter 305 Rules and Regulations pertaining to Traffic Movement Permits.

1. Outside the immediate project area, Marginal Way intersections experience capacity, multi-modal and safety challenges. Pursuant Chapter 305 of the MaineDOT Rules and Regulations Pertaining to the Traffic Movement Permit, the Applicant shall make a $23,000 contribution towards implementation of the Marginal Way Master Plan. This requirement is to address traffic and pedestrian issues at the Marginal Way intersections with Preble Street/Elm Street, Hanover Street and Forest Avenue.

C. DEVELOPMENT REVIEW

On the basis of the application, plans, reports and other information submitted by the applicant; findings and recommendations contained in the Planning Board Report for the public hearing on May 17, 2018 for application 2018-042 relevant to the site plan regulations; and the testimony presented at the Planning Board hearing, the Planning Board finds that the plan [is/is not] in conformance with the site plan standards of the land use code, subject to the following conditions of approval that must be met prior to the issuance of a building permit, unless otherwise stated:

1. The applicant shall provide evidence of sewer capacity from the Department of Public Works and water capacity from the Portland Water District for review and approval by the Planning Authority;

2. The applicant shall provide a revised construction management plan including details on the treatment of sidewalk transitions and the Kennebec Street frontage in the interim condition, prior to the realignment of Kennebec Street, for review and approval by the Department of Public Works;

3. Approval of all site plan improvements shown in the Lancaster Street right-of-way are conditioned upon the City Council formally discontinuing the existing public easement in this right-of-way and the applicant providing a 10' wide public pedestrian easement as shown on the site plan between Parris Street and Hanover Street in the vicinity of the Lancaster Street right-of-way for review and approval by Corporation Counsel, the Department of Public Works, and the Planning Authority;

4. Prior to certificate of occupancy, the applicant shall provide:
   a. Documentation on the adequacy of parking supply at the location of the proposed off-site parking, and
   b. A lease for off-site parking complying with the requirements of Division 20 of the land use code

   for review and approval by Corporation Counsel and the Planning Authority. At such time as the first phase fit-up as proposed in the site plan application is complete, the applicant shall provide an updated analysis of parking demand and supply for review and approval by the Planning Authority. Any additional supply required for the second phase of tenant fit-ups shall be provided per the provisions of Division 20 for review and approval by the Planning Authority;

5. The applicant shall provide a contribution for five street trees for review and approval by the City Arborist;

6. Within one year of the issuance of a certificate of occupancy, the applicant shall provide revised plans showing a final location of the proposed transformer outside of the existing Lancaster utility easement, including screening in accordance with the site plan standards of the land use code, for review and approval by the Department of Public Works and the Planning Authority. This approval by the Planning Board of the temporary location of the transformer does not constitute a waiver by the City of Portland to any objections it may have to interference with its sewer easement. At all times during which the proposed transformer is located within the sewer easement area, the City reserves its right to access the sewer as needed, including its right to insist that the applicant, its successors, and assigns move the transformer at applicant's sole expense. The applicant shall be solely responsible for any impacts to the transformer associated with the City's use of the Lancaster utility easement area, including, without limitation, maintenance, repair, or replacement of the existing 44-inch diameter brick sewer; and

7. The applicant shall provide a final detail for the proposed Kennebec Street parking screen that prevents encroachment of parked cars into the right-of-way and meets the design standards of the B-7 zone for review and approval by the Planning Authority.

XV. ATTACHMENTS

PLANNING BOARD REPORT ATTACHMENTS

1. Traffic Engineer review (memo from Thomas Errico, 5/10/18)
2. Civil Engineer review (memos from Lauren Swett, 5/10/18 and 5/11/18)
3. Fire Prevention Bureau review (memo from Mike Thompson, 5/11/18)
4. Urban Designer review (memo from Caitlin Cameron, 5/8/18)

APPLICANT'S SUBMITTALS

A. Cover Letter
B. Level III Site Plan Application
C. Wastewater Capacity Letter
D. Right, Title, & Interest
E. Financial Capacity
F. Construction Management plan
G. Stormwater Management Plan
H. Erosion & Sedimentation Control
I. Utilities
J. Solid Waste Disposal
K. Fire Departemnt Letter
L. Conformity with Land Use Ordinance
M. Waivers
N. Easements
O. Architectural Design Narrative
P. Lighting
Q. Parking Analysis
R. TDM Plan
S. TMP Application & Traffic Assessment
T. Neighborhood Meeting Minutes
U. Comment Response Letter
V. Comment Response Letter

PLANS

Plan 1. Cover Sheet
Plan 2. General Notes
Plan 3. Existing Conditions
Plan 4. Construction Management Plan
Plan 5. Site & Landscape Plan
Plan 6. Utility Plan
Plan 7. Grading & Drainage Plan
Plan 8. Site Details 1
Plan 9. Site Details 2
Plan 10. Landscaping Details
Plan 11. Utility Details 1
Plan 12. Utility Details 2
Plan 13. Drainage Details
Plan 14. Erosion Control Details
Plan 15. 1st Floor Plan
Plan 16. 2nd Floor Plan
Plan 17. North Elevation
Plan 18. North Corner Elevations
Plan 19. Southeast & East Elevations
Plan 20. Southeast & West Elevations
Plan 21. East & West Elevations
Plan 22. North & South Elevations
Plan 23. East & West Perspectives
Plan 24. South Perspectives
Plan 25. Main Canopy Details
Plan 26. Tenant Canopy Details
Plan 27. Turning Template

Att. 1

Portland Maine Yes. Google's good here.

Helen Donaldson <hcd@portlandmaine.gov>

82 Hanover Street - Final Traffic Comments

Tom Errico <thomas.errico@tylin.com> Thu, May 10, 2018 at 2:02 PM
To: Helen Donaldson <HCD@portlandmaine.gov>
Cc: Jeremiah Bartlett <JBartlett@portlandmaine.gov>, "Hyman, Bruce" <bhyman@portlandmaine.gov>, "kgray@portlandmaine.gov" <kgray@portlandmaine.gov>, "Jeff Tarling (JST@portlandmaine.gov)" <JST@portlandmaine.gov>

Hi Nell – I have reviewed the application materials and offer the following final traffic comments as a status update of previous comments.

- A MaineDOT Traffic Movement Permit (TMP) is required for the project based upon trip generation estimates. Accordingly, the Applicant will be submitting a TMP Application with the intent of scheduling a traffic study scoping meeting. The study is likely to include, at a minimum, the Hanover Street intersections with Portland Street and Kennebec Street and the Marginal Way/Hanover Street intersection. I noted that a financial contribution towards the implementation of transportation system improvements in the project vicinity may be required and would be considered as part of the traffic study.

  Status: A Traffic Movement Permit Scoping meeting was held on April 23, 2018. A Traffic Assessment was prepared by Bill Bray, PE that summarized traffic and safety impacts from the project in the vicinity of the site. The Assessment documents Existing Traffic Volumes; Safety; Site Trip Generation; Future Traffic Volumes and Intersection Operations. The following summarizes the outcome of the Traffic Movement Permit review:

  - **Following adjustments for shared land-use trips within the site and multi-modal trips, the project is expected to generate 149 Weekday PM peak hour trips and 197 Saturday peak hour trips.**
  - **The intersections in the immediate vicinity of the site (Hanover Street/Kennebec Street, Parris Street/Kennebec Street, Hanover Street/Portland Street, Parris Street/Portland Street) will have sufficient capacity to accommodate the new project traffic.**
  - **Outside the immediate project area, Marginal Way intersections experience capacity, multi-modal and safety challenges. Pursuant Chapter 305 of the MaineDOT Rules and Regulations Pertaining to the Traffic Movement Permit, the Applicant shall make a $23,000 contribution towards implementation of the Marginal Way Master Plan. This requirement is to address traffic and pedestrian issues at the Marginal Way intersections with Preble Street/Elm Street, Hanover Street and Forest Avenue.**

- The site plan design will likely result in vehicle encroachment for the parking spaces abutting the 6-foot sidewalk along Kennebec Street. Redesign of the parking lot layout or provision of barrier treatment should be considered to prevent encroachment.

  Status: I continue to recommend implementation of a design treatment or redesign of the parking area such that encroachment onto to sidewalk is prevented. I would note that I do not support the Applicant's suggestion that the curb will prevent compact size vehicles from encroaching onto the sidewalk. It seems unlikely that the parking area can be managed 24 hours a day to ensure that only low clearance vehicles are using the spaces. It is my understanding that Planning staff is working on a Condition of Approval for addressing this issue.

- The project site plan includes several driveways and conditions do not meet City Technical Standards for number of driveways. The Applicant shall provide documentation in support of a formal waiver request for the number of driveways. Reduction in the number of driveways or intended function should be considered.

Status: Technical Manual, Section 1.7.2.8 notes that no more than two driveways shall be permitted for ingress and egress purposes to any commercial site. The project is providing two one-way driveways servicing the parking lot along Kennebec Street. The project will be modifying the existing driveways to the overhead doors for limited vehicle use and will have little to no vehicle traffic within Lancaster Street. Given that the Lancaster Street area and the overhead door driveways will have little vehicle traffic, I support a waiver for the number of driveways.

- The project will require off-site parking to satisfy peak parking demand. I would note that shared parking opportunities with nearby businesses, particularly those that have offsetting time of day parking demand characteristics would be acceptable.

Status: The Applicant will be required to provide sufficient parking for the initial phase of the project and conduct a parking monitoring study to quantify parking supply requirements for future phases. The Applicant has estimated a parking supply of 51 parking spaces for the initial phase. I find this estimate to be reasonable given the parking analysis conducted by the Applicant. The Applicant has proposed accommodating parking requirements from the 39 parking spaces on-site and accommodating at least 12 parking spaces at the Schotterback & Foss site. I find this approach to be reasonable with the following conditions:

- **The Applicant shall conduct a Parking Demand Study following the occupancy of Phase 1 with the methods of the Study to be reviewed and approved by Planning Staff.**
- **The Applicant shall provide information on parking management and adequacy of conditions at the Schotterback & Foss site for the additional vehicles prior to a Certificate of Occupancy.**

- Any changes that increase public on-street parking supply cannot be used for meeting the projects parking requirements.

Status: The Applicant is no longer proposing use of on-street parking spaces for satisfying parking requirements. I have no further comment.

- The proposed parking lot does not meet City Technical Dimensional Standards. The applicant shall provide supporting documentation as part of a formal waiver request.

Status: The Applicant has conducted vehicle turn analyses and I find the parking layout to be acceptable. I would note that I support reducing the parking aisle width to 19 feet to address sidewalk encroachment issues. I have no further comment.

<u>Additional Comments</u>

- **Technical Manual, Section 1.7.2.7 notes that along local streets, access driveways to corner lots shall be located a minimum of 35 feet from the intersection of the projection of the right-of-way lines to the centerline of the driveway. The proposed project will provide curb cuts that are approximately 30 feet from the Hanover Street/Kennebec Street and Parris Street/Hanover Street intersections. Given that the driveways are restricted to one-way circulation, the driveways are located on low volume and speed roadways, and it nearly meets City standards, I support a waiver from the City's corner clearance standard.**

- **Technical Manual, Section 1.14 notes that in parking areas of over 10 parking spaces, no more than 20% of parking spaces shall be compact in size. The proposed project is providing 49% of the 39 parking spaces on site to be designed as compact spaces. Given site constraints (the existing building and the Kennebec Street Improvement project limit design space), the width of the parking spaces comply with standard parking space dimensions and the need to accommodate on-site parking, I support a waiver.**

If you have any questions, please contact me.

Best regards,

Thomas A. Errico, PE
Senior Associate
Traffic Engineering Director
T·Y·LIN INTERNATIONAL
12 Northbrook Drive
Falmouth, ME 04105
+1.207.781.4721 main
+1.207.347.4354 direct
+1.207.400.0719 mobile
+1.207.781.4753 fax
thomas.errico@tylin.com
Visit us online at www.tylin.com
Twitter | Facebook | LinkedIn | Google+

"One Vision, One Company"

Att. 2

Portland Maine Yes. Google's good here.

Helen Donaldson <hcd@portlandmaine.gov>

final comments on 82 Hanover - last call

Lauren Swett <lswett@woodardcurran.com> Thu, May 10, 2018 at 4:42 PM
To: Helen Donaldson <hcd@portlandmaine.gov>

Hi Nell,

My only remaining comment is that the connection from the parking lot to the Catch Basin in Hanover Street will not be allowed by the City. Based on the feedback from Brad, and my review of the plans, their options would be to increase the size of their underdrain and tie the basin to that so that it drains back towards Parris Street, or they could regrade that area, remove the basin, and allow the drainage to go into the street where it will be collected by the City's basins in the street.

If you need anything else, let me know.

Thanks,

Lauren

From: Helen Donaldson <hcd@portlandmaine.gov>
Sent: Thursday, May 10, 2018 4:37 PM
To: Lauren Swett <lswett@woodardcurran.com>; Jeff Tarling <jst@portlandmaine.gov>; Bruce Hyman <bhyman@portlandmaine.gov>; Keith Gray <kgray@portlandmaine.gov>; Robert Thompson <rmt@portlandmaine.gov>
Subject: final comments on 82 Hanover - last call

[Quoted text hidden]

Notice: Under Maine law, documents - including e-mails - in the possession of public officials or city employees about government business may be classified as public records. There are very few exceptions. As a result, please be advised that what is written in an e-mail could be released to the public and/or the media if requested.

Portland Maine Yes. Google's good here.

Helen Donaldson <hcd@portlandmaine.gov>

draft conditions of approval

Lauren Swett <lswett@woodardcurran.com> Fri, May 11, 2018 at 12:54 PM
To: Helen Donaldson <hcd@portlandmaine.gov>

Looks good! No CB connection anymore. You should be able to take out that condition.

Lauren

From: Helen Donaldson <hcd@portlandmaine.gov>
Sent: Friday, May 11, 2018 12:37 PM
To: Lauren Swett <lswett@woodardcurran.com>
Subject: Fwd: draft conditions of approval

There's not a chance you could look at this and let me know if you're good, could you? Then we'd be able to eliminate this condition!

Nell

---------- Forwarded message ----------
From: **William Savage** <wsavage@acorn-engineering.com>
Date: Fri, May 11, 2018 at 12:21 PM
Subject: RE: draft conditions of approval
To: Helen Donaldson <hcd@portlandmaine.gov>, Michael Barton <michael.corbett.barton@gmail.com>
Cc: Sam Lebel <slebel@acorn-engineering.com>

Nell,

Two revised plans that eliminate the following comments/conditions.

Updated the drive aisle to be 19 ft in width.

The applicant shall revise the Grading & Drainage Plan to eliminate the proposed connection into the catch basin in Hanover Street for review and approval by the Department of Public Works; We took Lauren's advice and increased the size of the underdrain and eliminated the connection to Hanover.

- **Will**

Att. 3

Portland Maine Yes. Google's good here.

Helen Donaldson <hcd@portlandmaine.gov>

final comments on 82 Hanover - last call

Robert Thompson <rmt@portlandmaine.gov> Fri, May 11, 2018 at 10:08 AM
To: Helen Donaldson <hcd@portlandmaine.gov>

Hi Nell,

The newest plan looks good to me, shows what was requested.

Thank you,
Mike
[Quoted text hidden]
--
Robert M. Thompson
Division Fire Chief
Portland Fire Department
(207) 874-8400
rmt@portlandmaine.gov

Planning and Urban Development Department
Planning Division

Subject: B-7 Design Review – 82 Hannover Street

Written by: Caitlin Cameron, Urban Designer

Date of Review: Tuesday, May 8 2018

The alterations to the building at 82 Hanover Street was reviewed according to the *City of Portland Design Manual* standards by Caitlin Cameron, Urban Designer, against *the B7 Bayside Mixed Use Urban District Standards* (Section (f) and Appendix 4 of the Design Manual).

Design Review Comments*: (questions and unmet standards in red)*

(f) B-7 Bayside Mixed Use Urban District Zone
b. Design Standards: *All major and minor development reviewed under the provisions of the Bayside B-7 zone shall be* ***designed to support the development of this urban neighborhood as a dense, mixed-use, pedestrian friendly neighborhood*** *in accordance with the standards contained in the Bayside Design Standards, promulgated by the Planning Board, and contained in the Appendix 4 of this section.*

Principle A Urban Design – The project reuses an existing building and the building relationship to the street will not change.

- A-1 Sense of Place: The increase in window openings, additional doors, canopies, and mixed-use activity will contribute to this standard to encourage sense of place, foot traffic, and neighborhood amenity. The project meets the standard regarding adaptive reuse and respecting the "patina" and age of the existing neighborhood fabric.
- A-5 Pedestrian Environment: The design and landscaping of the sidewalk could mitigate the impact of the surface parking lot between the street and the building on Kennebec Street**. Applicant added a guardrail and screen between the sidewalk and surface parking.**

Principle B Access and Circulation *– Streets and sidewalks in Bayside shall be designed to encourage a pedestrian friendly, walkable environment. The goal is to create streets that are scaled and designed for pedestrian and bicycle use; are well landscaped;*

- B-9 Streetscape Design: The landscape design is limited to the corners of the surface parking. **Applicant added a guardrail and green screen to better meet this standard,** however, staff question the viability of plantings in such small volume of soil with impervious surface surrounding it. If there is not room for landscape/plantings, a screen wall is a better option.
- B-11 Lighting: The Technical Manual is under revision – the Bayside Medium fixture is required on those sidewalks not covered by cobrahead lighting. Spacing is shown per Technical Manual and staff direction but lights should be in black color, LED 3000 K – Sheet C41 detail for Bayside Medium light should be revised to reflect black color, LED 3000 K.

Principle C Parking, Loading, and Service Areas – *Parking, loading and service areas shall be designed and located so as to present an attractive façade to neighboring use, to minimize their visual presence in the neighborhood, and to minimize the impact along pedestrian oriented streets and residential areas.*

- C-6 Surface Lots: This standard requires that areas devoted to surface parking shall be screened from public rights of way with design elements such as planting, fencing, grade changes, and/or walls. A landscape border is required around all surface parking lots. Landscaped islands are also required. **Given the limited space between the surface parking and sidewalk, a screened or fence would also serve this intent.**

Principle D Open Space and the Public Realm – Not applicable – no publicly accessible open space is proposed.

Principle E Architectural Design

- E-1 Architectural Design: Not applicable – adaptive reuse.
- E-6 Entrances: The main entrance will be emphasized with glass and a canopy. The primary entrance is not allowed to be oriented to a parking lot – this project is constrained by existing conditions, however. Multiple tenant entries facing all sides of building/street. Tenant entries are emphasized with canopies and blade signs.
- E-7 Windows: Windows are being increased in size on some facades. **Transparency is required on the ground floor – applicant confirmed this will be the case.**
- E-8 Storefronts: Doors are proposed at frequent intervals. **Glass will be transparent.**
- E-9 Back Sides of Buildings: The project increases the amount of transparency and activity on all facades, thus improving the current situation and better meeting this standard. Entrances should be highly visible to help navigate the building.
- E-10 Rooftop Appurtenances: Current submission does not indicate rooftop mechanicals - Any new rooftop appurtenances proposed shall be consolidated physically or visually with screening. They should be designed to appear as an integral part of the architecture of the building. **Applicant response says "All rooftop appurtenances will be located on the roof a minimum of 25' from the roof edge to eliminate visibility from street level. They will also be consolidated as much as possible."**
- E-11 Fences and Walls: If walls/fences are proposed for screening, the standard requires high quality, durable materials. See standard for further elaboration.
- E-13 Transparency: **Applicant responded that new glazing will be minimally tinted and have a VT of .7 or greater.** Opaque or spandrel glass is not allowed at the pedestrian level.
- E-16 Signage – **Signage was revised to show tenant signage on the blade sign only as requested by staff.** A master sign plan is required for review that meets the requirements of this standard. Future tenant signs will be held to the B-7 sign standards.

Att. A

ACORN ENGINEERING, INC.

Planning Division
City of Portland, Maine
389 Congress Street, 4th Floor
Portland, ME 04101

February 26, 2018

Subject: Level III Final Site Plan Application
Redevelopment of 82 Hanover Street - Portland, Maine

To Whom It May Concern:

On behalf of Tom Watson & Co., LLC, we are pleased to submit the accompanying package of submission materials related to the proposed redevelopment of 82 Hanover Street.

This submission package is intended to meet the City's Submission Requirements as outlined in the Level III Site Plan Application procedures. The lot is currently occupied by a 40,768 SF auto service/office building which served the City's Public Works Department. The property is now under a Purchase & Sale Agreement with the Applicant. Consistent with the proposal selected by the Economic Development Committee and approved by the City Council in 2017, the project proposes to renovate the existing building into a multitude of uses including eateries, offices, and retailers. The vision for the building is to provide a mix of new uses and businesses in the area to enhance the pedestrian street activity and add to the vibrancy of the neighborhood.

Additionally, the site will be updated, providing parking at the front of the building and a patio area at the rear with ample public access and continuity with the adjacent street networks. This project has been designed in conjunction the City's redesign/reconstruction of Kennebec Street and will encourage multimodal transportation with three street frontages and a location central to pedestrian and bicycle activity. The promotion of bicycle and pedestrian transportation is in line with both the Comprehensive Plan and the zone's purpose description. The site is in the B-7 mixed development zone in which the proposed building uses are permitted.

Tom Watson & Co., LLC, and the design team look forward to your review of this project and are requesting to be placed on the next available meeting with the Planning Board. If you have any questions regarding these materials or the completeness of the application materials, please contact us within the next five (5) days.

Sincerely,

William H. Savage, P.E.
Principal - Project Manager
Acorn Engineering, Inc.

The following documents and drawings will be uploaded onto the City's electronic submission site per the procedure outlined in the application:

Documents:

- Section A: Cover Letter
- Section B: Level III Final Site Plan Application
- Section C: Wastewater Capacity
- Section D: Right, Title, Interest
- Section E: Financial Capacity
- Section F: Construction Management Plan
- Section G: Stormwater Management Report
- Section H: Erosion and Sedimentation Control Report
- Section I: Utility Cover
- Section J: Solid Waste Disposal
- Section K: Fire Department Letter
- Section L: Conformity with Land Use Ordinance
- Section M: Request for Waivers
- Section N: Summary of Written Easements
- Section O: Architectural Design Narrative
- Section P: Lighting
- Section Q: Parking Analysis

Drawings:

- Civil Site Plan Set, Dated 2/26/18
- Architectural Plan Set, Dated 2/22/18

Level III – Preliminary and Final Site Plans
Development Review Application
Portland, Maine

Planning and Urban Development Department
Planning Division

Portland's Planning and Urban Development Department coordinates the development review process for site plan, subdivision and other applications under the City's Land Use Code. Attached is the application form for a Level III: Preliminary or Final Site Plan. Please note that Portland has delegated review from the State of Maine for reviews under the Site Location of Development Act, Chapter 500 Stormwater Permits, and Traffic Movement Permits.

Level III: Site Plan Development includes:

- New structures with a total floor area of 10,000 sq. ft. or more except in Industrial Zones.
- New structures with a total floor area of 20,000 sq. ft. or more in Industrial Zones.
- New temporary or permanent parking area(s) or paving of existing unpaved parking areas for more than 75 vehicles.
- Building addition(s) with a total floor area of 10,000 sq. ft. or more (cumulatively within a 3 year period) except in Industrial Zones.
- Building addition(s) with a total floor area of 20,000 sq. ft. or more in Industrial Zones.
- A change in the use of a total floor area of 20,000 sq. ft. or more in any existing building (cumulatively within a 3 year period).
- Multiple family development (3 or more dwelling units) or the addition of any additional dwelling unit if subject to subdivision review.
- Any new major or minor auto business in the B-2 or B-5 Zone, or the construction of any new major or minor auto business greater than 10,000 sq. ft. of building area in any other permitted zone.
- Correctional prerelease facilities.
- Park improvements: New structures greater than 10,000 sq. ft. and/or facilities encompassing 20,000 sq. ft. or more (excludes rehabilitation or replacement of existing facilities); new nighttime outdoor lighting of sports, athletic or recreation facilities not previously illuminated.
- Land disturbance of 3 acres or more (includes stripping, grading, grubbing, filling or excavation).

Portland's development review process and requirements are outlined in the Land Use Code (Chapter 14), Design Manual and Technical Manual.

Planning Division
Fourth Floor, City Hall
389 Congress Street
(207) 874-8719
planning@portlandmaine.gov

Office Hours
Monday thru Friday
8:00 a.m. – 4:30 p.m.

I. Project Information (Please enter n/a on those fields that are not applicable)

Project Name:	82 Hanover Street
Proposed Development Address:	82 Hanover Street
Project Description:	Building renovations/change of use with associated site improvements
Chart/Block/Lot:	034 G001001
Preliminary Plan	N/A
Final Plan	See Civil Plan Set attached

II. Contact Information (Please enter n/a on those fields that are not applicable)

APPLICANT

Name:	Tom Watson & Co., LLC
Business Name:	N/A
Address:	188 State Street, 3rd Floor
City/State:	Portland, ME
Zip Code:	04101
Work #:	N/A
Home #:	N/A
Cell #:	207-252-0358
Fax #:	N/A
E-mail:	tom@portpropmgt.com

OWNER

Name:	Tom Watson & Co., LLC
Address:	188 State Street, 3rd Floor
City/State:	Portland, ME
Zip Code:	04101
Work #:	N/A
Home #:	N/A
Cell #:	207-252-0358
Fax #:	N/A
E-mail:	tom@portpropmgt.com

AGENT/REPRESENTATIVE

Name:	Acorn Engineering, Inc.
Address:	P.O. Box 3372
City/State:	Portland, ME
Zip Code:	04104
Work #:	207-775-2655
Home #:	N/A
Cell #:	207-317-1884
Fax #:	N/A
E-mail:	wsavage@acorn-engineering.com

BILLING (to whom invoices will be forwarded to)

Name:	Tom Watson & Co., LLC
Address:	188 State Street, 3rd Floor
City/State:	Portland, ME
Zip Code:	04101
Work #:	N/A
Home #:	N/A
Cell #:	207-252-0358
Fax #:	N/A
E-mail:	tom@portpropmgt.com

ENGINEER

Name:	Acorn Engineering, Inc.
Address:	P.O. Box 3372
City/State:	Portland, ME
Zip Code:	04104
Work #:	207-775-2655
Home #:	N/A
Cell #:	207-317-1884
Fax #:	N/A
E-mail:	wsavage@acorn-engineering.com

SURVEYOR

Name:	Titcomb Associates
Address:	133 Gray Road
City/State:	Falmouth, ME
Zip Code:	04105
Work #:	207-797-9199
Home #:	N/A
Cell #:	N/A
Fax #:	207-878-3142
E-mail:	rcroteau@titcombsurvey.com

ARCHITECT

Name:	Ryan Senatore Architecture
Address:	565 Congress Street #304
City/State:	Portland, ME
Zip Code:	04101
Work #:	207-747-5159
Home #:	N/A
Cell #:	207-650-6414
Fax #:	N/A
E-mail:	ryan@senatorearchitecture.com

ATTORNEY

Name:	William H. Leete, Jr.
Address:	PO Box 7740
City/State:	Portland, ME
Zip Code:	04112
Work #:	(207) 879-9440
Home #:	
Cell #:	
Fax #:	
E-mail:	wleete@leelem.com

DESIGNATED PERSON(S) FOR UPLOADING INTO e-PLAN

Name:	Sam Lebel
E-mail:	slebel@acorn-engineering.com
Name:	Alyssa Gartley
E-mail:	agartley@acorn-engineering.com
Name:	William Savage
E-mail:	wsavage@acorn-engineering.com

III. APPLICATION FEES

LEVEL III DEVELOPMENT (check applicable review)

[X]	Less than 50,000 sq. ft.	$750.00
[ ]	50,000 – 100,000 sq. ft.	$1,000.00
[ ]	100,000 – 200,000 sq. ft.	$2,000.00
[ ]	200,000 – 300,000 sq. ft.	$3,000.00
[ ]	Over 300,000 sq. ft.	$5,000.00
[ ]	Parking lots over 100 spaces	$1,000.00
[ ]	After-the-fact Review	$1,000.00 + applicable application fee above

PLAN AMENDMENTS (check applicable review)

[ ]	Planning Staff Review	$250.00
[ ]	Planning Board Review	$500.00

OTHER REVIEWS (check applicable review)

[ ]	Traffic Movement	$1,500.00
[ ]	Stormwater Quality	$250.00
[ ]	Subdivision	$500.00 + applicable fee for lots/units below
	# of Subdivision Lots/Units [ ] x $25.00 each	$
[ ]	Site Location	$3,500.00 + applicable fee for lots/units below
	# of Site Location Lots/Units [ ] x $200.00 each	$
[X]	Change of Use	
[ ]	Flood Plain	
[ ]	Shoreland	
[ ]	Design Review	
[ ]	Housing Replacement	
[ ]	Historic Preservation	
	TOTAL APPLICATION FEE DUE:	$

IV. FEES ASSESSED AND INVOICED SEPARATELY

- Notices to abutters (receipt of application, workshop and public hearing meetings) ($.75 each)
- Legal Ad in the Newspaper (% of total ad)
- Planning Review ($52.00 hour)
- Legal Review ($75.00 hour)
- Third Party Review (all outside reviews or analysis, eg. Traffic/Peer Engineer, are the responsibility of the applicant and will be assessed and billed separately)

V. PROJECT DATA (Please enter n/a on those fields that are not applicable)

TOTAL AREA OF SITE	58,059 sq. ft.
PROPOSED DISTURBED AREA OF THE SITE	17,500 sq. ft.
If the proposed disturbance is greater than one acre, then the applicant shall apply for a Maine Construction General Permit (MCGP) with DEP and a Stormwater Management Permit, Chapter 500, with the City of Portland.	
IMPERVIOUS SURFACE AREA	
Impervious Area (Total Existing)	57,956 sq. ft.
Impervious Area (Total Proposed)	57,456 sq. ft.
Building Ground Floor Area and Total Floor	
Building Footprint (Total Existing)	38,696 sq. ft.
Building Footprint (Total Proposed)	38,696 sq. ft.
Building Floor Area (Total Existing)	43,572 sq. ft.
Building Floor Area (Total Proposed)	43,572 sq. ft.
ZONING	
Existing	B-7
Proposed, if applicable	
LAND USE	
Existing	Auto Service/Office
Proposed	Restaurants, Retail, and Office Space
RESIDENTIAL, IF APPLICABLE	
# of Residential Units (Total Existing)	
# of Residential Units (Total Proposed)	
# of Lots (Total Proposed)	
# of Affordable Housing Units (Total Proposed)	
PROPOSED BEDROOM MIX	
# of Efficiency Units (Total Proposed)	
# of One-Bedroom Units (Total Proposed)	
# of Two-Bedroom Units (Total Proposed)	
# of Three-Bedroom Units (Total Proposed)	
PARKING SPACES	
# of Parking Spaces (Total Existing)	46
# of Parking Spaces (Total Proposed)	39
# of Handicapped Spaces (Total Proposed)	2
BICYCLE PARKING SPACES	
# of Bicycle Spaces (Total Existing)	0
# of Bicycle Spaces (Total Proposed)	14
ESTIMATED COST OF THE PROJECT	$1.25 million

VI. APPLICANT SIGNATURE

By digitally signing the attached document(s), you are signifying your understanding this is a legal document and your electronic signature is considered a ***legal signature*** per Maine state law.

I hereby certify that I am the Owner of record of the named property, or that the owner of record authorizes the proposed work and that I have been authorized by the owner to make this application as his/her authorized agent. I agree to conform to all applicable laws of this jurisdiction. In addition, if a permit for work described in this application is issued, I certify that the Planning Authority and Code Enforcement's authorized representative shall have the authority to enter all areas covered by this permit at any reasonable hour to enforce the provisions of the codes applicable to this permit.

This application is for a Level III Site Plan review. It is not a permit to begin construction. An approved site plan, a Performance Guarantee, Inspection Fee, Building Permit, and associated fees will be required prior to construction. Other Federal, State or local permits may be required prior to construction, which are the responsibility of the applicant to obtain.

Signature of Applicant:	
Date:	2.26.2018

FINAL PLAN - Level III Site Plan			
Applicant Checklist	Planner Checklist	# of Copies	**GENERAL WRITTEN SUBMISSIONS CHECKLIST (* If applicant chooses to submit a Preliminary Plan, then the * items were submitted for that phase and only updates are required)**
X		1	* Completed Application form
X		1	* Application fees
X		1	* Written description of project
X		1	* Evidence of right, title and interest
N/A		1	* Evidence of state and/or federal permits
X		1	* Written assessment of proposed project's specific compliance with applicable Zoning requirements
X		1	* Summary of existing and/or proposed easements, covenants, public or private rights-of-way, or other burdens on the site
X		1	* Evidence of financial and technical capacity
X		1	Construction Management Plan
N/A		1	A traffic study and other applicable transportation plans in accordance with Section 1 of the technical Manual, where applicable.
N/A		1	Written summary of significant natural features located on the site (Section 14-526 (b) (a))
X		1	Stormwater management plan and stormwater calculations
X		1	Written summary of project's consistency with related city master plans
X		1	Evidence of utility capacity to serve
X		1	Written summary of solid waste generation and proposed management of solid waste
X		1	A code summary referencing NFPA 1 and all Fire Department technical standards
N/A		1	Where applicable, an assessment of the development's consistency with any applicable design standards contained in Section 14-526 and in City of Portland Design Manual
X		1	Manufacturer’s verification that all proposed HVAC and manufacturing equipment meets applicable state and federal emissions requirements.

Applicant Checklist	Planner Checklist	# of Copies	**SITE PLAN SUBMISSIONS CHECKLIST** **(* If applicant chooses to submit a Preliminary Plan, then the * items were submitted for that phase and only updates are required)**
X		1	* Boundary Survey meeting the requirements of Section 13 of the City of Portland's Technical Manual
		1	**Final Site Plans including the following:**
X		Existing and proposed structures, as applicable, and distance from property line (including location of proposed piers, docks or wharves if in Shoreland Zone);	
X		Existing and proposed structures on parcels abutting site;	
X		All streets and intersections adjacent to the site and any proposed geometric modifications to those streets or intersections;	
X		Location, dimensions and materials of all existing and proposed driveways, vehicle and pedestrian access ways, and bicycle access ways, with corresponding curb lines;	
X		Engineered construction specifications and cross-sectional drawings for all proposed driveways, paved areas, sidewalks;	
X		Location and dimensions of all proposed loading areas including turning templates for applicable design delivery vehicles;	
X		Existing and proposed public transit infrastructure with applicable dimensions and engineering specifications;	
X		Location of existing and proposed vehicle and bicycle parking spaces with applicable dimensional and engineering information;	
X		Location of all snow storage areas and/or a snow removal plan;	
N/A		A traffic control plan as detailed in Section 1 of the Technical Manual;	
N/A		Proposed buffers and preservation measures for significant natural features, where applicable, as defined in Section 14-526(b)(1);	
N/A		Location and proposed alteration to any watercourse;	
N/A		A delineation of wetlands boundaries prepared by a qualified professional as detailed in Section 8 of the Technical Manual;	
N/A		Proposed buffers and preservation measures for wetlands;	
X		Existing soil conditions and location of test pits and test borings;	
X		Existing vegetation to be preserved, proposed site landscaping, screening and proposed street trees, as applicable;	
X		A stormwater management and drainage plan, in accordance with Section 5 of the Technical Manual;	
X		Grading plan;	
X		Ground water protection measures;	
X		Existing and proposed sewer mains and connections;	

- Continued on next page -

X		Location of all existing and proposed fire hydrants and a life safety plan in accordance with Section 3 of the Technical Manual;
X		Location, sizing, and directional flows of all existing and proposed utilities within the project site and on all abutting streets;
X		Location and dimensions of off-premises public or publicly accessible infrastructure immediately adjacent to the site;
X		Location and size of all on site solid waste receptacles, including on site storage containers for recyclable materials for any commercial or industrial property;
X		Plans showing the location, ground floor area, floor plans and grade elevations for all buildings;
N/A		A shadow analysis as described in Section 11 of the Technical Manual, if applicable;
N/A		A note on the plan identifying the Historic Preservation designation and a copy of the Application for Certificate of Appropriateness, if applicable, as specified in Section Article IX, the Historic Preservation Ordinance;
X		Location and dimensions of all existing and proposed HVAC and mechanical equipment and all proposed screening, where applicable;
N/A		An exterior lighting plan in accordance with Section 12 of the Technical Manual;
X		A signage plan showing the location, dimensions, height and setback of all existing and proposed signs;
X		Location, dimensions and ownership of easements, public or private rights of way, both existing and proposed.

Att. C

CITY OF PORTLAND WASTEWATER CAPACITY APPLICATION

Department of Public Services,
55 Portland Street,
Portland, Maine 04101-2991

Date: FEBRUARY 26, 2018

Bradley Roland, P.E.
Water Resources Division

1. Please, Submit Utility, Site, and Locus Plans.

Site Address: 82 HANOVER STREET

Chart Block Lot Number: 034 G001001

Proposed Use: EATERIES, OFFICES & RETAILERS
Previous Use: AUTO SERVICE / OFFICES
Existing Sanitary Flows: 120 GPD
Existing Process Flows: 0 GPD
Description and location of City sewer that is to receive the proposed building sewer lateral.

EXISTING 12" VITRIFIED CLAY SEWER MAIN WITHIN PARRIS STREET

Site Category		
	Commercial *(see part 4 below)*	X
	Industrial *(complete part 5 below)*	
	Governmental	
	Residential	
	Other *(specify)*	

Clearly, indicate the proposed connections, on the submitted plans.

2. Please, Submit Contact Information.

City Planner's Name: TBD Phone: _____
Owner/Developer Name: TOM WATSON & CO. LLC
Owner/Developer Address: 138 STATE STREET, 3RD FLOOR, PORTLAND ME 04101
Phone: (207) 252-0358 Fax: N/A E-mail: TOM@PORTPROPMGT.COM
Engineering Consultant Name: ACORN ENGINEERING, INC
Engineering Consultant Address: 153 DANFORTH ST. PORTLAND, ME 04102
Phone: (207) 775-2655 Fax: N/A E-mail: WSAVAGE@ACORN-ENGINEERING.COM

Note: Consultants and Developers should allow +/- 15 days, for capacity status, prior to Planning Board Review.

3. Please, Submit Domestic Wastewater Design Flow Calculations.

Estimated Domestic Wastewater Flow Generated: SEE ATTACHED TABLE GPD
Peaking Factor/ Peak Times: _____
Specify the source of design guidelines: *(i.e.__"Handbook of Subsurface Wastewater Disposal in Maine," __ "Plumbers and Pipe Fitters Calculation Manual," __ Portland Water District Records, Other (specify)* _____

Note: Please submit calculations showing the derivation of your design flows, either on the following page, in the space provided, or attached, as a separate sheet.

4. Please, Submit External Grease Interceptor Calculations.

Total Drainage Fixture Unit (DFU) Values: TBD

Size of External Grease Interceptor: _____

Retention Time: _____

Peaking Factor/ Peak Times: _____

Note: In determining your restaurant process water flows, and the size of your external grease interceptor, please use The Uniform Plumbing Code. Note: In determining the retention time, sixty (60) minutes is the minimum retention time. Note: Please submit detailed calculations showing the derivation of your restaurant process water design flows, and please submit detailed calculations showing the derivation of the size of your external grease interceptor, either in the space provided below, or attached, as a separate sheet.

5. Please, Submit Industrial Process Wastewater Flow Calculations

Estimated Industrial Process Wastewater Flows Generated: N/A GPD

Do you currently hold Federal or State discharge permits? Yes ____ No ____

Is the process wastewater termed categorical under CFR 40? Yes ____ No ____

OSHA Standard Industrial Code (SIC): *(http://www.osha.gov/oshstats/sicser.html)*

Peaking Factor/Peak Process Times: _____

Note: On the submitted plans, please show where the building's domestic sanitary sewer laterals, as well as the building's industrial-commercial process wastewater sewer laterals exits the facility. Also, show where these building sewer laterals enter the city's sewer. Finally, show the location of the wet wells, control manholes, or other access points; and, the locations of filters, strainers, or grease traps.

Note: Please submit detailed calculations showing the derivation of your design flows, either in the space provided, or attached, as a separate sheet.

Calculation of Wastewater Flowrate for 82 Hanover Redevelopment

The proposed project will include the redevelopment of an existing two-story building with auto service space on the ground level and office space on the second floor. The proposed changes in use of the existing building include restaurants, retail, and office space. Based upon the Section 4 of the Maine Subsurface Wastewater Disposal Rules, the project anticipates the following daily flows:

Estimate of Design Flows			
Classification of Water Demand	**Number of Units**	**Gallons per Day per unit**	**Total Gallons per Day**
Existing			
Office (Employee at place of employment without showers: 12 GPD per employee)	10	12	120
Proposed			
Bar/ Eatery (12 GPD per employee + 15 GPD per seat)	5 employees 40 seats	12 15	660
Eating Place, 2 meals/day (20 GPD per seat + 12 GPD per employee)	10 employees 60 seats	12 20	1,320
Warehouse (100 GPD or 12 GPD per employee, whichever is greater)	-	-	100
Office/Retail (Employee at place of employment without showers: 12 GPD per employee)	20	12	240
Coffee shop/Bakery (100 GPD + 12 GPD per employee)	4	12	148
Fitness Center (50 GPD per 100 SF)	30	50	1,500
Small Brewery (2,500 GPD* + 12 GPD per employee or customer)	30 employees/customers	12	2,860
		Total Existing	**120**
		Total Proposed	**6,708**
		Net Change	**+6,828 GPD**

Section D

Right, Title, or Interest

Section D - Right, Title, or Interest

A copy of the Purchase and Sale Agreement for Tom Watson & Co., LLC is included in this section.

Parcel 4

PURCHASE AND SALE AGREEMENT

THIS PURCHASE AND SALE AGREEMENT IS made this 24th day of October, 2017 by and between the City OF PORTLAND, a body politic and corporate located in Cumberland County, Maine, (hereinafter referred to as "Seller" or "City"), and Tom Watson & Co., LLC, or assigns, a Maine limited liability company having a mailing address of 104 Grant Street, Portland, ME 04101 (hereinafter referred to as "Buyer").

RECITALS

WHEREAS, the CITY is the owner of approximately 1.25 acres of land at or near 82 Hanover Street, Portland, Maine as generally depicted as Parcel 4 on the plan attached hereto as Exhibit A together with all buildings and other improvements located thereon (the "Premises") and incorporated herein; and

WHEREAS, Buyer desires to purchase the Premises, and the City desires to convey the Premises to Buyer;

NOW THEREFORE, in consideration of the foregoing and for other good and valuable consideration, the receipt and sufficiency of which is hereby acknowledged, the parties, intending to be legally bound, hereby agree as follows:

1. **SALE AND EFFECTIVE DATE.** City agrees to sell the Premises to Buyer, and Buyer agrees to purchase the Premises in accordance with the terms and conditions set forth in this Agreement. This Agreement is for the sale of land and buildings located at or about 82 Hanover Street. This Agreement shall become effective following the occurrence of both of the following: approval of this Agreement by the City Council of the City in substantially this form, and the City Manager's execution of this Agreement. The first calendar day after which both such events have occurred is hereinafter referred to as the "Effective Date". All deadlines and time periods set forth in this Agreement, including, without limitation, the Due Diligence Period, Financing Period and Closing Date shall be computed from the Effective Date.

2. **CONSIDERATION**. The purchase price for the Premises shall be Two Million Three Hundred Fifty Thousand ($2,350,000) (the "Purchase Price"), subject to the following cost adjustments and conditions:

    a. Buyer shall deposit the sum of Twenty-Five Thousand Dollars ($25,000.00) (the "Deposit") within 3 business days after the Effective Date of this Agreement that the parties agree will be held in escrow in a non-interest bearing account with CBRE | The Boulos Company; the Deposit shall be fully refundable until the later of the expiration of the Due Diligence Period or the Financing Period, as both are described herein; after the expiration of both such Periods, the Deposit shall be non-refundable except as expressly set forth herein, including, without limitation in paragraphs 3 and 10; and

b. The Buyer shall pay the remainder of the Purchase Price to the City by wire transfer (or as otherwise reasonably requested by the City) at closing.

3. TITLE AND DUE DILIGENCE.

a. Due Diligence Period. Subject to extension as set forth in Paragraph 3(b) and (d), Buyer will have from the Effective Date of this Agreement until 4:00 PM Eastern Standard Time on the day that is sixty (60) days after the Effective Date of this Agreement (the "Due Diligence Period") to complete any survey, environmental review and title examinations, and to undertake such other investigations, testing or inspections as Buyer shall deem appropriate.

b. Property Description. The property description contained in the deed will be a survey description based upon a Boundary Survey performed by a Maine Licensed Surveyor to be obtained by the City (the "Survey") which will more specifically describe the property shown on Exhibit A hereto (the "Premises Description") in form reasonably acceptable to the City and Buyer. The Premises Description will be distributed to the parties hereto at least thirty (30) days prior to expiration of the Due Diligence Period. If the Premises Description is not received by City and Buyer at least thirty (30) days prior to the expiration of the Due Diligence Period, the Due Diligence Period shall be extended to a date thirty (30) days after it is received. The parties will agree on the final Premises Description prior to closing. If the parties cannot agree upon the final Premises Description prior to closing, then Buyer shall have the option to (1) terminate this Agreement and obtain a refund of the Deposit (after which neither party will have any further obligation or liability to the other under this Agreement) or (2) waive the approval provision and close.

c. Financing Contingency. Buyer shall have from the Effective Date of this Agreement until 4:00 PM Eastern Daylight Savings Time on the day that is sixty (60) days after the Effective Date of this Agreement (the "Financing Period") to obtain a commitment for commercially reasonable financing acceptable to Buyer, provided, however, if the Due Diligence Period shall be extended, then the Financing Period shall be extended to expire on the same date as the expiration of the Due Diligence Period. Buyer shall take timely and commercially reasonable steps to secure such financing. If Buyer does not obtain a financing commitment acceptable to Buyer within the Financing Period, Buyer may terminate this Agreement by notice in writing to City, or may elect to close under the Agreement despite the lack of such commitment. If Buyer so exercises its right to terminate this Agreement, then the City shall refund to Buyer the Deposit, if previously paid, without interest, within ten (10) days after receipt of Buyer's termination notice, and neither party shall have any further obligations or liabilities under this Agreement except as expressly set forth in this Agreement. Any termination notice sent by Buyer with respect to this Agreement may merely state that Buyer elects to terminate this Agreement, shall have no formal requirements, and shall be immediately effective.

d. Title, Survey and Environmental Objections. In addition to the Survey described above, the City agrees it has caused a Phase II Environmental study of the Premises to be performed. Buyer will have until the end of the Due Diligence Period to deliver to City any written objections to title, environmental, or survey matters that Buyer determines materially affect insurability of title at standard rates, or the use of the Premises, the value of the Premises, the cost of development of or cost or feasibility of construction on the Premises. Objections not made prior to the end of the Due Diligence Period will be deemed waived; provided, however, that objections pertaining to matters of record first appearing after the end of the Due Diligence Period may be made at any time prior to the closing. If the Survey and any environmental study (including, without limitation any Phase II Environmental study) are not completed and distributed to the parties at least thirty (30) days prior to the expiration of the Due Diligence Period, the Due Diligence Period will be extended to a date thirty (30) days after the date upon which the later of the Survey or any environmental study to be completed and received are completed and are received by Buyer and City.

e. Option to Cure. In the event of a title, Survey or environmental objection by Buyer, City will have the option, but not the obligation, to cure the objection and will notify Buyer of its election within ten (10) business days after receipt of the objection. In the event that the City elects to cure the objection, it will have sixty (60) days from the date of the notice of election, or such other reasonable time as the parties may agree, to cure the objection. In the event that the City does not elect to cure the objection, or, having elected to cure the objection fails to timely do so to Buyer's reasonable satisfaction, Buyer will have the option to (1) terminate this Agreement and obtain a refund of the Deposit (after which neither party will have any further obligation or liability to the other under this Agreement), (2) waive the objection and close, or (3) undertake the cure of such objection at its own expense (in which case it shall have 60 days to do so).

f. Deed. City shall convey the Premises to Buyer at the closing in fee simple by a municipal quitclaim deed without covenant. Title shall be good and insurable title at standard rates, free and clear of all encroachments, liens and encumbrances except (i) easements consented to by Buyer; (ii) easements for utilities servicing the property, (iii) City ordinances, and (iv) real estate taxes not yet due and payable. Buyer further acknowledges that the deed shall contain a restriction stating that in the event that the Premises or any portion thereof shall be exempt from real and personal property taxes, by transfer, conversion, or otherwise, then the then-owner of the exempt portion shall make annual payments to the City in lieu of taxes in the amount of the lesser of (a) the amount of property taxes that would have been assessed on the exempt portion of the real and personal property situated on the Premises had such property remained taxable, or (b) such other target percentage as may be approved as part of a city-wide PILOT policy that may be in effect at the time taxes are due on such property. Such restriction shall also confirm that Buyer and its successors and assigns shall possess and be vested with all rights and privileges as to abatement

and appeal of valuations, rates, and the like as are accorded owners of real and personal property in Maine.

4. <u>INSPECTIONS</u>.

a. During the Due Diligence Period, Buyer and its employees, consultants, contractors and agents shall have the right, at Buyer's expense, to enter on the Premises at reasonable times in order to (i) inspect the same, (ii) conduct engineering studies, percolation tests, geotechnical exams, environmental assessments, and other such studies, tests, exams, and assessments, and (iii) do such other things as Buyer determines, it is sole discretion, to be required to determine the suitability of the Premises for Buyer's intended use (collectively, the "Inspections"). The City acknowledges that such Inspections may include the digging of test pits, which the City hereby approves.

b. Buyer agrees to defend, indemnify and hold harmless the City against any mechanics liens that may arise from the activities of Buyer and its employees, consultants, contractors and agents on the Premises, except those arising from labor or materials furnished at the City's request.

c. Buyer shall exercise the access and inspection rights granted hereunder at its sole risk and expense, and Buyer hereby releases the City from, and agrees to indemnify, defend, and hold the City harmless against, any and all losses, costs, claims, expenses and liabilities (including without limitation reasonable attorney fees and costs) (collectively, "Damages") suffered by the City on account of any injury to person or damage to property arising out of the exercise by Buyer of its rights hereunder, except to the extent that such Damages result from the act or omission of the City.

d. Buyer shall cause any contractors, consultants or any other party conducting the Inspections to procure automobile insurance, if applicable, and general public liability insurance coverage in amounts of not less than Four Hundred Thousand Dollars ($400,000.00) per occurrence for bodily injury, death and property damage, listing the City as an additional insured thereon, and also Workers' Compensation Insurance coverage to the extent required by law; the forms of all such insurance to be subject to City's Corporation Counsel's reasonable satisfaction.

e. In the event that Buyer does not purchase the Premises, Buyer agrees to either return the Premises as nearly as reasonably possible to its original condition after conducting the Inspections, or, at the City's option, reimburse the City for any material physical damage caused to the Premises in connection with the Inspections; provided, however, the City hereby acknowledges and agrees that the term "physical damage" does not include any disturbance of any pre-existing environmental contamination on the Premises caused by such inspections, nor any studies, tests (including test borings or pits), exams, and assessments, and that Buyer shall have no obligation to clean-up, remove or

take any other action with respect to any pre-existing environmental contamination disturbed thereby.

f. The parties hereto acknowledge and agree that it is a condition to Buyer's obligations under this Agreement that the results of the Inspections be acceptable to Buyer in its sole discretion. If the results of such due diligence are not acceptable to Buyer in its sole discretion Buyer may terminate this Agreement. If Buyer exercises its right to terminate this Agreement, then the City shall refund to Buyer the Deposit, if previously paid, without interest, within ten (10) days after receipt of Buyer's termination notice, and neither party shall have any further obligations or liabilities under this Agreement except as expressly set forth in this Agreement. Any termination notice sent by Buyer with respect to this Agreement may merely state that Buyer elects to terminate this Agreement, shall have no formal requirements, and shall be immediately effective.

5. <u>REAL ESTATE TAXES, PRORATIONS AND TRANSFER TAX.</u> Buyer shall be liable for all real estate taxes beginning as of the start of fiscal year following the closing and continuing thereafter. Because the Premises is currently owned by the City of Portland, which is exempt from real estate taxes, no taxes were assessed or will be due for any portion of the current fiscal year, and no taxes will be prorated at the closing. Any utilities for the Property shall be prorated as of the closing. The Buyer's one half share of Maine real estate transfer tax shall be paid for by Buyer in accordance with 36 M.R.S.A. § 4641-A. City is exempt from paying the transfer tax pursuant to 36 M.R.S.A. § 4641-C. The recording fee for the deed of conveyance and any expenses relating to Buyer's financing or closing shall be paid for by Buyer.

6. <u>DEFAULT AND REMEDIES</u>. In the event that Buyer defaults hereunder for a reason other than the default of the City, City shall retain the deposit as its sole remedy. In the event City defaults under this Agreement, and if Buyer is not then in default hereunder, Buyer shall have the right to pursue specific performance and the City agrees it shall not invoke any sovereign immunity defense nor any defense based upon its status as a City, municipality, body politic or the like, but Buyer at all times may elect in substitution therefor, as its sole remedy, the right to a return of its deposit.

7. <u>RISK OF LOSS.</u> The risk of loss or damage to the Premises by fire, eminent domain, condemnation, or otherwise, until transfer of title hereunder, is assumed by the City. The Premises is to be delivered in substantially the same condition as of the date of this Agreement unless otherwise stated. In the event City is not able to deliver the Premises as stated, Buyer may terminate this Agreement and receive a refund of the Deposit without interest, and neither party shall have any further obligations or liabilities under this Agreement except as expressly set forth in this Agreement, or Buyer may elect to close hereunder and receive an assignment of any applicable insurance proceeds payable to the City relating to such loss or damage.

8. <u>PROPERTY SOLD "AS IS, WHERE IS</u>." Buyer acknowledges that Buyer will have an opportunity to inspect the Premises, and to hire professionals to do so, and that Premises will be sold "as is, where is" and "with all faults." City, and its agents, make

no representations or warranties with respect to the accuracy of any statement as to boundaries or acreage, or as to any other matters contained in any description of the Premises, or as to the fitness of the Premises for a particular purpose, or as to development rights, merchantability, habitability, or as to any other matter, including without limitation, land use, zoning and subdivision issues (other than City's agreement to obtain subdivision approval as set forth in Paragraph 10 of this Agreement) or the environmental, mechanical, or structural condition of the Premises. Acceptance by Buyer of the Deed at closing and payment of the purchase price shall be deemed to be full performance and discharge by the City of every agreement and obligation contained herein except as expressly set forth herein.

9. <u>ENVIRONMENTAL INDEMNIFICATION</u>. Buyer covenants and agrees to indemnify, defend, and hold the City harmless from and against any and all claims, damages, losses, liabilities, obligations, settlement payments, penalties, assessments, citations, directives, claims, litigation, demands, defenses, judgments, costs, or expenses of any kind, including, without limitation, reasonable attorneys', consultants', and experts' fees incurred in investigating, defending, settling, or prosecuting any claim, litigation or proceeding, that may at any time be imposed upon, incurred by or asserted or awarded against Buyer or the City and relating directly or indirectly to the violation of or compliance with any federal, state, or local environmental laws, rules, or regulations governing the release, handling or storage of hazardous wastes or hazardous materials and affecting all or any portion of the Premises, except to the extent that such a claim results directly from the City's release, handling or storage of hazardous wastes or hazardous materials on the Premises. This duty to indemnify, defend, and hold harmless shall be included in a covenant in the deed and shall run with the land conveyed and be binding upon Buyer's successors, assigns, and transferees.

10. <u>CONDITIONS PRECEDENT TO CLOSING.</u> It is a condition precedent to Closing that:

a. The City shall obtain in form reasonably acceptable to Buyer the removal of the restrictions limiting development of or use of the Premises or otherwise burdening the Premises (hereinafter the "Deed Restrictions") stated or described in the deed to the City from the State of Maine dated September 26, 2005 and recorded in the Cumberland County Registry of Deeds in Book 23202, Page 38.

b. The City shall obtain Subdivision approval by the City of Portland Planning Board, in order to obtain approval for the creation of the parcel which constitutes the Premises, unless the City as Seller and Buyer agree, such Subdivision approval is not required (hereinafter the "Subdivision Approval").

In the event the City is unable to obtain Subdivision Approval and the removal of all the above Deed Restrictions prior to the Closing Date, as defined below, then the Buyer may either (1) extend the Closing Date set forth in Paragraph 11 by a time period not to exceed one hundred eighty (180) days to permit the removal of the Deed Restrictions and the approvals to be obtained or (2) elect to terminate this Agreement either prior to the scheduled Closing Date or prior to the expiration of any extension period based on an

extension as provided above. In the event Buyer shall elect to so extend the Closing Date, the City agrees to pursue the removal of the Deed Restrictions and Subdivision Approval.

If Buyer shall elect to terminate this Agreement then the City shall refund the Deposit, if previously paid, without interest, and this Agreement shall be terminated and neither party shall have any further obligations or liabilities under this Agreement, unless the parties mutually agree to extend this Agreement. Buyer acknowledges and agrees that the City is acting as Seller, and not in its regulatory capacity, in connection with this Agreement. The delivery to Buyer, and acceptance and recording by the Buyer of a deed to the Buyer of the Premises, will evidence conclusive and final consent by the Buyer to the waiver or completion of all these conditions.

11. CLOSING. Time is of the essence in the performance of this Agreement. The closing shall be held at the offices of Buyer's counsel at a time agreeable to the parties on or before the day that is the later of five months after the Effective Date of this Agreement or thirty (30) days after the later of (i) the expiration of the Due Diligence Period; (ii) the deadline for the City to resolve any title, Survey or environmental objections; or (iii) the date to which Buyer elects to extend the Closing Date under Paragraph 10 (the "Closing Date"). At the Closing:

a. City shall execute, acknowledge and deliver to Buyer a municipal quitclaim deed conveying to Buyer good, and insurable title (at standard rates) to the Premises, free and clear of all liens and encumbrances except as otherwise set forth herein.

b. Buyer shall deliver the balance of the Purchase Price to the City by wire transfer (or as otherwise reasonably requested by the City); and

c. Each party shall deliver to the other such other documents, certificates and the like as may be required herein or as may be necessary to carry out the obligations under this Agreement, and for the Buyer to obtain owners and lenders title insurance in form reasonably acceptable to Buyer and to Buyer's lender.

d. Buyer shall deliver evidence, reasonably satisfactory to City's Corporation Counsel, that the entity receiving title to the Premises is in good standing under Maine law, and that the individuals acting with respect to the Closing and executing documents on behalf of Buyer are authorized to do so.

12. BUYER'S POST CLOSING OBLIGATIONS; ESCROW AGREEMENT. Buyer agrees as follows:

a. Buyer agrees at Closing to deposit $115,000.00 to be held in escrow (the "Escrow Account") pursuant to an escrow agreement in form mutually acceptable to Buyer and City with a mutually acceptable escrow agent.

b. Buyer agrees to commence development of the residential project generally depicted on the plans that are attached hereto as Exhibit B and incorporated herein by reference, and which project was presented to the City's Economic Development Committee on July 19, 2017, and which shall specifically include at least twenty-three (23) new dwelling units at Buyer's property at 104 Grant Street (The "Residential Project"), within twelve (12) months after closing; provided, however, that Buyer shall be entitled to modify the Residential Project by increasing the number of residential units, modifying the size and layout of such units, or minor, non-substantive changes. Buyer shall also be entitled to modify the Residential Project in a manner deemed reasonably necessary by Buyer to obtain City Planning board, City Council or any other municipal or other necessary approval; provided, however, that such modifications shall not reduce the number of new dwelling units below 23 unless the City's land use ordinance only permits a smaller number without material modifications to the Residential Project as proposed, in which case the Residential Project shall include the maximum number of dwelling units allowed at 104 Grant Street without material modifications to the Residential Project as proposed.

c. Buyer's commencement of the Residential Project development shall be effected by Buyer or its successors, assigns, or transferees submitting a site plan review application (an "Application") for the Residential Project within 12 months after the Closing under this Agreement.

d. Buyer agrees to commence development of a commercial project at the Premises in substantially the form depicted on the plans that are attached hereto as Exhibit C and incorporated herein by reference, and which project was presented to the City's Economic Development Committee on July 19, 2017 (the "Commercial Project"), within twelve (12) months after closing. the Commercial Project shall be deemed to be "substantially in the form depicted on the plan attached as Exhibit C" if it proposes to include (or is constructed to include) a) multiple commercial tenant(s) which may be of varied types including retailers and others, b) rooftop decks, and c) if reasonably feasible within the existing space available, open spaces/common areas available for public use. The Commercial Project may also be modified in a manner deemed necessary by Buyer to obtain City Planning board, City Council or any other municipal or other necessary approval and the Commercial Project, if otherwise "substantially in the form depicted on the plan attached as Exhibit C" shall, notwithstanding any such modifications, continue to be so considered.

e. Buyer's commencement of the Commercial Project shall be effected by Buyer or its successors, assigns, or transferees submitting an Application for the Commercial Project within 12 months after the Closing under this Agreement.

f. If Buyer does not submit Applications for the Commercial Project and the Residential Project (including any modifications as described above) within one (1) year of Closing under this Agreement, then $10,000.00 shall be released

from escrow to the City's Housing Trust Fund, and until both Applications have been filed, an additional $10,000.00 shall be released from escrow to the City's Housing Trust Fund each ninety (90) days thereafter.

g. Additionally, Buyer shall commence construction of the Residential Project and the Commercial Project by the later of the date that is thirty-six (36) months after Closing under this Agreement or one hundred eighty (180) days after final approval of the Projects (including, without limitation, final decisions in all applicable municipal or judicial proceedings) and the expiration of all applicable appeal periods (the "Construction Start Date"). Buyer agrees to diligently pursue all approvals for both Projects. If Buyer fails to commence construction of the Residential Project and the Commercial Project by the later of the Construction Start Date, then $10,000.00 shall be released from escrow and to the City's Housing Trust Fund, and until construction on both Projects is commenced, an additional $10,000.00 shall be released from escrow to the City's Housing Trust Fund each ninety (90) days thereafter. Within thirty (30) days after the commencement of construction of both Projects, the remaining balance of the Escrow Account shall be released to Buyer. If no Closing takes place under this Agreement, the Buyer shall not be required to fund the Escrow Account nor make any payment. Notwithstanding anything to the contrary above, in the event that Buyer fails to commence construction of both Projects within 5 years from the Closing Date, the entire remaining balance of the Escrow Account shall be released to the City's Housing Trust Fund.

h. City hereby agrees that despite the references in this Agreement to Buyer as the developer with respect to the Residential Project and the Commercial Project, that the two projects will be undertaken by two different Limited Liability Companies ("LLCs") to be formed or corporations to be formed which will be assignees of Buyer, and the City hereby consents to the same and to Buyer's assignment of its rights and obligations under this Agreement to any such LLC's or corporations, provided that Thomas Watson will be a manager or co-manager of any such LLCs and President or Vice President of any such corporations.

i. The provisions of this section shall survive closing.

13. <u>ENTIRE AGREEMENT.</u> This Agreement represents the entire and complete Agreement and understanding between the parties and supersedes any prior agreement or understanding, written or oral, between the parties with respect to the acquisition or exchange of the Premises hereunder. This Agreement cannot be amended except by written instrument executed by City and Buyer.

14. <u>NON-WAIVER</u>. No waiver of any breach of any one or more of the conditions of this Agreement by either party shall be deemed to imply or constitute a waiver of any succeeding or other breach hereunder.

15. <u>HEADINGS AND CAPTIONS.</u> The headings and captions appearing herein are for

the convenience of reference only and shall not in any way affect the substantive provisions hereof.

16. **BINDING EFFECT**. This Agreement shall be binding upon and inure to the benefit of the parties hereto and their respective heirs, administrators, successors and assigns.

17. **TIME.** The City and Buyer each confirm and agree that each of the time periods set forth herein are essential provisions of the terms of this Agreement.

18. **GOVERNING LAW**. This Agreement shall be construed in all respects in accordance with, and governed by, the laws of the State of Maine. All parties hereto hereby consent to the exclusive jurisdiction of the Superior Court for the County of Cumberland in the State of Maine, for all actions, proceedings and litigation arising from or relating directly or indirectly to this Agreement or any of the obligations hereunder, and any dispute not otherwise resolved as provided herein shall be litigated solely in said Court. If any provision of this Agreement is determined to be invalid or unenforceable, it shall not affect the validity or enforcement of the remaining provisions hereof.

19. **NOTICE**. All notices, demands and other communications hereunder shall be in writing and shall be deemed to have been duly given on the date of service if served personally on the party to whom notice is to be given, or on the first business day after mailing if mailed to the party to whom notice is to be given by first class mail, postage prepaid, certified, return receipt requested, addressed to the recipient at the addresses set forth below. Hand delivery to the City Manager's office shall be effective as personal delivery to the City Manager on the date of delivery. Either party may change addresses for purposes of this paragraph by giving the other party notice of the new address in the manner described herein.

FOR THE City:	City of Portland ATTN: City Manager 389 Congress Street Portland, ME 04101
With a copy to:	The Office of the Corporation Counsel at the same address.
FOR Buyer:	Mr. Thomas Watson Tom Watson & Co., LLC 104 Grant Street Portland, ME 04101
With a copy to:	William H. Leete, Jr., Esq. Leete & Lemieux, P.A. 511 Congress Street, Suite 502 Portland, ME 04101

20. **SIGNATURES; MULTIPLE COUNTERPARTS.** This Agreement may be executed in any number of counterparts and by different parties in separate counterparts. Each counterpart when so executed shall be deemed to be an original and

all of which together shall constitute one and the same agreement.

21. **BROKERS.** The City shall be responsible for paying all its brokers, including CBRE | The Boulos Company, at closing. Buyer has no broker other than Joseph Porta of Porta & Co., who Buyer understands is to be compensated by CBRE | The Boulos Company. Buyer agrees to indemnify and hold harmless City from any claims made by any broker should Buyer's representation in this paragraph be false. Subject to the limitations of liability set forth in the Maine Tort Claims Act, City agrees to indemnify and hold harmless Buyer from any claims made by any broker should City's representation in this paragraph be false. The foregoing indemnities shall include all legal fees and costs incurred in defense against any such claim, and shall survive closing.

22. **RECITALS INCORPORATED BY REFERENCE**. The recitals set forth above are incorporated herein by reference and made a part of this Agreement.

IN WITNESS WHEREOF, the parties have hereunto have caused this instrument to be executed on their behalf by their duly authorized officers or representatives, as of the day and year first written above.

CITY OF PORTLAND

Sonia Bean
WITNESS

Jon P. Jennings
Its City Manager

TOM WATSON & CO., LLC

WITNESS

Printed Name: Thomas E. Watson
Its Manager

Approved as to Form:

Corporation Counsel's Office

Parcel Map

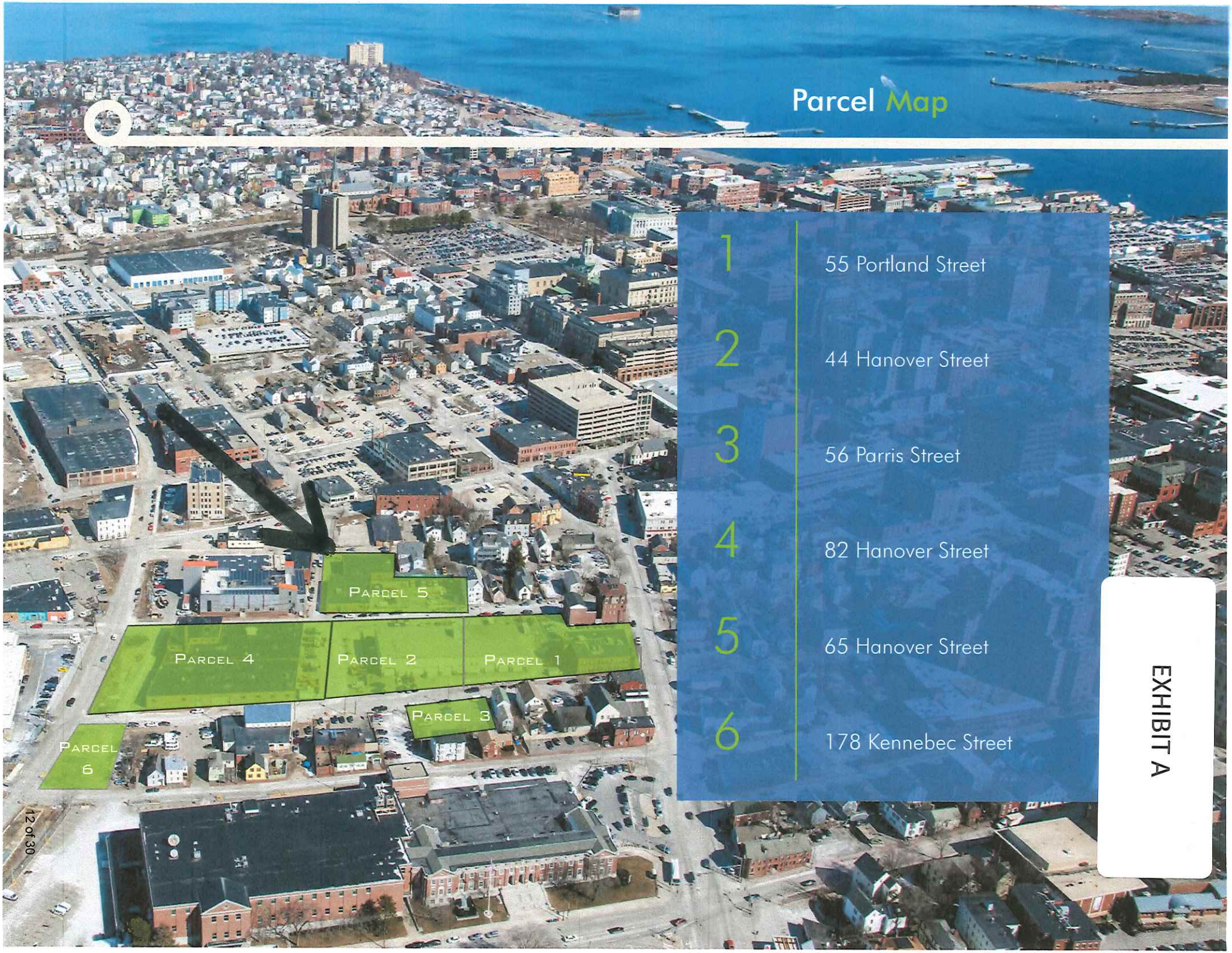

1	55 Portland Street
2	44 Hanover Street
3	56 Parris Street
4	82 Hanover Street
5	65 Hanover Street
6	178 Kennebec Street

EXHIBIT A

EXHIBIT B

BAYSIDE RFP
TOM WATSON & COMPANY
PROPOSAL FOR THE DEVELOPMENT OF A 23 UNIT APARTMENT BUILDING AT 104 GRANT STREET, PORTLAND MAINE

104 Grant St- Current Use

PORTLAND, MAINE

BAYSIDE RFP - 104 GRANT STREET

PORTLAND, MAINE

JUNE 01, 2017

1 VIEW LOOKING WEST ON GRANT STREET
N.T.S.

Port Property
MANAGEMENT

PROGRESS PRINT ONLY
Not for Construction

RYAN SENATORE **ARCHITECTURE**

BAYSIDE RFP - 104 GRANT STREET

PORTLAND, MAINE

JUNE 01, 2017

1 104 GRANT STREET - SOUTH ELEVATION
N.T.S.

Port Property
MANAGEMENT

PROGRESS PRINT ONLY
Not for Construction

RYAN SENATORE **ARCHITECTURE**

BAYSIDE RFP - 104 GRANT STREET

PORTLAND, MAINE

JUNE 01, 2017

1st Floor

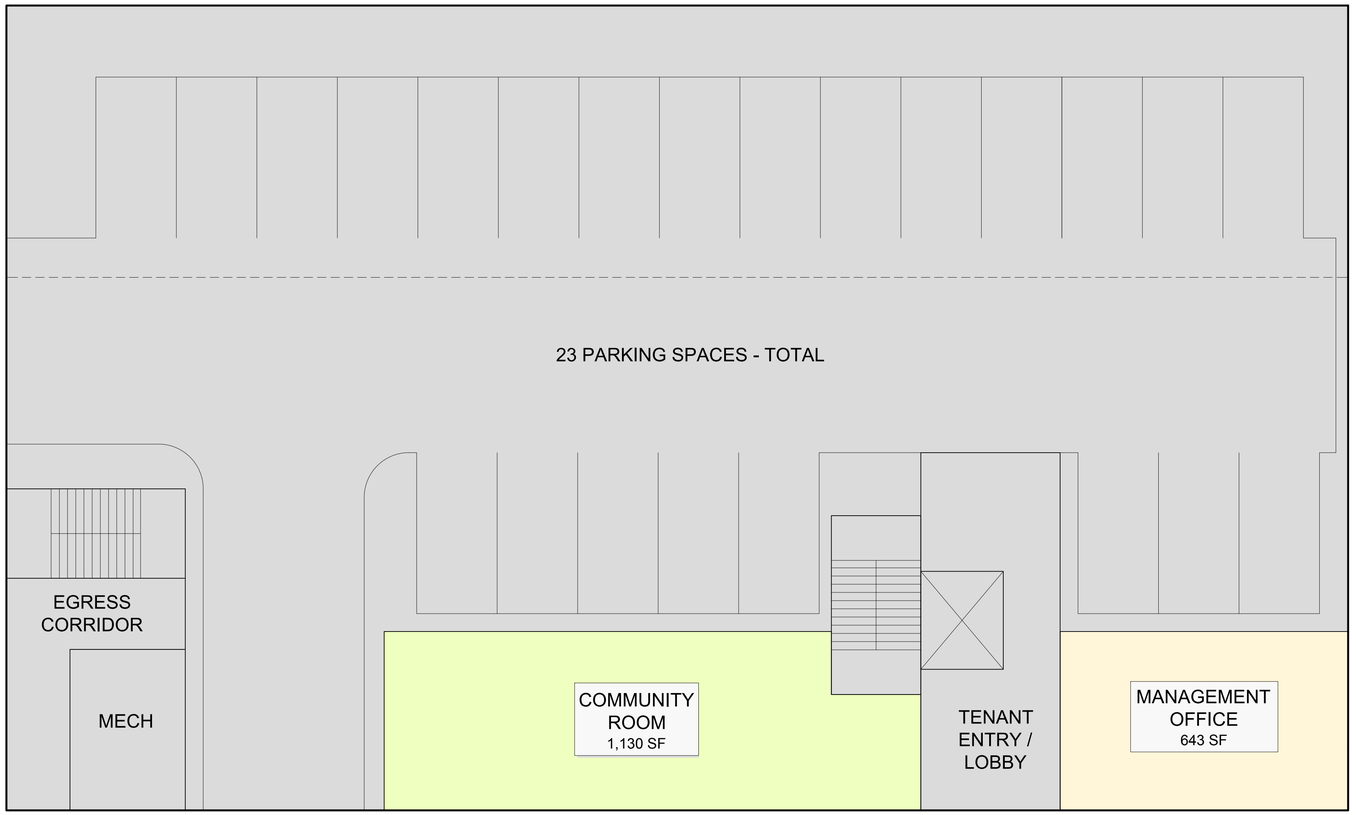

GRANT STREET

104 GRANT STREET		
BUILDING AREA		
FIRST FLOOR AREA	(13,500 SF)	
COMMUNITY ROOM		1,130 SF
MANAGEMENT OFFICE		643 SF
SECOND FLOOR AREA	(8,775 SF)	
UNIT - 1		1,228 SF
UNIT - 2		1,030 SF
UNIT - 3		815 SF
UNIT - 4		711 SF
UNIT - 5		958 SF
UNIT - 6		934 SF
UNIT - 7		990 SF
UNIT - 8		1,024 SF
SECOND FLOOR AREA	(8,775 SF)	
UNIT - 9		1,228 SF
UNIT - 10		1,030 SF
UNIT - 11		815 SF
UNIT - 12		711 SF
UNIT - 13		958 SF
UNIT - 14		934 SF
UNIT - 15		990 SF
UNIT - 16		1,024 SF
FOURTH FLOOR AREA	(8,775 SF)	
UNIT - 17		1,228 SF
UNIT - 18		1,030 SF
UNIT - 19		815 SF
UNIT - 20		1,645 SF
UNIT - 21		958 SF
UNIT - 22		1,024 SF
UNIT - 23		990 SF
	BUILDING TOTAL =	40,320 SF

NOTE:

ALL SQUARE FOOTAGES CALCULATED USING OUTSIDE FACE OF EXTERIOR WALLS AND CENTERLINE OF SHARED WALLS

TRUE NORTH / PROJECT NORTH

0 4' 8' 16' 32'

1 104 GRANT STREET - FIRST FLOOR PLAN
1/8" = 1'-0"

PROGRESS PRINT ONLY
Not for Construction

Port Property MANAGEMENT

RYAN SENATORE **ARCHITECTURE**

BAYSIDE RFP - 104 GRANT STREET

PORTLAND, MAINE

2nd Floor

JUNE 01, 2017

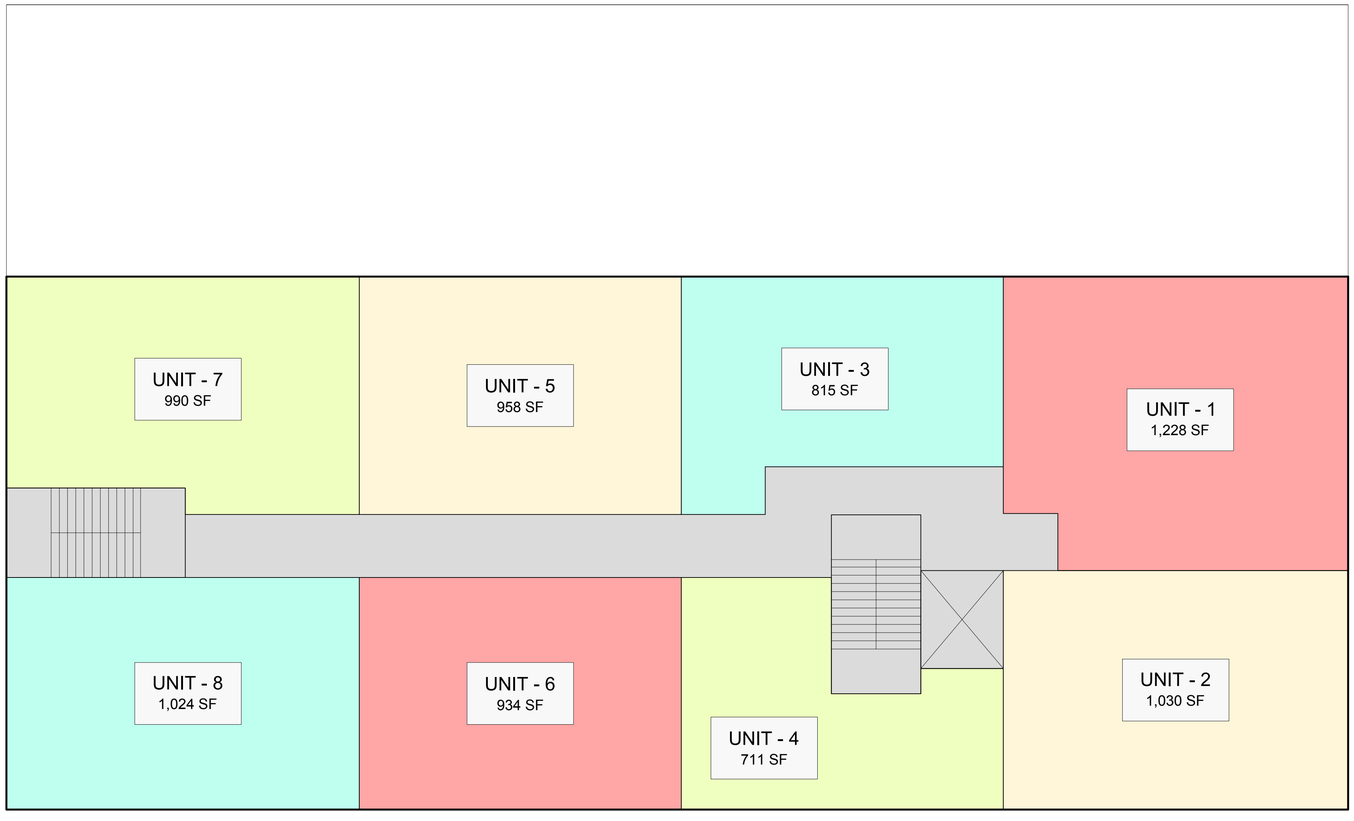

104 GRANT STREET		
BUILDING AREA		
FIRST FLOOR AREA	(13,500 SF)	
COMMUNITY ROOM		1,130 SF
MANAGEMENT OFFICE		643 SF
SECOND FLOOR AREA	(8,775 SF)	
UNIT - 1		1,228 SF
UNIT - 2		1,030 SF
UNIT - 3		815 SF
UNIT - 4		711 SF
UNIT - 5		958 SF
UNIT - 6		934 SF
UNIT - 7		990 SF
UNIT - 8		1,024 SF
SECOND FLOOR AREA	(8,775 SF)	
UNIT - 9		1,228 SF
UNIT - 10		1,030 SF
UNIT - 11		815 SF
UNIT - 12		711 SF
UNIT - 13		958 SF
UNIT - 14		934 SF
UNIT - 15		990 SF
UNIT - 16		1,024 SF
FOURTH FLOOR AREA	(8,775 SF)	
UNIT - 17		1,228 SF
UNIT - 18		1,030 SF
UNIT - 19		815 SF
UNIT - 20		1,645 SF
UNIT - 21		958 SF
UNIT - 22		1,024 SF
UNIT - 23		990 SF
	BUILDING TOTAL =	40,320 SF

NOTE:

ALL SQUARE FOOTAGES CALCULATED USING OUTSIDE FACE OF EXTERIOR WALLS AND CENTERLINE OF SHARED WALLS

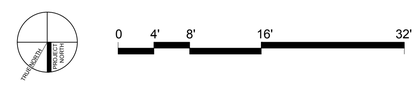

1 104 GRANT STREET - SECOND FLOOR PLAN
1/8" = 1'-0"

PROGRESS PRINT ONLY
Not for Construction

Port Property
MANAGEMENT

RYAN SENATORE **ARCHITECTURE**

BAYSIDE RFP - 104 GRANT STREET

PORTLAND, MAINE

3rd Floor

JUNE 01, 2017

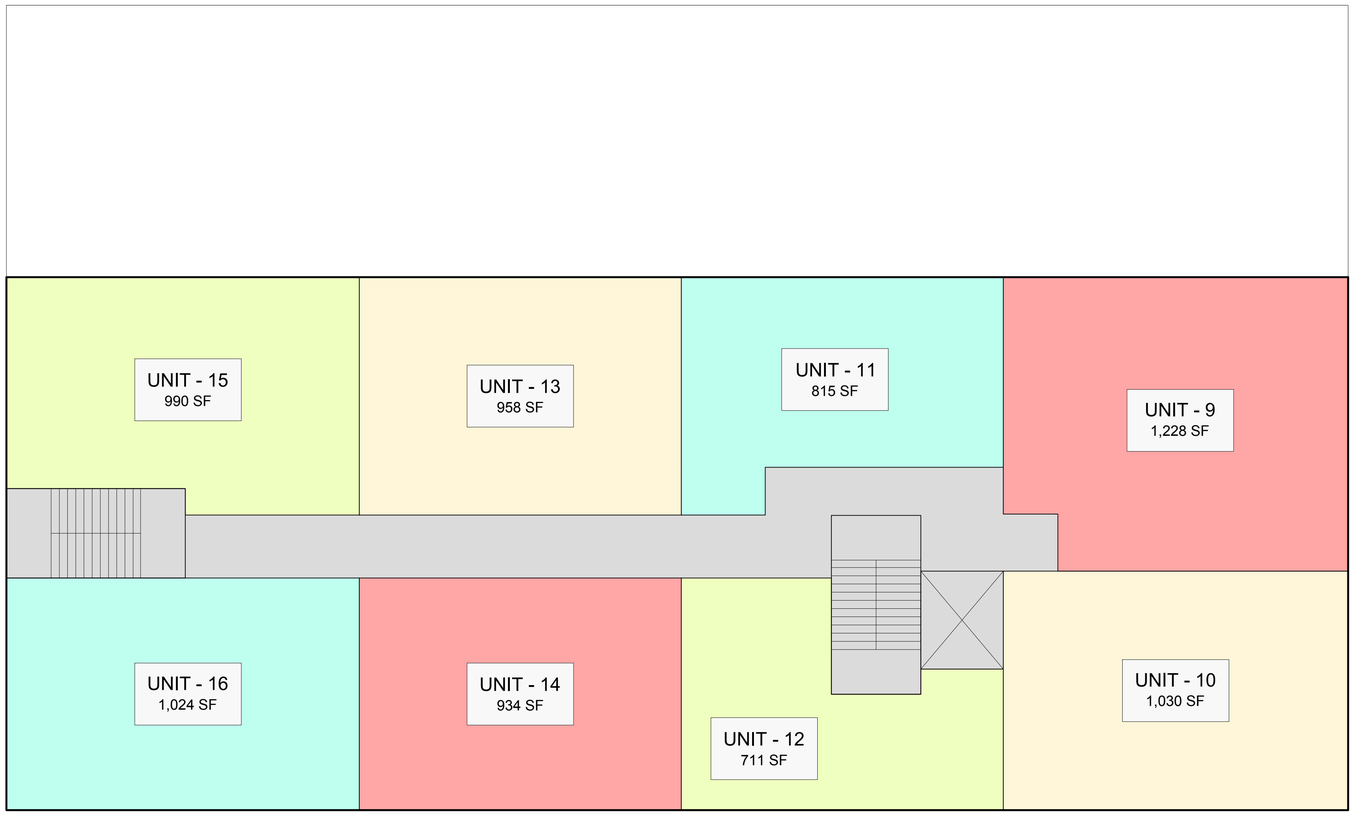

104 GRANT STREET		
BUILDING AREA		
FIRST FLOOR AREA	(13,500 SF)	
COMMUNITY ROOM		1,130 SF
MANAGEMENT OFFICE		643 SF
SECOND FLOOR AREA	(8,775 SF)	
UNIT - 1		1,228 SF
UNIT - 2		1,030 SF
UNIT - 3		815 SF
UNIT - 4		711 SF
UNIT - 5		958 SF
UNIT - 6		934 SF
UNIT - 7		990 SF
UNIT - 8		1,024 SF
SECOND FLOOR AREA	(8,775 SF)	
UNIT - 9		1,228 SF
UNIT - 10		1,030 SF
UNIT - 11		815 SF
UNIT - 12		711 SF
UNIT - 13		958 SF
UNIT - 14		934 SF
UNIT - 15		990 SF
UNIT - 16		1,024 SF
FOURTH FLOOR AREA	(8,775 SF)	
UNIT - 17		1,228 SF
UNIT - 18		1,030 SF
UNIT - 19		815 SF
UNIT - 20		1,645 SF
UNIT - 21		958 SF
UNIT - 22		1,024 SF
UNIT - 23		990 SF
	BUILDING TOTAL =	40,320 SF

NOTE:
ALL SQUARE FOOTAGES CALCULATED USING OUTSIDE FACE OF EXTERIOR WALLS AND CENTERLINE OF SHARED WALLS

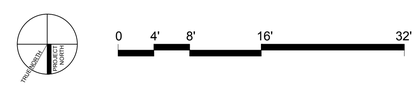

1 104 GRANT STREET - THIRD FLOOR PLAN
1/8" = 1'-0"

PROGRESS PRINT ONLY
Not for Construction

Port Property
MANAGEMENT

RYAN SENATORE **ARCHITECTURE**

BAYSIDE RFP - 104 GRANT STREET

PORTLAND, MAINE

4th Floor

JUNE 01, 2017

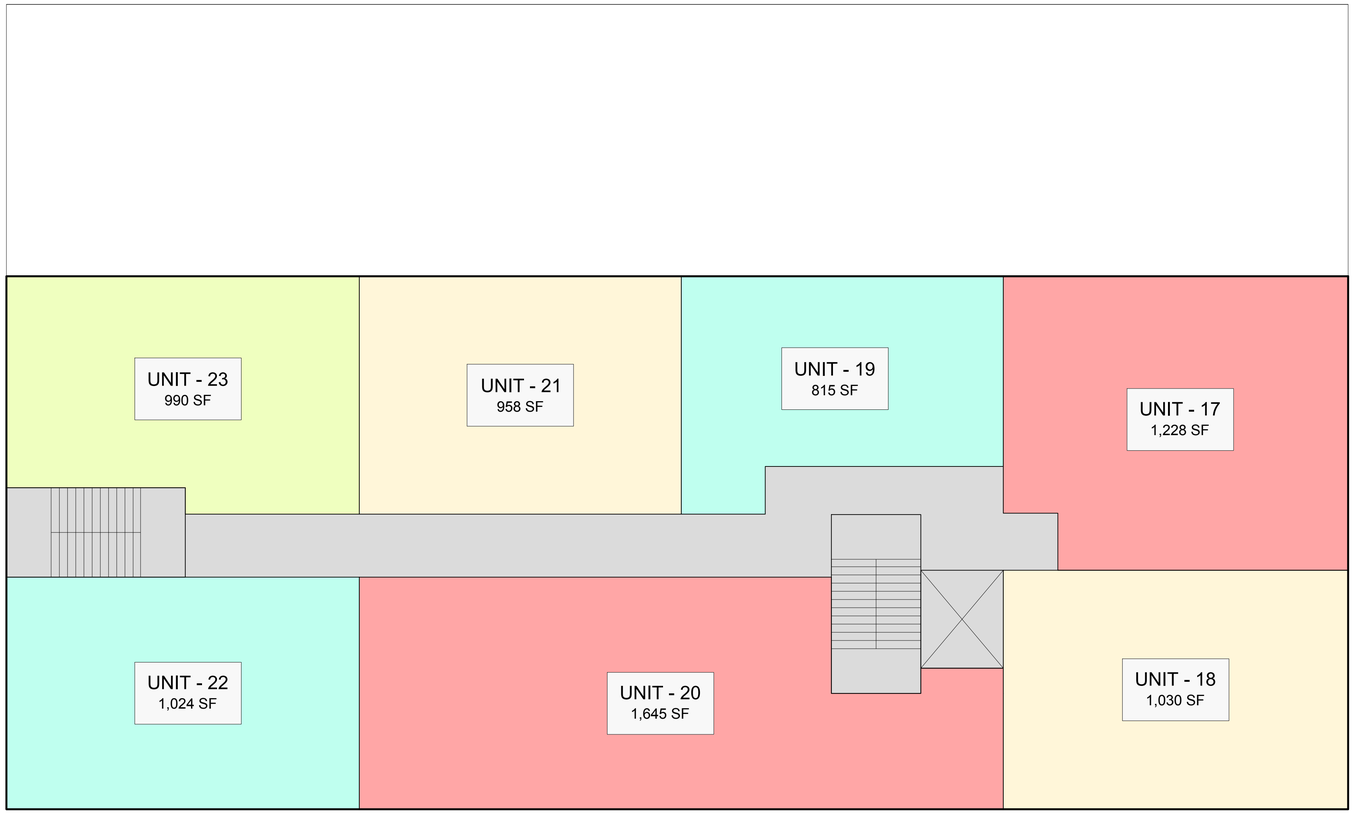

104 GRANT STREET		
BUILDING AREA		
FIRST FLOOR AREA	(13,500 SF)	
COMMUNITY ROOM		1,130 SF
MANAGEMENT OFFICE		643 SF
SECOND FLOOR AREA	(8,775 SF)	
UNIT - 1		1,228 SF
UNIT - 2		1,030 SF
UNIT - 3		815 SF
UNIT - 4		711 SF
UNIT - 5		958 SF
UNIT - 6		934 SF
UNIT - 7		990 SF
UNIT - 8		1,024 SF
SECOND FLOOR AREA	(8,775 SF)	
UNIT - 9		1,228 SF
UNIT - 10		1,030 SF
UNIT - 11		815 SF
UNIT - 12		711 SF
UNIT - 13		958 SF
UNIT - 14		934 SF
UNIT - 15		990 SF
UNIT - 16		1,024 SF
FOURTH FLOOR AREA	(8,775 SF)	
UNIT - 17		1,228 SF
UNIT - 18		1,030 SF
UNIT - 19		815 SF
UNIT - 20		1,645 SF
UNIT - 21		958 SF
UNIT - 22		1,024 SF
UNIT - 23		990 SF
	BUILDING TOTAL =	40,320 SF

NOTE:

ALL SQUARE FOOTAGES CALCULATED USING OUTSIDE FACE OF EXTERIOR WALLS AND CENTERLINE OF SHARED WALLS

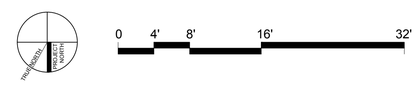

1 104 GRANT STREET - FOURTH FLOOR PLAN
1/8" = 1'-0"

PROGRESS PRINT ONLY
Not for Construction

Port Property MANAGEMENT

RYAN SENATORE **ARCHITECTURE**

EXHIBIT C

CITY OF PORTLAND BAYSIDE PROPERTIES
TOM WATSON LETTER OF INTENT TO PURCHASE

TABLE OF CONTENTS

1. LETTERS OF INTENT TO PURCHASE (IN SEPERATE PACKET):
    a. 82 HANOVER STREET
    b. 44 HANOVER STREET
    c. 56 PARRIS STREET

2. DESCRIPTION OF INTENDED USES

3. TOM WATSON BIO

4. 82 HANOVER

    a. STREET SCAPE-1
    b. STREET SCAPE-2
    c. ARCHITECT RENDERING
    d. INTENDED FLOOR PLAN LAYOUT- FIRST FLOOR
    e. INTENDED FLOOR PLAN LAYOUT (WITH ROOF TOP DECKS)- SECOND FLOOR

5. LANCASTER COURT- ARCHITECT RENDERING

6. 44 HANOVER
    a. ARCHITECT RENDERING
    b. INTENDED FLOOR PLAN LAYOUT

7. 56 PARRIS STREET
    a. ARCHITECT RENDERING OF PROPOSED 23 UNIT APARTMENT BUILDING
    b. INTENDED FLOOR PLAN LAYOUT (1 THRU 4)

8. 104 GRANT STREET
    a. PICTURE OF CURRENT USE
    b. ARCHITECT RENDERING OF 23 UNIT APARTMENT BUILDING
    c. FLOOR LAYOUTS (FLOORS 1 THRU 4)

9. 117 LOFTS: THE SCHLOTTERBECK & FOSS BUILDING (NOW A 56 UNIT APARTMENT BLDG)
    a. EXTERIOR PICTURES
    b. PICTURES OF APARTMENTS AS THEY ARE TODAY

DESCRIPTION OF INTENDED USE

82 Hanover

- Relocate Port Property Management headquarters to 82 Hanover from 104 Grant Street in Parkside
- Bring in retailers/partners who will contribute to the community as well as the economy
- Open spaces/commons available for public use
- Leverage large rooftop for decks and greenspace to add comfortable density to neighborhood
- Creates opportunity for construction of 23 units on Grant Street and eliminates an office/warehouse that sits in the middle of the Parkside residential neighborhood

44 Hanover

- 16 separate spaces all with autonomous access to the street.
- One Central Space of over 3,500SF for a public/communal user like pub, café, eatery
- Glass OHD to promote openness, and allow for artists and artisans to combine retail display space to their work space. Promote marketplace environment
- Affordable/accessible to the creative community at under $1,000/month.

Lancaster Court (between 82 Hanover & 44 Hanover)

- Commons/courtyard space open to public for public use
- Available for outdoor recreation including farmers market and small music venue for tenants and managers to promote work/events.
- Display and value public art and communal aesthetic enhancements
- Cobble stone street
- Trees/landscaping
- Fountain/water wall

56 Parris Street

- 23 2 BR 2 Bath units
- Unique product to Portland
- Create product for families (2 bathrooms) or multiple roommates (making it affordable)
- At 23 units, 4 stories high it is scaled to the other buildings in the neighborhood

Tom Watson & Company

Thomas Watson
(207) 252-0358

June 22, 2017

Thomas Watson founded Port Property Management in 1993 with his father Jack who later sold his half of the business to Russell Pierce (Tom's brother-in-law). Tom and Russ have had a successful partnership for the last 17 years and currently employ 41 full time employees, most of whom call Portland their home.

Port Property manages over 1,300 apartments and commercial spaces in Portland and South Portland, the bulk of which are on the Portland peninsula. All of the properties are owned by Port Property related companies.

Tom graduated with a B.A. from Stanford University in 1985 and received an MBA from Boston University in 1992.

He lives in Portland with his wife Judy and their 3 children, all of whom attend Portland Public Schools.

BAYSIDE RFP
TOM WATSON & COMPANY
PROPOSAL FOR THE DEVELOPMENT OF
82 HANOVER STREET, PORTLAND MAINE

82 Hanover Street- Streetscape, #1

PORTLAND, MAINE

BAYSIDE RPF-82 Hanover Street- Street Scape, #2

PORTLAND, MAINE

JUNE 16, 2017

1 VIEW LOOKING SOUTH EAST ON PARRIS STREET
N.T.S.

Port Property
MANAGEMENT

PROGRESS PRINT ONLY
Not for Construction

RYAN SENATORE **ARCHITECTURE**

BAYSIDE RFP - 82 HANOVER STREET-Rendering

PORTLAND, MAINE

MAY 11, 2017

1 VIEW LOOKING SOUTH ON HANOVER STREET
N.T.S.

Port Property
MANAGEMENT

PROGRESS PRINT ONLY
Not for Construction

RYAN SENATORE **ARCHITECTURE**

BAYSIDE RFP - 82 HANOVER STREET-First Floor

PORTLAND, MAINE

JUNE 12, 2017

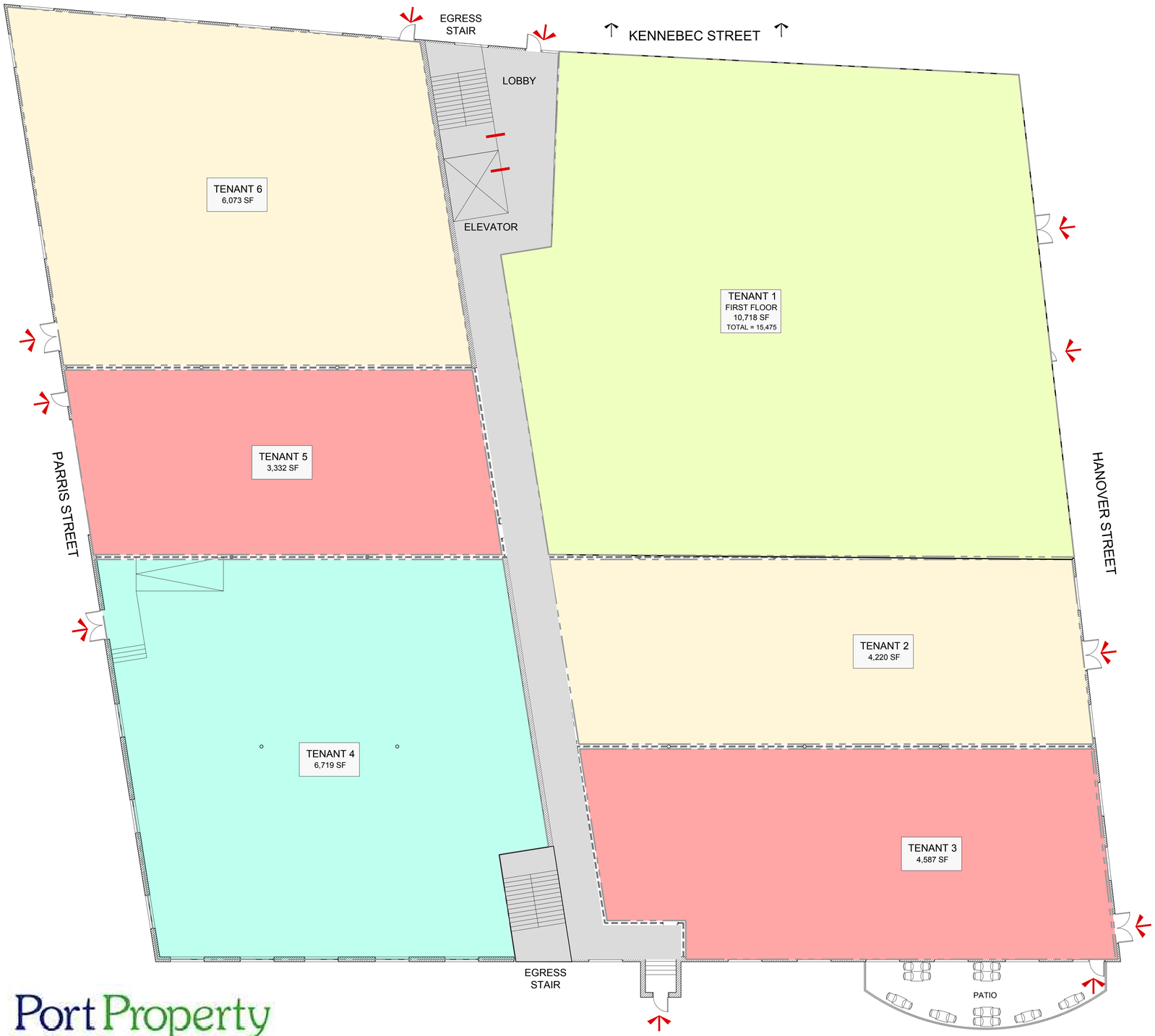

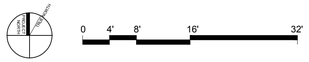

1 FIRST FLOOR CONCEPT PLAN
3/32" = 1'-0"

PROGRESS PRINT ONLY
Not for Construction

Port Property
MANAGEMENT

RYAN SENATORE **ARCHITECTURE**

BAYSIDE RFP - 82 HANOVER STREET- Second Floor

PORTLAND, MAINE

JUNE 12, 2017

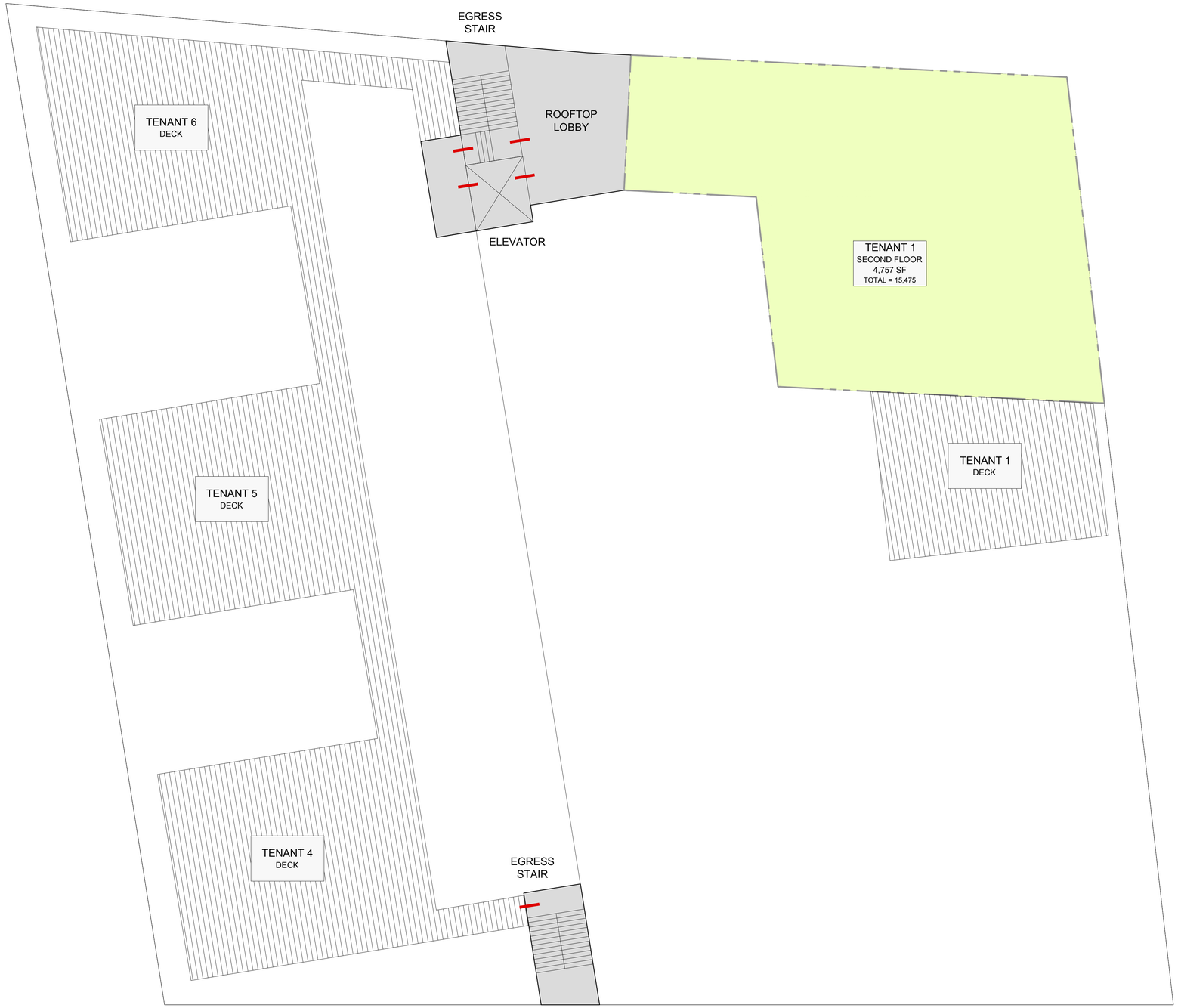

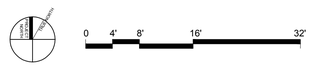

PROGRESS PRINT ONLY
Not for Construction

Port Property
MANAGEMENT

1 SECOND FLOOR CONCEPT PLAN
3/32" = 1'-0"

RYAN SENATORE **ARCHITECTURE**

BAYSIDE RFP - LANCASTER COURT

PORTLAND, MAINE

JUNE 21, 2017

1 VIEW LOOKING NORTH ON PARRIS STREET
N.T.S.

Port Property
MANAGEMENT

PROGRESS PRINT ONLY
Not for Construction

RYAN SENATORE **ARCHITECTURE**

Section E

Financial Capacity

Section E - Financial Capacity

Please find attached the status of good standing from the Secretary of State as well as a letter from the Applicant's bank.

Interactive Corporate Services

MAINE
Department of the Secretary of State
Bureau of Corporations, Elections and Commissions

Corporate Name Search

Information Summary

Subscriber activity report

This record contains information from the CEC database and is accurate as of: Fri Feb 23 2018 12:46:41. Please print or save for your records.

Legal Name	Charter Number	Filing Type	Status
TOM WATSON & CO., LLC	20062993DC	LIMITED LIABILITY COMPANY (DOMESTIC)	GOOD STANDING

Filing Date	Expiration Date	Jurisdiction
04/11/2006	N/A	MAINE

Other Names **(A=Assumed ; F=Former)**

NONE

Clerk/Registered Agent

WILLIAM H LEETE
LEETE & LEMIEUX, P.A.
P.O. BOX 7740
PORTLAND, ME 04112

Back to previous screen New Search

Click on a link to obtain additional information.

List of Filings	View list of filings	
Obtain additional information:		
Additional Addresses	Plain Copy	Certified copy
Certificate of Existence (more info)	Short Form without amendments ($30.00)	Long Form with amendments ($30.00)

You will need Adobe Acrobat version 3.0 or higher in order to view PDF files.
If you encounter problems, visit the troubleshooting page.

Get Acrobat Reader

If you encounter technical difficulties while using these services, please contact the Webmaster. If you are unable to find the information you need through the resources provided on this web site,

please contact the Bureau's Reporting and Information Section at 207-624-7752 or e-mail or visit our Feedback page.

© Department of the Secretary of State

TD Bank
America's Most Convenient Bank®
One Portland Square
P.O. Box 9540
Portland, ME 04112-9540
T 207 761 8600
F 207 761 8660

tdbank.com

February 27, 2018

City of Portland, Planning Division
389 Congress Street, 4th Floor
Portland, ME 04101

RE: 82 Hanover Project

To whom it may concern,

Tom Watson and his affiliates are well known to TD Bank, N.A.. I have worked with Tom Watson for nearly 10 years and have been directly involved in the financing of numerous successful projects. The Bank is interested in entertaining financing for Tom Watson who has the financial capacity to successfully complete the proposed project. We are looking forward to more substantive conversations as this project materializes.

Please feel free to contact me should you need any additional information. I can be reached at (207) 828-7050.

Sincerely,

Andrew Pease
Vice President
TD Bank, N.A.

Section F

Construction Management Plan

Section F - Construction Management Plan

Project Address: 82 Hanover Street

Project Description:

The proposed project includes the renovation of a 2-story garage/office into a mixed-use building. Site improvements will include parking lot reconstruction, landscaping, and utility upgrades.

Project Team Summary:

Owner:	Tom Watson & Co., LLC
General Contractor:	TBD
Civil Engineer:	Acorn Engineering, Inc.
Architect:	Ryan Senatore Architecture

The Owner/GC and all subcontractors will work with the City of Portland and adjacent landowners to minimize any project impacts.

The GC will remain responsible for enforcement of all compliance with 1) all contract plans and specifications in their scope of work and 2) all site working conditions and safety requirements, day and night, for both persons and property, in each case for the duration of their work. These include OSHA, NIOSH, U.S. EPA, local ordinance and any other applicable governmental regulations. Both the Owner/GC and any subcontractors will remain responsible for safeguarding the general public.

The GC shall review all permits and conditions associated with the project. Refer to the Civil/Site Plan Set, Sheet C-03 Construction Management Plan for visual representation of the measures to be taken during construction.

The following outline has been developed in accordance with the City of Portland Construction Management Plan General Template and shall be referenced by the GC during construction.

A. Construction Management Principles

The control of noise, vibrations, ground movement, truck traffic, and other construction related factors will be of utmost importance. Care shall be taken to minimize these effects in the best interest of neighbors and the general public. GC to ensure that work hours conform to the City of Portland's Ordinance.

B. Development Review of Construction Management Plan

Logistics and safety program shall be submitted at or prior to the preconstruction meeting by the GC with all pertinent information required by the Maine Department of Transportation's Traffic Control Plan Standard Specification 652.3.3.

C. Performance Guarantees, Inspection Fees, Preconstruction Meeting, and Permits

Guarantees and fees will be paid at the time of the respective application. Sections 14-530 and 13-532 will be complied with all necessary permits will be obtained prior to work.

1. Street Opening and Street Occupancy Permits:

   Required permits regarding street opening and occupancy will be obtained from the Department of Public Works. The requests shall conform to the approved Construction Management Plan.

2. Blasting:

   Although not anticipated, if blasting occurs, it shall conform to Article VIII. In Chapter 14 of the City Code and Section 3.7 in the City's Technical Manual.

3. Building Code:

   Employ the best practices, as applicable, of Chapter 33 Safeguards During Construction, from the 2009 International Building Code.

D. Construction Administration and Communication

The Contractor will work closely with adjacent abutters, businesses, and all parties informed, as far in advance as possible, of scheduled work, particularly work anticipated to cause significant noise, vibrations, or dust. Communication in order to comply with all agreements, ordinances, and special permits will be of the utmost importance. Contractor and Subcontractor contact information shall be posted somewhere along the project's street frontage. Additional signage necessary for communication shall be provided, but will be temporary and removed upon completion of the project.

E. Construction Schedule

The GC shall submit a construction timeline at or prior to the preconstruction meeting. Construction may occur during the daytime hours as defined in Section 17-18. Construction Activities for Building permit and City Code Section 25-129, Noise, dust and debris. Between September 1 and May 31, the following year, no person shall engage in construction activities generating noise exceeding 50 decibels, between the hours of 7 pm and 7 am of the following day within 500 feet of any buildings. From June 1 to August 31, construction activity may continue until 8 pm. No construction activity shall begin before 8 am on a Saturday, Sunday, or legal holiday. Extended hours or night work may be requested for special circumstances and street utility work if needed. These requests will be subject to approval by the Public Works Authority. Deliveries will be scheduled between 7 am and 5 pm.

The estimated timeframe of the proposed project is outlined below:

Project Start Date:	Summer 2018
Project End Date:	Fall 2018

A more detailed work schedule shall be provided by the GC at or before the pre-construction meeting with the City.

It is anticipated that the work at 82 Hanover will preclude the City's Kennebec Street Corridor Improvements. The Contractor should coordinate with the City and Designer on scheduling and design parameters. Refer to Sheet C-03, Construction Management & Erosion Control Plan on interim methods including, but not limited to curbing, gravel backfill, and stormwater stubbing.

F. Security

1. The Construction Management Plan, Sheet C-03, depicts all proposed fencing and other barriers, with the intent of separating pedestrian and vehicle circulation from the construction site. Construction entrances per detail shall be installed.

2. Structures undergoing construction, alteration, or demolition operations, including those in underground locations, shall comply with NFPA 1 Chapter 16. *Safeguarding Construction, Alteration, and Demolition Operations.*

3. Fire Safety Program: Prior to construction, an overall construction and demolition fire safety program shall be developed. Essential items to be emphasized include the following:
    - Good Housekeeping
    - On-site security
    - Installation of new fire protection systems as construction progresses
    - Preservation of existing systems during demolition
    - Organization and training of an on-site fire brigade
    - Development of a pre-fire plan with the local fire department
    - Rapid communication
    - Consideration of special hazards resulting from previous occupancies
    - Protection of existing structures and equipment from exposure fires resulting from construction, alteration, and demolition operations.

4. Blasting, if required, shall conform with all measures of Article VIII. Regulation of Explosives in the Land Use Code and Section 3.7 Standards for Blasting and Regulation of Explosives in Portland's Technical Manual.

5. Temporary security lighting shall be shown on the Construction Management Plan, and all fixtures shall be full cutoffs.

G. Construction Permitting and Traffic Control Plans

1. Construction Activity in Public Streets

   Construction activity in the public right-of-way shall be compliant with Chapter 25 Article VII of the City Code. At no time will it be permissible for construction activity including delivery vehicle to close or block streets or affect public safety access without prior notice and approval of the Department of Public Works.

2. Sewer and Stormwater

   Sewer and stormwater system connections are controlled by Chapters 24 and 32 of the City code of Ordinance. Required permits for new connections and/or abandonment of existing connections are available through the Street Opening Clerk at the Department of Public Works. Rules and Regulations for these utility systems are available through the City Engineer's office of the Department of Public Works and in Section II of the Technical Manual.

3. Traffic Control Plans

   Construction activity that impacts the existing public street system must be controlled to protect the safety of the construction workers and all modes of the traveling public. The contractor shall submit a satisfactory "Maintenance of Traffic" (MOT) plan prior to any street opening permit approval. This document shall contain all pertinent information from the Maine Department of Transportation's Traffic Control Plan Standard Specification 652.3.3.

   The MOT will address the work required for utility connections in Hanover, Kennebec, and Parris Street. Traffic will be channelized utilizing drums and cones. Proper signage will be installed prior to the through work zone. Alternating traffic will be controlled with flaggers. Trenches will be patched with pavement daily.

   The MOT plan shall provide for the safe passage of the public through or along the construction work zone. It may be permissible to close a portion of Hanover, Kennebec, or Parris Street during utility connections and/or detour a mode of traffic when absolutely necessary for safety. All requests shall be subject to City approval. MOT plans shall employ the appropriate techniques and devices as called for in the latest edition of the Manual on Uniform Traffic Control Devices (MUTCD). In addition:

   - Construction speed signing may be used as needed to slow traffic.
   - Traffic Control signs shall not be placed where they would create any obstructions to bicycles or pedestrians.
   - Flaggers will be utilized when necessary.

   All existing modes of travel in the work zone area shall be accommodated if impacted by the activity. The safe passage of pedestrians, bicyclists, transit providers, and motorists are of equal importance when planning and laying out the work zone; no pre-existing travel mode may be eliminated without the

express approval of the Department of Public Works. The MOT should also address on-street parking impacts, including deliveries and parking for adjoining businesses and property owners, analysis of roadway capacity or diversion capacity if street closure or change to roadway capacity is required, and coordination with other on-going or future construction or utility projects in the vicinity.

- Traffic control bicycle and pedestrian facilities or routes through work zones shall be maintained until the bicycle and pedestrian facilities or routes are ready for safe operation. Traffic control will not be removed to allow auto travel at the expense of bicycle and pedestrians.
- Barrier systems utilized to separate the construction activity from the public street and /or sidewalk shall not inhibit sight distances, particularly for visibility of pedestrians and bicyclists.
- ADA compliance in all capacities shall be maintained.

Use of public parking spaces or the blockage of any portion of sidewalk for the purpose of construction activity shall require an occupancy permit and appropriate fee as assessed by the Department of Public Works.

H. Site Management and Controls

1. Regular trash and debris shall be managed appropriately, and its removal shall comply with all local, state, and federal regulations.

2. Street cleaning and sweeping shall be followed as outlined in the erosion and sedimentation control notes and report. Damage to the street shall be avoided and shall be the responsibility of the contractor.

3. Dust shall be controlled and shall comply with Section 25-129 and the erosion and sedimentation control notes, plan, and details.

4. Noise shall be controlled and shall comply with Section 17-18 and Section 25-129.

5. Rodent Control shall be provided, if applicable, by a professional exterminator and shall be consistent with Chapter 22 of the City Code.

6. Snow and Ice Removal shall be provided. Pursuant to Section 25-173, the Contractor shall ensure a safe means of travel within the work zone by the following steps:

    a. Snow/ice removal or commence automatically from 1" or greater of snow or ice
    b. Remove snow as needed within the work zone, including parking spaces. Driveways and site lines shall not be blocked by piles of snow.
    c. Clear all walks and ramps within the work zone
    d. Sand or salt as needed
    e. Clear all basin or drainage to help snow melt

f. The above steps shall be carried out Sunday-Saturday including holidays.

I. Erosion & Sedimentation Control

1. The Contractor shall install all erosion and sedimentation controls as depicted on the approved Construction Management Plan, C-03, and the approved erosion and sedimentation control report, prior to the pre-construction meeting for inspection by the City. The Contractor shall regularly inspect the control measures, no less than weekly and after storm events (0.5" or more in 24 hours). Additionally, temporary or permanent stormwater management systems shall be inspected and maintained to ensure working order. The Contractor shall document all inspection activities and corrective actions and be prepared to provide these documents for inspection by the City, Maine Department of Environmental Protection (MDEP) or the U.S. Environmental Protection Agency (EPA) upon request.

2. Due to the existing, sparse landscaping on site, no protection during construction will be necessary.

3. Stored materials shall be identified and avoid being located under/near trees.

J. Construction Staging Area

1. The Contractor shall submit a plan with locations depicted for the location of material staging areas, the location of on-site temporary construction trailers, the location of on-site truck delivery holding areas, the location of on-site truck washing stations, masonry mixing stations, the general location of the construction security fence and the general location of temporary construction dumpsters. This plan shall be submitted at or prior to the pre-construction meeting. Any open storage areas shall be shown on the plan.

2. Delivery Truck Holding Areas On-Site: The majority of materials delivered to the site will be scheduled such that they are able to be off-loaded immediately. On days when the construction activities require multiple truck deliveries, these deliveries will be carefully scheduled so that there is always adequate on-site area for the holding of trucks until they can be unloaded. Once at the site all vehicles will be brought within the fence line and will make every attempt to avoid queuing on public streets. If, for any reason, on-site holding of trucks is not feasible, an off-site location must be designated and shown on the submitted plan referenced above in J.1.

3. All deliveries for materials shall comply with the City's noise requirements.

K. Parking During Construction

1. Adequate parking for construction workers shall be provided on-site during construction. On-street parking is not anticipated.

2. Truck Routes and Volumes: The following quantities are estimated as part of the reconstruction:

    - Gravel & Stone – 250 CY. Earthwork subcontractor(s) pit to project site.
    - Hot Mix Asphalt – 300 Tons. Paving subcontractor pit to project site.

L. Special Measures as Necessary

No special measures are necessary for the proposed reconstruction.

Section G

Stormwater Management Plan

G. STORMWATER MANAGEMENT REPORT

Prepared For:

Tom Watson & Co., LLC
Portland, Maine 04101

Prepared By:

Acorn Engineering, Inc.
PO Box 3372
Portland, Maine 04104

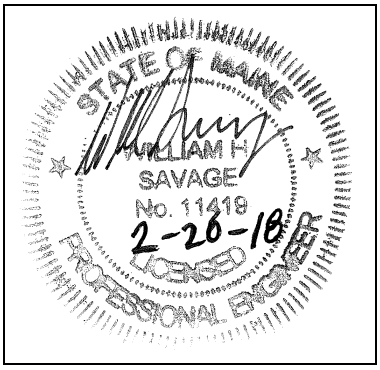

February 2018

INTRODUCTION

Acorn Engineering, Inc. has been retained by Tom Watson & Co., LLC to provide civil engineering services for the proposed redevelopment of 82 Hanover Street. The proposed project includes the renovation of the existing building with associated utility upgrades and site/landscaping improvements.

A stormwater analysis was prepared to demonstrate that the project will meet the following requirements of the City of Portland (the City):

- City of Portland Land Use Ordinance Chapter 14, Article V. Site Plan Section 14-523. Required Approvals and Applicability (F) Level III Site Plan Review.
- City of Portland Technical Manual – Section 5 – Portland Stormwater Management Standards and Maine DEP Chapter 500 Stormwater Management.

The property consists of approximately 1.3 acres of land in Portland's Bayside neighborhood. The site is currently comprised of entirely impervious area. The proposed project will decrease the impervious area by approximately 600 SF.

EXISTING CONDITIONS

The proposed project site is located on Hanover Street. A boundary plan has been prepared by Titcomb Associates of Falmouth, Maine Dated January 25, 2018.

The property is in the B-7 Urban Commercial Business Zone. Abutting Uses include:

- North B-7 – Urban Commercial Business
- West B-7 – Urban Commercial Business
- South B-2b – Business Community
- East B-7 – Urban Commercial Business

The existing property is covered by 100% impervious surfaces including one structure, pavement, gravel, and concrete. The existing gravel/pavement area is relatively flat; however, the majority of the site slopes upgradient to the south at 3 – 6%.

The project team is not aware of the presence of any existing significant natural features located on the site. Given the urban setting and existing impervious surfaces, a field inventory of significant natural features was not undertaken. The project is not located within a watershed classified as an Urban Impaired Stream.

PROPOSED DEVELOPMENT

The proposed development is a two-story office building with an accompanying parking lot in the front of the building and a patio area to the rear. Pedestrian access to the site shall be provided off all three adjacent streets. The development will be served by Portland Water

District, Department of Public Works (sewer/storm), Unitil (natural gas), CMP (electric), Charter (cable), and Fairpoint (telephone).

The proposed project will decrease the site's impervious area by approximately 600 square-feet. Additionally, the amount of redeveloped non-roof area will not exceed 5,000 square feet. The majority of the parking lot improvements will be classified as a maintenance activity defined by the Maine Department of Environmental Protection – "an activity undertaken to maintain operating condition, original line and grade, hydraulic capacity, and original purpose of the project. Paving an_impervious gravel surface at original line, grade and hydraulic capacity is considered maintenance. Replacement of a building is not considered maintenance of the building". Based on this definition, the amount of "redeveloped" impervious area will be minimal and will not trigger the City's water quality requirement.

Since the project will not meet either threshold for water quality, the project has not been designed to meet Chapter 500 General Standards. However, the implementation of two catch basins on site with hoods and three-foot sumps will improve the quality of the stormwater that enters the City's system. Additionally, the increase in pervious area through landscaping will improve the site's ability to retain water on site, reducing the overall runoff from the site.

SOILS

Onsite soil information includes the following:

- Soil Conservation Service Medium Intensity Soil Survey for Cumberland County
- United States Department of Agriculture Web Soil Survey

Given the soils information, listed above, no onsite wastewater is proposed; the applicant does not intend to perform a more intense hydric soil boundary delineation because the waiver requirements set forth in the City of Portland Technical Manual – Section 7 – Soil Survey, Rev. 6/17/11 are met.

The area within and surrounding the project includes soil types listed in the table below. The susceptibility of soils to erosion is indicated on a relative "K" scale of values over a range of 0.02 to 0.69. Higher "K" values indicate more erodible soils.

Table 1 - "K" Value		
Soils Type	**Subsurface**	**Substratum**
Au Gres Loamy Sand	.15	.15

The soil "K" value for the soil, listed above, shows a low susceptibility to erosion. The site's susceptibility to erosion is from the Soil Conservation Service Medium Intensity Soil Survey for Cumberland County. Although the soil "K" value shows a low susceptibility to erosion, implementation of the proposed Erosion & Sedimentation Measures by the contractor will be of the utmost importance given the sustained slope throughout the site.

Conclusion

The proposed development was designed to meet the requirements implemented by the MDEP under the Stormwater Management Statute (38 M.R.S.A. § 420-D) as well as the City of Portland Technical Manual – Section 5 – Portland Stormwater Management Standards. The proposed project as designed is not anticipated to cause flooding or erosion problems within the subject site, abutters' sites, nor within the right-of-way.

Attachments

Attachment A: Soils Map
Attachment B: Pre-Construction Watershed Map
Attachment C: Post-Construction Watershed Map

THIS PLAN SHALL NOT BE MODIFIED WITHOUT WRITTEN PERMISSION FROM ACORN ENGINEERING, INC. ANY ALTERATIONS, AUTHORIZED OR OTHERWISE, SHALL BE AT THE USER'S SOLE RISK AND WITHOUT LIABILITY TO ACORN ENGINEERING, INC.

DRAWING NO.
SOILS

FILE:	CIVIL
DATE:	2/26/18
JN:	1093
SCALE:	NTS
DESIGN BY:	WHS
DRAWN BY:	ADG
CHECKED BY:	WHS

ACORN ENGINEERING, INC
ACORN ENGINEERING, INC. P.O. BOX 3372
PORTLAND, MAINE 04104 (207) 775-2655

DRAWING NAME:
SOILS MAP

PROJECT NAME:
82 HANOVER STREET

CLIENT:
TOM WATSON & CO., LLC

ISSUED FOR	BY DATE
CITY APP.	WHS 2/26/18

REV. DATE

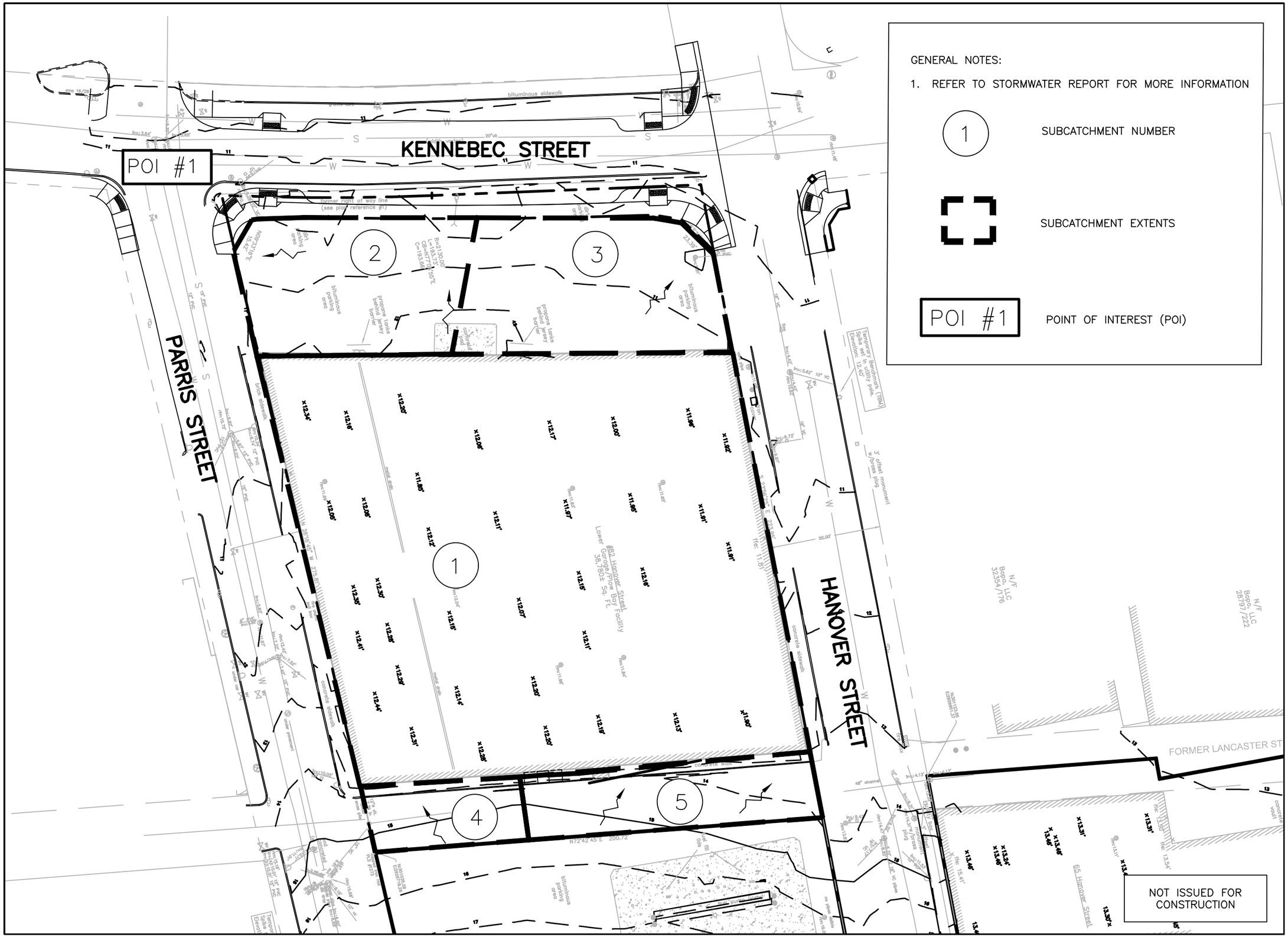

GENERAL NOTES:

1. REFER TO STORMWATER REPORT FOR MORE INFORMATION

(1) SUBCATCHMENT NUMBER

SUBCATCHMENT EXTENTS

POI #1 POINT OF INTEREST (POI)

ISSUED FOR	BY / DATE
CITY APP.	WHS 2/26/18

REVISION	REV. DATE

DRAWING NAME: PRE-DEVELOPMENT WATERSHED MAP

PROJECT NAME: 82 HANOVER STREET

CLIENT: TOM WATSON & CO., LLC
PORTLAND, ME

ACORN ENGINEERING, INC

158 DANFORTH ST
PORTLAND, MAINE 04104
(207) 775-2655

FILE:	1093_CIVIL
JN:	1093
SCALE:	1"=40'
DESIGN BY:	ADG
DRAWN BY:	ADG
CHECKED BY:	WHS

THIS PLAN SHALL NOT BE MODIFIED WITHOUT WRITTEN PERMISSION FROM ACORN ENGINEERING, INC. ANY ALTERATIONS, AUTHORIZED OR OTHERWISE, SHALL BE AT THE USER'S SOLE RISK AND WITHOUT LIABILITY TO ACORN ENGINEERING, INC.

DRAWING NO.
PRE

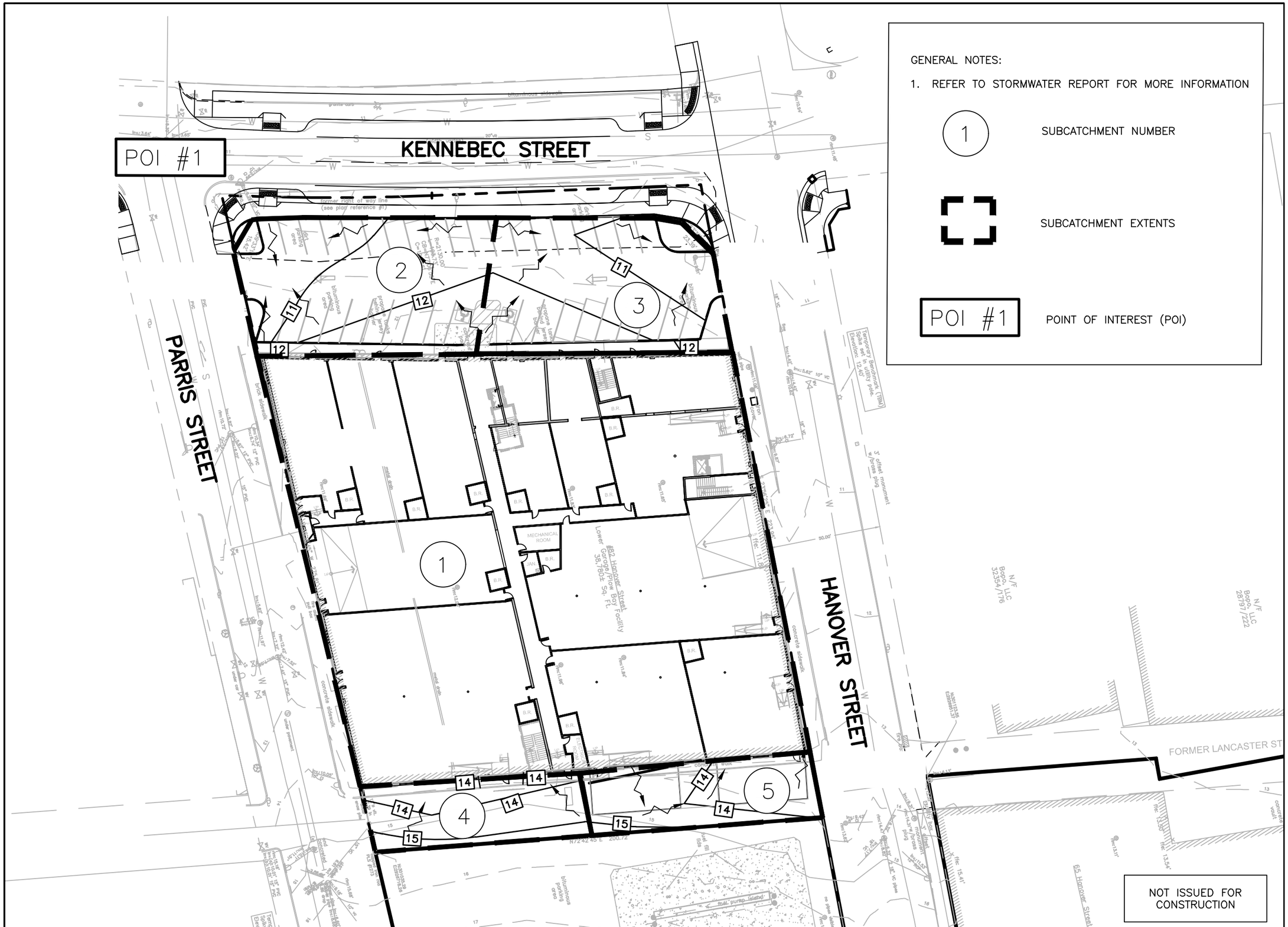

GENERAL NOTES:

1. REFER TO STORMWATER REPORT FOR MORE INFORMATION

(1) SUBCATCHMENT NUMBER

SUBCATCHMENT EXTENTS

POI #1 POINT OF INTEREST (POI)

NOT ISSUED FOR CONSTRUCTION

ISSUED FOR	BY / DATE
CITY APP.	WHS 2/26/18

REVISION	REV. DATE

DRAWING NAME: POST-DEVELOPMENT WATERSHED MAP

PROJECT NAME: 82 HANOVER STREET

CLIENT: TOM WATSON & CO., LLC
PORTLAND, ME

ACORN ENGINEERING, INC
158 DANFORTH ST
PORTLAND, MAINE 04104
(207) 775-2655

FILE:	1093_CIVIL
JN:	1093
SCALE:	1"=40'
DESIGN BY:	ADG
DRAWN BY:	ADG
CHECKED BY:	WHS

THIS PLAN SHALL NOT BE MODIFIED WITHOUT WRITTEN PERMISSION FROM ACORN ENGINEERING, INC. ANY ALTERATIONS, AUTHORIZED OR OTHERWISE, SHALL BE AT THE USER'S SOLE RISK AND WITHOUT LIABILITY TO ACORN ENGINEERING, INC.

DRAWING NO.
POST

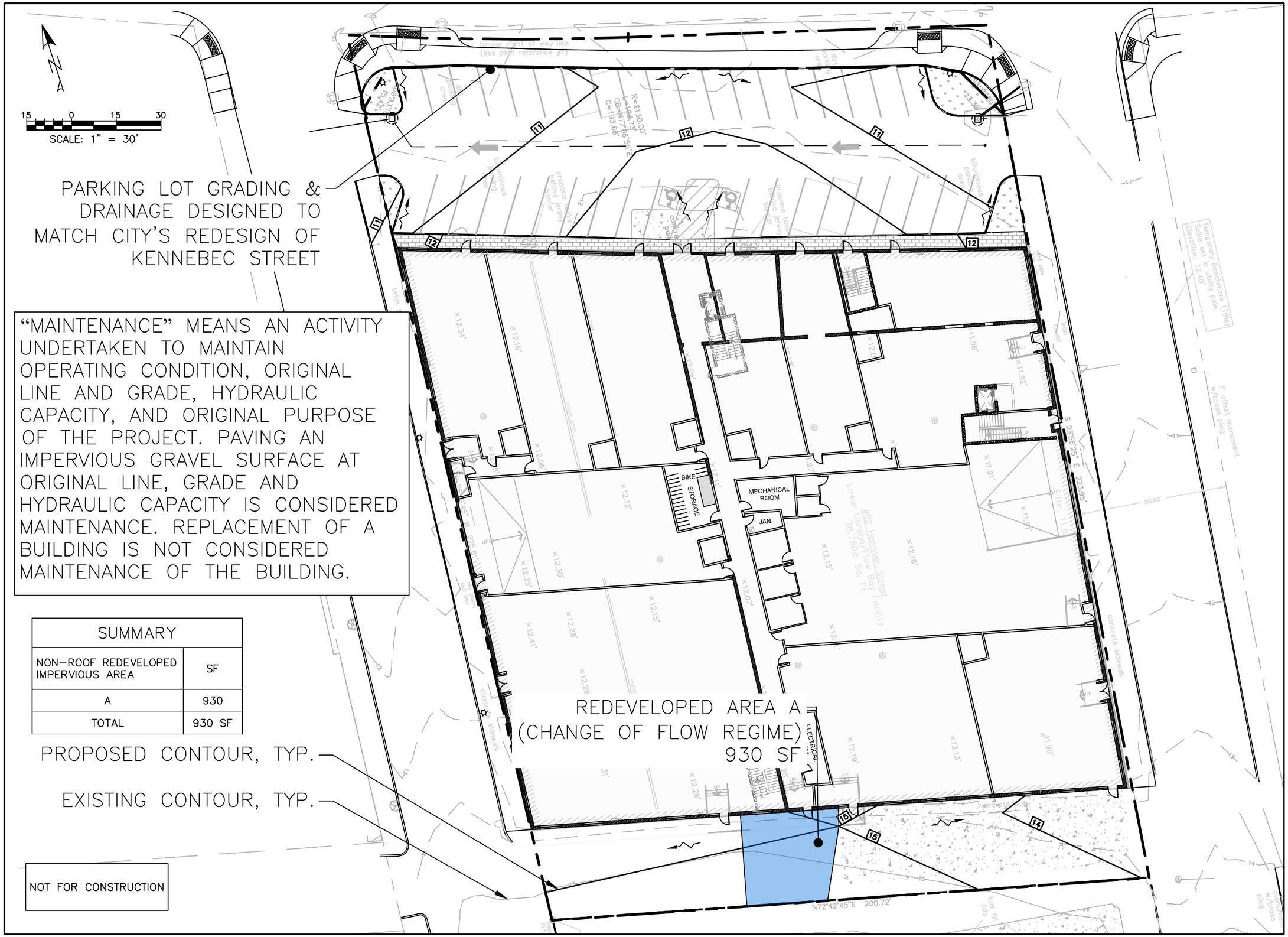

SUMMARY	
NON-ROOF REDEVELOPED IMPERVIOUS AREA	SF
A	930
TOTAL	930 SF

NOT FOR CONSTRUCTION

ISSUED FOR	BY DATE
COMMENT RESPONSE	WHS 4/9/18

REVISION	REV. DATE

DRAWING NAME: DRAINAGE EXHIBIT

PROJECT NAME: 82 HANOVER REDEVELOPMENT

CLIENT: TOM WATSON & CO.
PORTLAND, ME

ACORN ENGINEERING, INC
158 DANFORTH ST
PORTLAND, MAINE 04104
(207) 775-2655

FILE:	1093_CIVIL
JN:	1093
SCALE:	1'=30"
DESIGN BY:	SJL
DRAWN BY:	SJL
CHECKED BY:	WHS

THIS PLAN SHALL NOT BE MODIFIED WITHOUT WRITTEN PERMISSION FROM ACORN ENGINEERING, INC. ANY ALTERATIONS, AUTHORIZED OR OTHERWISE, SHALL BE AT THE USER'S SOLE RISK AND WITHOUT LIABILITY TO ACORN ENGINEERING, INC.

DRAWING NO.
EXHIBIT

Section H

Erosion & Sedimentation Control Report

EROSION & SEDIMENTATION CONTROL REPORT

Prepared For:

Tom Watson & Co., LLC
188 State Street, 3rd Floor
Portland, Maine 04101

Prepared By:

Acorn Engineering, Inc.
158 Danforth Street
Portland, Maine 04102

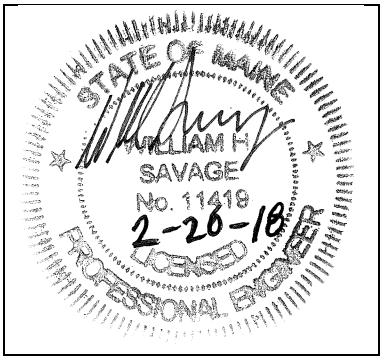

February 2018

INTRODUCTION

Acorn Engineering, Inc. has been retained by Tom Watson & Co., LLC to provide civil engineering services for the proposed mixed-use retail, restaurant, and office building at 82 Hanover Street. The proposed project includes renovating the interior of the existing auto service/office building in a multitude of businesses including restaurants, retailers, and offices.

The following Erosion and Sedimentation Control Report was developed in accordance with the City of Portland Technical Manual – Section 5 – Portland Stormwater Management Standards and the Maine DEP Chapter 500 Stormwater Management Appendix A and B (1), Amended August 12, 2015. This narrative also meets the standards required in the Maine DEP's Erosion & Sediment Control BMP's Manual, revised in 2016.

1.0 EXISTING CONDITIONS

The proposed project site is located at the intersection of Hanover, Kennebec, and Parris Street. A boundary plan has been prepared by Titcomb Associates of Falmouth, Maine dated January 25, 2018.

The property is in the B-7 Urban Commercial Business Zone. Abutting Uses include:

- North B-7 – Urban Commercial Business
- West B-7 – Urban Commercial Business
- South B-2b – Business Community
- East B-7 – Urban Commercial Business

A large portion of the site is occupied by the existing structures. The site is also comprised of a paved driveway, gravel, and concrete. The grades range from approximately 3 to 6%. The surface drops away from the structure on the north side and towards the structure on the south side.

1.1 Existing Soils

Onsite soil information includes the following:

- Soil Conservation Service Medium Intensity Soil Survey for Cumberland County
- United States Department of Agriculture Web Soil Survey

Given the soils information, listed above, no onsite wastewater is proposed; the applicant does not intend to perform a more intense hydric soil boundary delineation because the waiver requirements set forth in the City of Portland Technical Manual – Section 7 – Soil Survey, Rev. 6/17/11 are met.

The area within and surrounding the project includes soil types listed in the table below. The susceptibility of soils to erosion is indicated on a relative "K" scale of values over a range of 0.02 to 0.69. Higher "K" values indicate more erodible soils.

Table 1 - "K" Value		
Soils Type	**Subsurface**	**Substratum**
Au Gres Loamy Sand	.15	.15

The soil "K" value for the soil, listed above, shows a low susceptibility to erosion. The site's susceptibility to erosion is from the Soil Conservation Service Medium Intensity Soil Survey for Cumberland County. Although the soil "K" value shows a low susceptibility to erosion, implementation of the proposed Erosion & Sedimentation Measures by the contractor will be of the utmost importance given the sustained slope throughout the site.

1.2 Existing Erosion Problems

There are no signs of erosion.

1.3 Critical Areas

There are no critical areas that require special attention during construction.

1.4 Protected Natural Resource

The client is not aware of the presence of any existing significant natural features located on the site as listed in Section 14-526 (b) 1. of the Land Use Code. The project is not located within a watershed classified as an Urban Impaired Stream by the Maine DEP.

1.5 Previous Construction Activity (5 years)

Acorn Engineering, Inc. is not aware of any construction related activities within the project limits within the past 5 years.

1.6 Timber Harvesting

Acorn Engineering, Inc. is not aware of any timber harvesting within the past five years.

2.0 EROSION CONTROL MEASURES AND SITE STABILIZATION

As part of the site development, the following temporary and permanent erosion and sedimentation control devices shall be implemented. Devices shall be installed as described

in this report or within the plan set. See the Maine Erosion and Sediment Control Handbook for Construction: Best Management Practices for further reference.

2.1 Temporary Erosion Control Measures

The following temporary erosion and sedimentation control measures are planned for the project's construction period:

2.1.1 Crushed stone stabilized construction entrances shall be placed at all access points to the project site where there are disturbed areas. The following specifications shall be followed at a minimum:

- Stone size shall be 2-3 inches, or reclaimed or recycled concrete equivalent.
- The thickness of the entrance stone layer shall be no less than 6 inches.
- The entrance shall not be less than 20 feet wide, however not less than the full width of points where ingress or egress occurs. The length shall not be less than 50 feet in length.
- Geotextile fabric (woven or non-woven) shall be placed over the entire entrance area.
- The entrance/exit shall be maintained to the extent that it will prevent the tracking of sediment onto public road ways.

2.1.2 Siltation fence or erosion control berm shall be installed down gradient of any disturbed areas to trap runoff borne sediments until permanent stabilization is achieved. The silt fence or erosion control berm shall be installed per the details provided in the plan set and inspected before and immediately after each rainfall and at least daily during prolonged rainfall. Repairs shall be made if there are any signs of erosion or sedimentation below the fence line or berm. If there are signs of undercutting at the center or the edges, or impounding of large volumes of water behind the fence or berm, the barrier shall be replaced with a stone check dam.

2.1.3 Hay mulch including hydro seeding is intended to provide cover for denuded or seeded areas until revegetation is established. Mulch placed between April 15th and November 1st on slopes of less than 15 percent shall be covered by fabric netting and anchored with staples in accordance with the manufacturer's recommendation. Mulch placed between November 1st and April 15th on slopes equal to or steeper than 8 percent and equal to or flatter than 2:1 shall use mats or fabric netting and anchored with staples in accordance with the manufacturer's recommendation.

2.1.4 At any time of the year, all slopes greater than 3:1 shall be stabilized with Double Net Erosion Control Blanket Bionet SC150BN by North American Green or Approved Equal, or Erosion Control Mix Slope Protection as detailed within the plans.

2.1.5 All three adjacent streets shall be swept to control mud and dust from the construction site as necessary. Add additional stone to the stabilized construction entrance to minimize the tracking of material off the site and onto the surrounding roadways.

2.1.6 During demolition, clearing and grubbing operations, stone check dams shall be installed at any areas of concentrated flow. The maximum height of the check dam shall not exceed 2 feet. The center of the check dam shall be 6 inches below the outer edges of the dam. The contractor shall mulch the side slopes and install stone check dams for all newly excavated ditch lines within 24 hours of their creation.

2.1.7 Silt fence stake spacing shall not exceed 6 feet unless the fence is supported with 14-gauge wire in which case the maximum spacing shall not exceed 10 feet. The silt fence shall be "toed" into the ground.

2.1.8 Storm drain inlet protection shall be provided to storm drains using any of the following: hay bale drop inlet structures, silt fence drop inlet sediment filter, gravel and wire mesh drop inlet sediment filter, or curb inlet sediment filter. Barriers shall be inspected after every rainfall event and repaired as necessary. Sediments shall be removed when accumulation has reached ½ the design height.

2.1.9 Dust control shall be accomplished using any of the following: water, calcium chloride, stone, or an approved MDEP product. Dust control shall be applied as needed to accomplish dust control.

2.1.10 Temporary loam, seed, and mulching shall be used in areas where no other erosion control measure is used. Application rates for seeding are provided at the end of this report.

2.1.11 Stockpiles shall be stabilized within 7 days of formation unless a scheduled rain event occurs prior to the 7-day window, in which case the stockpile shall be stabilized prior to the rain event. Methods of stabilization shall be mulch, erosion control mix, or erosion control blankets/mats. Silt fence or a wood waste compost filter berm shall be placed downhill of any soil stockpile location.

2.1.12 For disturbance between November 1 and April 15, please refer to winter stabilization plan in this report and the Maine Erosion and Sediment Control BMP manual for further information.

2.1.13 It is of the utmost importance that stormwater runoff and potential sediment from the construction site be diverted around the proposed underdrains until the trench is backfilled.

2.2 Permanent Erosion Control Measures

The following permanent erosion control measures are intended for post disturbance areas of the project.

2.2.1 All disturbed areas during construction, not subject to other proposed conditions, shall receive a minimum 4" of loam, limed, and mulched. Erosion control blankets or mats shall be placed over the mulch in areas noted in paragraph 4.1 of this report.

2.2.2 All stormwater devices shall be installed and tributary areas stabilized prior receiving stormwater.

2.2.3 Refer to the Maine Erosion and Sediment Control BMP manual for additional information.

3.0 EROSION AND SEDIMENTATION CONTROL PLAN

3.1 The Construction Management & Erosion Control Plan is included within the plan set.

4.0 DETAILS AND SPECIFICATIONS

4.1 Erosion & Sedimentation Control Details and Specifications are included in the plan set.

5.0 STABILIZATION PLAN FOR WINTER CONSTRUCTION

Winter Construction consists of earthwork disturbance between the dates of November 1 and April 15. If a construction site is not stabilized with pavement, a road gravel base, 75% mature vegetation cover or riprap by November 15, then the site shall be protected with over-winter stabilization. Any area not stabilized with pavement, vegetation, mulching, erosion control mix, erosion control mats, riprap, or gravel base on a road shall be considered open.

The contractor shall limit the work area to areas that work will occur in during the subsequent 15 days and so that it can be mulched one day prior to a snow event. The contractor shall stabilize work areas prior to opening additional work areas to minimize areas without erosion control measures.

The following measures shall be implemented during winter construction periods:

5.1 Sediment Barriers

During frozen conditions, sediment barriers may consist of erosion control mix berms or any other recognized sediment barriers as frozen soil prevents the proper installation of hay bales or silt fences.

5.2 Mulching

All areas shall be considered to be denuded until seeded and mulched. Hay and straw mulch shall be applied at a rate of 150 lb. per 1,000 square feet or 3 tons/acre (twice the normal accepted rate of 75-lbs./1,000 s.f. or 1.5 tons/acre) and shall be properly anchored. Erosion control mix must be applied with a minimum 4-inch thickness. Mulch shall not be spread on top of snow. The snow shall be removed down to a one-inch depth or less prior to application. After each day of final grading, the area shall be properly stabilized with anchored hay or straw or erosion control matting. An area shall be considered to have been stabilized when exposed surfaces have been either mulched or adequately anchored so that ground surface is not visible through the mulch. Between the dates of November 1 and April 15, all mulch shall be anchored by either mulch netting, tracking or wood cellulose fiber. The cover will be considered sufficient when the ground surface is not visible through the mulch. After November 1st, mulch and anchoring of all exposed soil shall occur at the end of each final grading workday.

5.3 Soil Stockpiling

Stockpiles of soil or subsoil shall be mulched for over winter protection with hay or straw at twice the normal rate or with a four-inch layer of erosion control mix. This shall be done within 24 hours of stocking and re-established prior to any rainfall or snowfall.

5.4 Seeding

Between the dates of October 15th and April 1st, loam or seed shall not be required. During periods of above freezing temperatures finished areas shall be fine graded and either protected with mulch or temporarily seeded and mulched until the final treatment can be applied. If the date is after November 1st and if the exposed area has not been loamed, final grading with a uniform surface, then the area may be dormant seeded at a rate of 3 times higher than specified for permanent seed and then mulched.

Dormant seeding may be placed prior to the placement of mulch or erosion control blankets. If dormant seeding is used for the site, all disturbed areas shall receive 4" of loam and seed at an application rate of 5 lbs./1,000 s.f. All areas seeded during the winter shall be inspected in the spring for adequate catch. All areas insufficiently vegetated (less than 75% catch) shall be revegetated by replacing loam, seed and mulch. If dormant seeding is not used for the site, all disturbed areas shall be revegetated in the spring.

5.5 Over winter stabilization of disturbed soils

By September 15th, all disturbed soils on areas having a slope less than 15% shall be seeded and mulched. If the disturbed areas are not stabilized by this date, then one of the following actions shall be taken to stabilize the soil for late fall and winter:

- Stabilize the soil with temporary vegetation – By October 1st, seed the disturbed soil with winter rye at a seeding rate of 3lbs per 1,000 s.f., lightly mulch the seeded soil with hay or straw at 75 lbs per 1,000 s.f., and anchor the mulch with plastic netting. Monitor growth of the rye over the next 30 days. If the rye fails to grow at least three inches or fails to cover at least 75% of the disturbed soil before November 1st, then mulch the area for over-winter protection.

- Stabilize the soil with sod – Stabilize the disturbed soil with properly installed sod by October 1st. Proper installation includes pinning the sod onto the soil with wire pins, rolling the sod to guarantee contact between the sod and underlying soil, and watering the sod to promote root growth into the disturbed soil.

- Stabilize the soil with mulch – By November 15th, mulch the disturbed soil by spreading hay or straw at a rate of at least 150 lbs per 1,000 s.f. on the area so that no soil is visible through the mulch. Immediately after applying the mulch, anchor the mulch with plastic netting to prevent wind from moving the mulch off the disturbed soil.

5.6 Over winter stabilization of disturbed slopes

All stone-covered slopes shall be constructed and stabilized by November 15th. All slopes to be vegetated shall be seeded and mulched by September 1st. A slope is considered a grade greater than 15%. If a slope to be vegetated is not stabilized by September 1st, then one of the following action shall be taken to stabilize the slope for late fall and winter:

- Stabilize the soil with temporary vegetation and erosion control mats – By October 1st the disturbed slope shall be seeded with winter rye at a seeding rate of 3 lbs per 1,000 s.f. and then install erosion control mats or anchored mulch over the seeding. If the rye fails to grow at least three inches or fails to cover at least 75% of the slope by November 1st, then the contractor shall cover the slope with a layer of erosion control mix or with stone riprap.

- Stabilize the soil with sod – The disturbed slope shall be stabilized with properly installed sod by October 1st. Proper installation includes the contractor pinning the sod onto the slope with wire pins, rolling the sod to guarantee contact between the sod and underlying soil, and watering the sod to promote root growth into the disturbed soil. The contractor shall not use late-season sod installation to stabilize

slopes having a grade greater than 3H:1V or having groundwater seeps on the slope face.

- Stabilize the soil with erosion control mix – Erosion control mix shall be properly installed by November 15th. The contractor shall not use erosion control mix to stabilize slopes having grades greater than 2H:1V or having groundwater seeps on the slope face.

- Stabilize the soil with stone riprap – Place a layer of stone riprap on the slope by November 15th. A registered professional engineer shall be hired to determine the stone size needed for stability on the slope and to design a filter layer for underneath the riprap.

6.0 INSPECTION AND MAINTENANCE

A person with knowledge of erosion and stormwater control, including the standards and conditions in the permit, shall conduct periodic visual inspections of installed erosion control measures. The frequency of inspection shall occur at least once every two weeks, as well as after a "storm event". A "storm event" shall consist 0.5 inches of rain within a 24-hour period. The following Erosion and Sediment Control - Best Management Practices (BMP's) shall inspected in the manner as described.

6.1 Sediment Barriers

Hay bale barriers, silt fences and filter berms shall be inspected and repaired for the following if there are any signs of erosion or sedimentation below them. If there are signs of undercutting at the center or the edges of the barrier, or impounding of large volumes of water behind them, sediment barriers shall be replaced with a temporary check dam. Should the fabric on a silt fence or filter barrier decompose or become ineffective prior to the end of the expected usable life and the barrier is still necessary, the fabric shall be replaced promptly. Sediment deposits should be removed when deposits reach approximately one-half the height of the barrier. Filter berms should be reshaped as needed. Any sediment deposits remaining in place after the silt fence or filter barrier is no longer required should be dressed to conform to the existing grade, prepared and seeded.

6.2 Stabilized Stone Construction Entrances

The exit shall be maintained in a condition that will prevent tracking of sediment onto public rights-of-way. When the control pad becomes ineffective, the stone shall be removed along with the collected soil material and redistributed on site in a stable manner. The entrance should then be reconstructed. The contractor shall sweep or wash pavement at exits, which have experienced mud-tracking on to the pavement or traveled way. When washing is required, it shall be done on an area stabilized with aggregate, which drains into an approved sediment trapping device. All sediment shall be prevented from entering storm drains, ditches, or waterways.

6.3 Mulched Areas

All mulches must be inspected periodically, in particular after rainstorms, to check for rill erosion. If less than 90% of the soil surface is covered by mulch, additional mulch shall be immediately applied. Nets must be inspected after rain events for dislocation or failure. If washouts or breakage occur, re-install the nets as necessary after repairing damage to the slope. Where mulch is used in conjunction with ornamental plantings, inspect periodically throughout the year to determine if mulch is maintaining coverage of the soil surface. Repair as needed.

6.4 Dust Control

When temporary dust control measures are used, repetitive treatment shall be applied as needed to accomplish control.

6.5 Stormwater Appurtenances

All underdrains, storm drains, and catch basins need to be operating effectively and free of debris.

6.6 Erosion and Sedimentation Control Inspections:

Acorn Engineering has personnel qualified to conduct Erosion and Sedimentation Control Inspections. For further information, contact:

Contact: Will Savage, PE
Telephone: (207) 775-2655

Qualifications:

- Maine Professional Engineering License #11419
- Maine DEP - Certified in Maintenance & Inspection of Stormwater BMP's Cert #14
- Certified Erosion, Sediment and Storm Water Inspector (CESSWI) Cert #0293
- Certified Professional in Erosion and Sediment Control (CPESC) Cert. #4620

The Contractor has sole responsibility for complying with the Erosion and Sedimentation Report/Plan, including control of fugitive dust. The Contractor shall be responsible for any monetary penalties resulting from failure to comply with these standards.

7.0 IMPLEMENTATION SCHEDULE

The following implementation sequence is intended to maximize the effectiveness of the above described erosion control measures. Contractors should avoid overexposing disturbed areas and limit the amount of stabilization area.

1. Install a stabilized construction entrance in all locations where construction traffic will enter and exit the site.
2. Install perimeter silt fence or erosion control berm.
3. Commence installation of drainage infrastructure.
4. Install all other erosion control devices as necessary throughout the remainder of this schedule.
5. Commence earthwork operations, associated with the parking lot construction.
6. Commence installation of utilities.
7. Continue earthwork and grading to subgrade as necessary for construction.
8. Complete installation of drainage infrastructure, as well as other utility work.
9. Complete remaining earthwork operations.
10. Install sub-base and base gravels in paved areas.
11. Install paving, curbing and brickwork.
12. Loam, lime, fertilize, seed and mulch disturbed areas and complete all landscaping.
13. Once the site is stabilized, 90% catch of grass has been obtained, or mulching of landscape areas is complete, remove all temporary erosion control measures.
14. Touch up areas without a vigorous catch of grass with loam and seed.
15. Complete site signage and striping.
16. Execute proper maintenance of all temporary and permanent erosion control measures throughout the project.

The above implementation sequence should be generally followed by the site contractor. However, the contractor may construct several items simultaneously. The contractor shall submit to the owner a schedule of the completion of the work. If the contractor is to commence the construction of more than one item above, they shall limit the amount of exposed areas to those areas in which work is expected to be undertaken during the following 30 days.

The contractor shall re-vegetate disturbed areas as rapidly as possible. All areas shall be permanently stabilized within 7 days of final grading or before a storm event. The contractor shall incorporate planned inlets and drainage systems as early as possible into the construction phase.

8.0 CONCLUSION

The above erosion control narrative is intended to minimize the development impact by implementing temporary and permanent erosion control measures. The contractor shall also refer to the Maine Erosion and Sediment Control BMP manual for additional information.

9.0 ATTACHMENTS

- Temporary Seeding Plan
- Permanent Seeding Plan

TEMPORARY SEEDING PLAN

Site Preparation

The seeded areas shall be feasibly graded out to provide the use of equipment for seedbed preparation, seeding, mulch application, and mulch anchoring. If necessary, the site may require additional temporary erosion control measures outlined in the Erosion Control report.

Seedbed Preparation

Fertilizer shall be applied to the site at a rate of 13.8 pounds per 1,000 square feet. The composition of the fertilizer shall be 10-10-10 (N-P2O5-K2O) or equivalent.

Limestone shall be applied to the site at a rate of 138 pounds per 1,000 square feet.

Seeding

The composition and amount of temporary seed applied to a site shall be determined by the following table:

Seed	Pounds / 1,000 S.F.	Recommended Seeding Dates
Winter Rye	2.57	Aug-15 to Oct-1
Oats	1.84	Apr-1 to Jul-1 Aug-15 to Sep-15
Annual Ryegrass	0.92	Apr-1 to Jul-1
Sudangrass	0.92	May-15 to Aug-15
Perennial	0.92	Aug-15 to Sep-15

Mulching

Mulch shall be applied at a rate of 70 lbs – 90 lbs per 1,000 square feet. The mulch shall be installed at a minimum depth of 4 inches. The seeded area shall be mulched immediately after seed is applied. Mulching during the winter season shall be double the normal amount.

Conclusion

Please refer to the Maine Erosion and Sediment Control BMP manual for additional information pertaining to temporary seeding and mulching.

PERMANENT SEEDING PLAN

Site Preparation

The seeded areas shall be feasibly graded out to provide the use of equipment for seedbed preparation, seeding, mulch application, and mulch anchoring. If necessary, the site may require additional temporary erosion control measures outlined in the Erosion Control report.

Seedbed Preparation

Fertilizer shall be applied to the site at a rate of 13.8 pounds per 1,000 square feet. The composition of the fertilizer shall be 10-10-10 (N-P2O5-K2O) or equivalent.

Limestone shall be applied to the site at a rate of 138 pounds per 1,000 square feet.

Seeding

The composition and amount of permanent seed applied to a site shall be determined by the following table:

Seed	Pounds / 1,000 S.F.
Kentucky Bluegrass	0.46
Creeping Red Fescue	0.46
Perennial Ryegrass	0.11
Total	1.03

Mulching

Mulch shall be applied at a rate of 70 lbs – 90 lbs per 1,000 square feet. The mulch shall be installed at a minimum depth of 4 inches. The seeded area shall be mulched immediately after seed is applied. Mulching during the winter season shall be double the normal amount.

Recommendations

Permanent seeding is recommended to be completed in the spring. Later summer seeding is allowed if completed prior to September 1st. If seeding cannot be accomplished during the periods recommended for permanent seeding, then the contractor shall perform temporary seeding per the temporary seeding plan.

Conclusion

Please refer to the Maine Erosion and Sediment Control BMP manual for additional information pertaining to permanent seeding and mulching.

Section I

Utilities

Section I – Utilities

The proposed project will include installation of multiple utility services to the renovated building.

Water:

An existing 6" fire service water line currently services the existing building from a water main within Parris Street. This service will remain. A 4" domestic line is proposed to branch off the 6" line and function as the domestic line with the existing 2" domestic line to be retired.

Sewer:

An existing sewer service is located adjacent to Parris Street on the south side of the building. This lateral will be verified by the contractor and replaced if in poor condition. If the lateral is in good condition, it will remain servicing the building. Additionally, the sewer and storm infrastructure will be inspected and videoed prior to construction to confirm conditions and locations.

Stormwater:

There is currently one catch basin on site near the Kennebec/Hanover intersection. It is proposed to install a new catch basin with a hood and 3-foot sump at the front of the building as well as the rear. These basins will tie into the City's storm system. Additionally, an underdrain will run through the middle of the parking lot to provide drainage of groundwater. The roof drain/internal floor drain system that ties into the City's storm drains will remain as is.

Electric/Communications:

The existing building has aerial services off the utility poles within Parris and Hanover Street. These services and the utility pole at the rear of the building will remain.

Gas:

An existing abandoned gas line previously serviced the existing building from the gas main within Parris Street. A new gas line connecting to the main within Parris Street is proposed to serve the building. See the attached utility plan for more information.

Ability to serve letters have been sent out to the respective utility companies on February 26, 2018 in accordance with the City of Portland Code of Ordinances Chapter 14 Land Use, Section 14-527(g)(7). Responses from the utility companies are forthcoming.

ACORN ENGINEERING, INC.

Charter Communications
Attn: Mr. Mark Pelletier
118 Johnson Road
Portland, Maine 04102

February 26, 2018

Subject: 82 Hanover Street Redevelopment
Re: Ability to Serve

Mr. Pelletier:

On behalf of Tom Watson & Co., LLC, we are pleased to submit the following request for Charter's ability to serve the proposed redevelopment project. The project is located at 82 Hanover Street (Chart, Book, Lot 34-G-01), within the B-7 Zoning District in Portland, Maine. The project consists of the renovation of an existing two-story building that formerly served as the Department of Public Works repair facility, into a two-story mixed-use building including retailers, restaurants, and offices. Site improvements such as utilities, parking, and landscaping will also take place as part of this project.

The existing building on site is proposed to remain and be renovated. As seen on the attached Utility Plan, it is believed that the building has overhead services from the existing utility poles at the northerly end of Parris and Hanover Street. These services are to remain at this time.

Furthermore, the existing overhead lines will facilitate the new uses of the existing building.

On behalf of the client, we are requesting the following information:

1. Any additional information, such as utility mapping within Parris, Hanover, or Kennebec Street
2. Any easements for overhead services currently crossing the proposed development
3. Alternative connection locations from the property to the existing system
4. Charter's proposed infrastructure improvements within the project vicinity
5. Charter's ability to serve the project

I have attached an existing conditions plan created by Titcomb Associates and the proposed preliminary utility plan from our office to facilitate your review. Please do not hesitate to contact me or the office for any questions or clarifications.

Sincerely,

Alyssa Gartley, E.I.
Design Engineer
Acorn Engineering, Inc.

A C O R N
ENGINEERING, INC.

Central Maine Power Company
Attn: Mr. Paul DuPerre
162 Canco Road
Portland, Maine 04103

February 26, 2018

Subject: 82 Hanover Street Redevelopment
Re: Ability to Serve

Mr. DuPerre:

On behalf of Tom Watson & Co., LLC, we are pleased to submit the following request for CMP's ability to serve the proposed redevelopment project. The project is located at 82 Hanover Street (Chart, Book, Lot 34-G-01), within the B-7 Zoning District in Portland, Maine. The project consists of the renovation of an existing two-story building that formerly served as the Department of Public Works repair facility, into a two-story mixed-use building including retailers, restaurants, and offices. Site improvements such as utilities, parking, and landscaping will also take place as part of this project.

The existing building on site will remain and be renovated. As seen on the attached Utility Plan, it is believed that the building has overhead services from the existing utility poles at the northerly end of Parris and Hanover Street. These overhead services will remain will facilitate the new uses of the existing building. Loads have not been calculated at this time.

On behalf of the client, we are requesting the following information:

1. Any easements for overhead services currently crossing the proposed development
2. Alternative connection locations from the property to the existing system
3. CMP's proposed infrastructure improvements within the project vicinity
4. CMP's ability to serve the project
5. Access requirement to the CMP meters

I have attached an existing conditions plan created by Titcomb Associates and the proposed preliminary utility plan from our office to facilitate your review. Please do not hesitate to contact me or the office for any questions or clarifications.

Sincerely,

Alyssa Gartley, E.I.
Design Engineer
Acorn Engineering, Inc.

CENTRAL MAINE POWER

March 9, 2018

Acorn Engineering, Inc.
C/O Ms. Alyssa Gartley, E.I.
158 Danforth Street
Portland, Me 04102

RE: 82 Hanover Street, Portland, Maine

Dear Ms. Gartley,

This letter is to advise you Central Maine Power has sufficient three phase electrical capacity in the area to serve the subject project.

Once the project is accepted by the City of Portland, the owner will need to call our Customer Service Center at 1-800-565-3181 to sign up for a New Account and a SAP Work Request Order so we may provide an actual cost.

If you have any questions please feel free to call me at 828-2882.

Sincerely,

Paul DuPerre

Paul DuPerre
Energy Service Specialist

162 Canco Road, Portland, ME 04103
Telephone 800.750.4000, Fax 207.791.1026
cmpco.com

IBERDROLA USA

An equal opportunity employer

Printed on recycled paper

ACORN ENGINEERING, INC.

Fairpoint Communications
5 Davis Farm Road
Portland, Maine 04103

February 26, 2018

Subject: 82 Hanover Street Redevelopment
Re: Ability to Serve

To Whom It May Concern:

On behalf of Tom Watson & Co., LLC, we are pleased to submit the following request for Fairpoint's ability to serve the proposed redevelopment project. The project is located at 82 Hanover Street (Chart, Book, Lot 34-G-01), within the B-7 Zoning District in Portland, Maine. The project consists of the renovation of an existing two-story building that formerly served as the Department of Public Works repair facility, into a two-story mixed-use building including retailers, restaurants, and offices. Site improvements such as utilities, parking, and landscaping will also take place as part of this project.

The existing building on site is proposed to remain and be renovated. As seen on the attached Utility Plan, it is believed that the building has overhead services from the existing utility poles at the northerly end of Parris and Hanover Street. These services are to remain and will facilitate the new uses of the existing building.

On behalf of the client, we are requesting the following information:

1. Any additional information, such as utility mapping within Parris, Hanover, and Kennebec Street.
2. Any easements for overhead services currently crossing the proposed development
3. Alternative connection locations from the property to the existing system
4. Fairpoint's proposed infrastructure improvements within the project vicinity
5. Fairpoint's ability to serve the project

I have attached an existing conditions plan created by Titcomb Associates and the proposed preliminary utility plan from our office to facilitate your review. Please do not hesitate to contact me or the office for any questions or clarifications.

Sincerely,

Alyssa Gartley, E.I.
Design Engineer
Acorn Engineering, Inc.

ACORN ENGINEERING, INC.

Portland Water District
Attn: MEANS Department
225 Douglass Street
Portland, Maine 04104

February 26, 2018

Subject: 82 Hanover Street Redevelopment
Re: Ability to Serve

To Whom It May Concern:

On behalf of Tom Watson & Co., LLC, we are pleased to submit the following request for PWD's ability to serve the proposed redevelopment project. The project is located at 82 Hanover Street (Chart, Book, Lot 34-G-01), within the B-7 Zoning District in Portland, Maine. The project consists of the renovation of an existing two-story building that formerly served as the Department of Public Works repair facility, into a two-story mixed-use building including retailers, restaurants, and offices. Site improvements such as utilities, parking, and landscaping will also take place as part of this project.

It is believed that the existing building has an existing 6" fire service off Parris Street. This service is anticipated to adequately serve the sprinkler system and will remain. It is proposed to branch a 4" domestic line off the existing 6" line within Parris Street. Based upon Section 4 of the *Maine Subsurface Wastewater Disposal Rules*, the project anticipates the following design flows:

Estimate of Design Flows			
Classification of Water Demand	**Number of Units**	**Gallons per Day per unit**	**Total Gallons per Day**
Existing			
Office (Employees at place of employment with no showers: 12 GPD per employee)	10	12	120
Proposed			
Bar/ Eatery (12 GPD per employee + 15 GPD per seat)	5 employees 40 seats	12 15	660
Eating Place, 2 meals/day (20 GPD per seat + 12 GPD per employee)	10 employees 60 seats	12 20	1,320
Warehouse (100 GPD or 12 GPD per employee, whichever is greater)	-	-	100
Office/Retail (Employee at place of employment without showers: 12 GPD per employee)	20	12	240
Coffee shop/Bakery (100 GPD + 12 GPD per employee)	4	12	148

Fitness Center (50 GPD per 100 SF)	30	50	1,500
Small Brewery (2,500 GPD* + 12 GPD per employee or customer)	30 employees/customers	12	2,860
		Total Existing	**120**
		Total Proposed	**6,828**
		Net Change	**+6,708 GPD**
*Value based on statistical national research			

Based on the assumptions in the above table, the proposed project is anticipated to increase the net water demand by approximately 6,828 gallons per day (GPD). It should be noted that the majority of these values were developed using conservative estimates from the State of Maine Subsurface Wastewater Disposal Rules.

On behalf of the client, we are requesting the following information:

1. Any additional information, such as utility mapping within Parris, Hanover, and Kennebec Street.
2. Alternative connection locations from the property to the existing system
3. PWD's proposed infrastructure improvements within the project vicinity
4. Flow data for adjacent hydrants
5. PWD's ability to serve the project

I have attached an existing conditions plan created by Titcomb Associates, the fixture count spreadsheet, and the proposed preliminary utility plan from our office to facilitate your review. Please do not hesitate to contact me or the office for any questions or clarifications.

Sincerely,

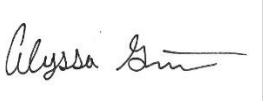

Alyssa Gartley, E.I.
Design Engineer
Acorn Engineering, Inc.

ACORN ENGINEERING, INC.

Unitil Service Corp.
Attn: Bridget Harmon
376 Riverside Industrial Parkway
Portland, Maine 04103

February 26, 2018

Subject: 82 Hanover Street Redevelopment
Re: Ability to Serve

Ms. Harmon:

On behalf of Tom Watson & Co., LLC, we are pleased to submit the following request for Unitil's ability to serve the proposed redevelopment project. The project is located at 82 Hanover Street (Chart, Book, Lots 34G 001001), within the B-7 Zoning District in Portland, Maine. The project consists of the redevelopment of an existing two-story building that formerly served as the Department of Public Works repair facility, into a two-story mixed-use building. The proposed uses include retail, restaurants, and offices.

The existing building on site is proposed to remain and be renovated. As previously coordinated with you, there is a retired gas service on site. We are proposing to install a new gas service in the location shown on the preliminary Utility Plan.

On behalf of the client, we are requesting the following information:

1. Any additional utility mapping such as gas lines on Parris, Hanover, or Kennebec Street.
2. Unitil's proposed infrastructure improvements within the project vicinity.
3. Unitil's ability to serve the project.

I have attached an existing conditions plan created by Titcomb Associates and the proposed preliminary utility plan from our office to facilitate your review. Please do not hesitate to contact me or the office for any questions or clarifications.

Sincerely,

Alyssa Gartley, E.I.
Design Engineer
Acorn Engineering, Inc.

February 28, 2018

Alyssa Gartley, E.I.
Acorn Engineering, Inc.
PO Box 3372
Portland, Maine 04104

Re: 82 Hanover St., Portland, Maine

Dear Alyssa,

Thank you for your interest in using natural gas for the above referenced project.

Unitil has natural gas on Parris St. and Kennebec St and can serve the project anticipated heat only load of 1,500-2,000 CFH.

As the project progresses, please send me the breakdown of natural gas equipment so that the information can be added to our records and reviewed by engineering for the official load approval. If you have any further questions or require additional information, please contact me directly at (207) 541-2543 or at carpenters@unitil.com.

Sincerely,

Scott Carpenter

Scott Carpenter
Senior Business Development Representative
Unitil Corporation
(o) 207-541-2543 (f) 207-541-2593

Section J

Solid Waste Disposal

Section J – Solid Waste Disposal

The property management company or Owner shall be responsible for locating the solid waste and recyclable material to the space allocated for solid waste storage. As noted on the Site Plan (C-10) the Owner should obtain an easement or ownership of the adjacent property (44 Hanover) for solid waste containers.

The solid waste containers will be fully enclosed and screened from the public view.

Section K

Fire Department Letter

A C O R N
ENGINEERING, INC.

Assistant Chief Keith Gautreau
City of Portland Fire Department
380 Congress St.
Portland, ME 04101

February 26, 2018

Subject: 82 Hanover Street – Fire Department Checklist
Section K of Application

On behalf of Tom Watson & Co., LLC, the design team is pleased to respond to the Portland Fire Department Site Review Checklist.

1. Name, address, telephone number of applicant

   Tom Watson & Co., LLC
   188 State Street, 3rd Floor
   Portland, Maine 04101
   (207) 252-0358

2. Name, address, telephone number of architect

   Ryan Senatore Architecture
   565 Congress Street #304
   Portland, Maine 04101
   (207) 747-5159

3. Proposed uses of any structures [NFPA and IBC classification]

   NFPA: Business / IBC: B

4. Square footage of all structures, including decks [total and per story]

Existing Building		
1st Floor	38,696	sf
2nd Floor	4,541	sf
Total	**43,237**	**sf**

Proposed Building		
1st Floor	38,696	sf
2nd Floor	4,876	sf
Total	**43,572**	**sf**

5. Elevation of all structures

   The existing height of the building will remain at 27 feet. This height is below the allowable 105 feet within the B-7 zone.

6. Proposed fire protection of all structures

   The building will have a sprinkler system with additional protection per code. Fire flows and requirements for system storage or booster pumping are subject to the fire professional design which will be performed prior the request for a building permit.

7. Hydrant locations

   Two existing hydrants are located along Kennebec Street, approximately 114' and 118' from the northwest side of the existing structure. Hydrant flow data from the Portland Water District once received may be made available to the Fire Department upon request.

8. Water main size and location

   The redevelopment will be serviced by the existing water main within Parris Street. The 6" fire service line currently existing will remain, serving the building's fire suppression system. The building is expected to have internal sprinkler risers and a Fire Department pump connection on the street side of the building.

9. Access to all structures [min. 2 sides]

   Access to the structure is provided directly on Hanover Street and Parris Street.

10. A code summary, proved by the Architect is included in this section.

<u>NFPA 1 – Chapter 18 Fire Department Access and Water Supply</u>

18.2 Fire Department Access:

The project site is located in a densely developed area and is surrounded by three public streets. The following pavement street width is currently available:

- Hanover Street: 32 feet
- Parris Street: 30 feet
- Kennebec Street: 36 feet
  Proposed changes to Kennebec Street by others have been approved by the city. The proposed width of Kennebec Street is 38 feet.

Per NFPA 1 – Chapter 18.2.3.3.1, there will be public street access within 50 feet of at least one exterior door. Per NFPA 1 – Chapter 18.2.3.2.2.1, all first story floors shall be located not more than 450 feet from a Fire Department access road.

City of Portland Technical Manual – Section 3 Public Safety

3.4.1 Every dead-end roadway more than one hundred fifty (150') feet in length shall provide a turnaround at the closed end. Turnarounds shall be designed to facilitate future street connectivity and shall always be designed to the right (refer to Figure I-5).
Response: Not applicable

3.4.2 Where possible, developments shall provide access for Fire Department vehicles to at least two sides of all structures. Access may be from streets, access roads, emergency access lanes, or parking areas.

Response: As depicted on the site plan, the proposed building layout provides a minimum of two paved access points to the structure: one from Parris Street and one from Hanover Street.

3.4.3 Building setbacks, where required by zoning, shall be adequate to allow for emergency vehicle access and related emergency response activities and shall be evaluated based on the following factors:

- *Building Height.*
- *Building Occupancy.*
- *Construction Type.*
- *Impediments to the Structures.*
- *Safety Features Provided.*

Response: The proposed development layout has contemplated emergency access conditions and provides for safe and efficient access along the public street for emergency vehicles.

3.4.4. Fire Dept. access roads shall extend to within 50' of an exterior door providing access to the interior of the structure.

Response: The building will be provided with exterior doors that will be within 50' of a Fire Department access route.

3.4.5. Site access shall provide a minimum of nine (9) feet clearance height to accommodate ambulance access.

Response: The proposed site maintains the required clearance height of nine feet in all cases.

3.4.6. Elevators shall be sized to accommodate an 80 x 24-inch stretcher.

Response: The proposed elevator will meet this requirement.

3.4.7. All structures are required to display the assigned street number. Numbers shall be clearly visible from the public right of way.

Response: The applicant will work with the City's Public Works Division to assign street addresses and numbering to meet City Standards.

Thank you for your review. Please let me know if you have any additional questions or comments.

Sincerely,

William H. Savage, P.E.
Principal
Acorn Engineering, Inc.

Code Review

Mar 7, 2018

82 Hanover Street

		IBC 2009		NFPA 101 2009	
2 floors above grade		502.1			
Sprinklers			NFPA 13		NFPA 13
Fire Alarm			Required		Required
Smoke and CO Detectors			Smoke and CO detectors required		Smoke and CO detectors required
Occupant Load		T 1004.1.1		7.3.1.2	
		Tenant 1	A-2 Bar, 2,382 sf / 15 = 159 occ.		
		Tenant 2	A-2 Restaurant, 3,109 sf / 15 = 207 occ.		
		Tenant 3	F-1 Industrial, 5,957 sf / 100 - 60 occ.		
		Tenant 4	M Mercantile, 2,194 sf / 30 = 74 occ.		
		Tenant 5	A-2. Coffee Shop, 1,356 sf / 30 = 91 occ.		
		Tenant 6	M Mercantile, 1,425 sf / 30 = 48 occ.		
		Tenant 7	A-3 Art Gallery, 1,587 sf / 15 = 7 = 227 occ.		
		Tenant 8	M Mercantile, 1,983 sf / 30 = 67 occ.		
		Tenant 9	M Mercantile, 2,062 sf / 30 = 69 occ.		
		Tenant 10	A-2 Bar, 1,796 sf / 15 = 120 occ.		
		Tenant 11	A-3 Fitness Center, 3,234 sf / 50 = 65 occ.		
		Tenant 12	F-2 Brewery 6,531 sf / 100 = 66 occ.		
	2nd fl.	Tenant 13	B. Business 1,860 sf / 100 = 19 occ.		
	2nd fl.	Tenant 14	B. Business 1,869 sf / 100 = 19 0cc.		
			Total Occupant load = 1291 sf		
Use Group(s)			Business (B)		
			Bar (A-2)		
			Mercantile (M)		
			Brewery (F-2)		
			Art Gallery (A-3)		
			Industrial (F-1)		

Construction Type				
	T 503	3B - mixed combustible unprotected		III (000) mixed combustible unprotected
Building Height and Area	T503	B = 3 stories and 19,000 sf area		
		A-2 = 2 stories and 9,500 sf area		
		A-3 = 2 stories and 9,500 sf area		
		M = 2 stories and 12,500 sf area		
		F-1 = 2 stories and 12,000 sf area		
		F-2 = 3 stories and 18,000 sf area		
	506.3	Sprinkler Increase for areas		
Building Elements	T 601	0 hr Structural Frame		
	T 602	2 hr Bearing Walls Exterior (sep. dist >= 10')		
	T 602	2 hr Bearing Walls Exterior (sep. dist <10')		
	T 601	0 hr Bearing Walls Interior		
	T 601	0 hr Non-Bearing Walls Interior		
	T 602	0 hr Non-Bearing Walls Exterior (sep. dist >= 30')		
	T 602	1 hr Non-Bearing Walls Exterior (sep. dist <30')		
	T 601	0 hr Floor Construction		
	T 601	0 hr Roof Construction		
Separations			6.1.14.4.1	Separation (with Sprinkler)
	508.4	Separated Occupancies (with Sprinkler)		
		B and M = 0 hr		B and M = 1 hr
		B and A = 1 hr		B and A = 1 hr
		B and F-1 = 0 hr		B and Industrial = 1 hr
		B and F-2 = 1 hr		B and Industrial = 1 hr
		A and M = 1 hr		A and M = 1 hr
		A and F-1 = 1 hr		A and Industrial = 1 hr
		A and F-2 = 0 hr		A and Industrial = 1 hr
		M and F-1 = 0 hr		M and Industrial = 1 hr
		M and F-2 = 1 hr		M and Industrial = 1 hr
	708	1 hr Mechanical Shaft < 4 stories		
	1022.1	1 hr Stair Shaft < 4 stories		

	1018.1	1/2 hr Corridor	38.3.6.1.2	0 hr corridor
	508.2.5	1 hr Boiler Room	38.3.2.1.1	1 hr Boiler Room
	508.2.5	1 hr Trash Room	38.3.2.1.1	1 hr Trash Room
	508.2.5	1 hr Storage Room	38.3.2.1.1	1 hr Storage Room
Distances and Exits				
	1016.1	250' Travel Distance to exits with Sprinklers		Industrial = 250' Travel distance sprinkled
			12.2.6.2.1	Assembly travel distance sprinklered = 250'
	1014.3	75' Common Path of Travel		Industrial common path 100'
			12.2.5.1.2	Assembly 75' common path
	1018.4	50' Dead End		Industrial dead end 50'
		20' in A use	12.2.5.1.3	Assembly 20' dead end
Unprotected Openings	T 705.8	15% when exterior wall sep. dist. is 3'>5'		
	T 705.8	45% when exterior wall sep. dist. is 10'>15'		
	T 705.8	75% when exterior wall sep. dist. is 15'>20'		
	T 705.8	Unlimited when exterior wall sep. dist. is 25'>30'		
	T 705.8	Unlimited when exterior wall sep. dist. is >30'		
Egress Stairs	1009.1	Occ. Load >50 = 44" min width	24.2.5.4	36" min. stair width
	1009.1	Occ. Load <=50 = 36" min width	7.2.2.2.1.2(B)	44" min. over 50 occ.
	1003.3	Handrails can protrude into stair 4.5" max	7.2.2.2.1.2	Handrails can protrude into stair 4.5" max
	1005.2	Door Swings may not reduce egress width by > 1/2		
	1009.2	80" min headroom	7.2.2.2.1.1(a)	6'-8" min. headroom
	1009.3	7" max. riser	7.2.2.2.1.1(a)	7" max. riser
	1009.3	11" min Tread depth	7.2.2.2.1.1(a)	11" min. tread
	1009.6	12' max. total rise between floors or landings	7.2.2.2.1.1(a)	12' max. height between landings
Ramps	1010.2	1:12 (8%) Max slope	7.2.5.2(a)	1:12 max. slope
	1010.6	60" long landings at top and bottom		
	1010.6	2% max slope of landings	7.2.5.2(a)	1:48 max. cross slope
	1010.8	>6" rise must have handrails on both sides of ramp		
Egress Corridors	1018.2	44" min. when Occ. > 50		
	1018.2	36" min. when Occ. <= 50		
	1018.2	24" min. at service corridors to mechanical equipment		

	Accessibility		Ch 11 of IBC 2009 does not apply as State of ME did not adopt it as part of MUBEC			
			Must meet ADA 2010			
	Plumbing		Business	TBD by tenant		
	2015 UPC					

Section L

Conformity with Land Use Ordinance

Section L – Conformity with Land Use Ordinance

The following outline is made in accordance with the City of Portland Code of Ordinances, Chapter 14 Land Use, Article V Section 14-526 as well as the City of Portland Technical Manual, Chapter 14 Standards for Local Site Location of Development Review.

OVERVIEW

The proposed mixed-use building has been designed to conform to City standards where possible, as well as improve upon existing non-conformities. This project conforms with the majority of the applicable standards of Portland's Land Use Ordinance Section 14-526 as demonstrated in the following narrative.

(a) Transportation Standards

1. Impact on Surrounding Street Systems:

   The site is located along the confluence of Hanover, Parris, and Kennebec Street. All surrounding streets are classified as local streets according to the City of Portland Federal Street Classification map. A minimal traffic increase is expected for this project due to the change in use of the existing building. However, the increase will be caused by standard vehicles as opposed to the current condition where large vehicles such as plow trucks and maintenance trucks utilize the property. Congestion of the intersections is not anticipated.

2. Access and Circulation:

   a. Site Access and Circulation:

      This project conforms with the design standards of Section 14-526 as demonstrated in the following narrative.

      (i) The development will provide safe access and internal circulation for both pedestrians and vehicles as seen on the Site Plan.

      (ii) The existing parking area can be accessed from Hanover Street. There is a proposed one-way driveway parallel to Kennebec Street that will serve as the sole vehicle ingress and egress. Traffic will enter through Hanover Street and exit to Parris Street. The functionality of all internal vehicle movements has been verified with AutoTurn, a computer program that models the turning radii of various types of vehicles.

      (iii) The site does not feature drive up services as mentioned in this requirement.

b. Loading and Servicing:

(i) Loading and unloading areas for the retail stores and restaurants will be accommodated within the existing street parking along the project's Hanover and Parris Street frontages. During off hours, the parking lot may be utilized.

c. Sidewalks:

(i) Brick sidewalks exist along Parris and Hanover Street. Extension of both sidewalks is proposed, as seen on the Site Plan, to connect the sidewalk network to the site. Proposed changes to Kennebec Street by the City and other consultants incorporate a 6-foot concrete sidewalk between the on-street parking and the property line which will be adjusted as part of the Kennebec improvements.

(ii) There are no proposed changes to the existing sidewalks.

(iii) A private brick sidewalk is proposed along the north entrance of the building which will connect the public sidewalks along Parris and Hanover Street. The existing sidewalks along Hanover and Parris Street provide access to the east and west sides of the building. Please refer to the Site Plan, Sheet C-10, for more information.

3. Public Transit Access:

a. Not applicable.

b. Not applicable.

c. Not applicable.

4. Parking:

a. Location and Required Number of Vehicle Parking Spaces:

(i) The proposed project will provide 39 parking spaces. This count is 23 below the required 62 spaces based upon the floor area and building uses. The retail shops do not factor into the required parking count because each business has less than 2,000 SF of floor space. Please refer to Section Q for more information regarding the parking analysis. Ultimately, the parking requirement will be determined by the Planning Board based upon our analysis and the City Transportation Engineer's recommendation.

(ii) A formal parking study is not required.

(iii) The proposed parking is not 10% or more over the requirement.

(iv) The parking space and aisle dimensions are in conformance with the

Technical Standards. Parking closest to Kennebec Street is compact in length. Please refer to the Site Plan for more information.

(v) The driveway and parking areas will be constructed of bituminous pavement which will drain water without eroding.

b. Location and Required Number of Bicycle Parking Spaces:

(i) The site plan includes racks for 14 bicycle spaces which exceeds the requirement.

c. Motorcycles and Scooter Parking:

(i) There are no areas designated for motorcycles or scooters at this time; however, parking is available through the on-site parking stalls and on-street parking.

d. Snow Storage:

(i) Due to the limited space within the parcel, a formal snow storage area is not proposed. The Owner will be responsible for coordinating snow removal from the site when necessary.

(ii) Not applicable.

5. Transportation Demand Management (TDM):

a. A TDM plan will be completed under separate cover and submitted to the City, if required.
b. A TDM plan will be completed under separate cover and submitted to the City, if required.
c. A TDM plan will be completed under separate cover and submitted to the City, if required.

(b) Environmental Quality Standards

1. Preservation of Significant Natural Features:

a. Not applicable.

b. Not applicable.

2. Landscaping and Landscaping Preservation:

a. Landscape Preservation.

(i) There are no existing trees or vegetation within the project parcel.

(ii) There are no trees 10 inches DBH or greater within the property.

(iii) It is not anticipated that the project will necessitate any tree protection.

(iv) A waiver is not requested.

(v) Not applicable.

b. Site Landscaping.

(i) Landscaped Buffers:

a. All loading and dumpster locations will be screened from view.

b. The project has a total frontage of 768 linear feet along Kennebec, Hanover, and Parris Street. It is required that a minimum of six shrubs or shrub alternatives per 45 feet of frontage are planted, therefore 102 shrubs are required. Due to the limited space within the property this requirement is not met. 34 shrubs or shrub equivalents have been incorporated into the design through a combination of landscaping within the setbacks and internally within the site. Additionally, planter boxes will be installed at the rear of the property and have not been counted as shrub alternatives.

As outlined in Section Q. Parking Analysis, the available front yard width has been drastically reduced from the existing condition due to circumstances outside of the project team's control. The Applicant has negotiated with Public Works to at least maintain room for two rows of parking. However, the compromise still does not allow for the required landscaping that otherwise would have occurred along the building's façade and Kennebec Street if the existing right-of-way were maintained. The Applicant would prefer to install the required landscaping, but due to the City's redesign of Kennebec Street, it is not feasible to provide the required landscaping for 768 feet of street frontage.

Based upon the City's altered right-of-way and the significant amount of street frontage, the project is not able to meet the requirement of 102 shrubs.

c. Not applicable.

d. Not applicable.

(ii) Parking Lot Landscaping:

a. Due to the limited space within the property, the landscaping requirement is not fully met. Four trees have been provided versus the required

sixteen. Similar to section b(i)b, the available front yard width has been decreased by the City and as a result, there is no available room for additional green space.

b. There is no proposed area with greater than 40 parking spaces without interrupted pavement.

c. Not applicable.

d. Not applicable.

e. Not applicable.

(iii) Street Trees:

a. Street trees are to be provided every 30 to 45 feet along the street frontage. This ratio equates to 20 trees. Although the four trees shown on the site plan are currently being allocated for the landscaping requirement for parking, they will also function as street trees.

b. The applicant will contribute to the City's Street Tree Fund in place of the 16 trees that are not able to be planted.

3. Water Quality, Stormwater Management and Erosion Control:

a. Stormwater.

(i) The site drainage will not be directed to flow or pond onto adjacent lots. The drainage patterns will largely be maintained as existing. Furthermore, impervious area on the site will be decreased, reducing runoff from the site.

(ii) Any stormwater that flows onto adjacent lots will not exceed the pre-development flows.

(iii) The runoff from the site into the public way will not increase from the pre-development condition.

(iv) The runoff to the separate storm drains is anticipated to be similar or slightly less. The separate storm drain connects to the combined system at the intersection of Parris and Kennebec.

b. A site specific Stormwater Management Plan has been developed for the project to show compliance with Section 5 of the Technical Manual, including the basic standards of MEDEP Chapter 500. Please refer to sections G and H, the Stormwater Management and Erosion & Sedimentation Control Plans, respectively, for more information.

c. The project is not located in a watershed of an urban impaired stream as

listed by the MEDEP.

d. Not applicable.

e. The development is not anticipated to pose a contamination risk to groundwater during or after construction. The project will be serviced by a public wastewater system.

f. The development will provide for adequate and sanitary disposal of sewage in accordance with Section 2 of the Technical Manual.

(c) Public Infrastructure and Community Safety Standards

1. Consistency with City Master Plans:

   a. The project has been designed to be consistent with the City's Zoning Ordinance and off-site infrastructure.

   b. Not applicable.

2. Public Safety and Fire Prevention:

   a. The site has been designed to promote safe and inviting public access.

   b. Adequate emergency access has been provided. Fire trucks and ambulance will be able to access a minimum of three side of the building.

   c. Two existing hydrants are located along Kennebec Street, approximately 114' and 118' from the northwest side of the existing structure.

3. Availability and Adequate Capacity of Public Utilities:

   a. Ability to Serve letters have been sent to the respective companies. Responses are forthcoming.

   b. The electrical service will be wired underground.

   c. The new sewer and stormwater infrastructure will meet the provisions of the Technical Manual.

   d. The project will be served by connection to the public sewer system within Hanover, Parris, and Kennebec Street.

   e. The sanitary sewer collection system meets all applicable sections of the Technical Manual. The stormwater management system is designed to meet the standards of Chapter 500.

f. A space allocated for solid waste storage can be seen on the Site Plan (C-10). The solid waste containers will be fully enclosed and screened from the public view.

(d) Site Design Standards

1. Massing, Ventilation and Wind Impact:

   a. Not applicable.

   b. Not applicable.

   c. Not applicable.

2. Shadows:

   a. Not applicable.

3. Snow and Ice Loading:

   a. The structure will not distribute snow and ice onto adjacent properties.

4. View Corridors:

   a. The proposed structure will not increase the existing obstruction of the public views corridors.

5. Historic Resources:

   a. The development is not located in a historic district, historic landscape district or City designated landmark.

   b. The development is not located adjacent to designated landmarks, historic district, or historic landscape district.

   c. There are no known archaeological resources on the site.

6. Exterior Lighting:

   a. Site Lighting.

      (i) Exterior lighting will be designed to meet the requirements of Section 12 of the Technical Manual.

      (ii) The project parcel does not abut any residential properties.

   b. Architectural and Specialty Lighting.

(i) No architectural or specialty lighting is proposed.

(ii) No up-lighting is proposed.

c. Street Lighting.

(i) No new street lights are proposed.

7. Noise and Vibration:

a. The HVAC system will meet the applicable state and federal emissions requirements and will also be screened and directed away from abutters.

8. Signage and Wayfinding:

a. All street and wayfinding signage shall meet the requirements of the Manual on Uniform Traffic Devices (MUTCD) and Division 22 of the City Code.

(i) The project is not located in a historic district or subject to Article IX.

(ii) Signage will complement the subject building and its immediate context.

(iii) All street and wayfinding signage shall meet the requirements of the Manual on Uniform Traffic Devices (MUTCD) and Division 22 of the City Code.

9. Zoning Related Design Standards:

a. The project has been designed to meet the standards set forth in the B-7 zone. Please refer to the Site Plan for more information on the Space & Bulk Standards.

Section M

Request For Waivers

Section M – Request for Waivers

The following waivers are being requested for the proposed project located at 82 Hanover Street.

1. ***Compact Spaces*** – The Applicant is requesting a waiver to provide greater than 20% compact spaces. The high percentage of compact spaces is the result of the redesigned Kennebec Street that will be built by the City in the 2018 construction season. The original design depicted a right-of-way that would have not allowed for two rows of parking within the 82 Hanover site. As a compromise, the design team collaborated with Public Works to modify the proposed right-of-way.

   The compromise resulted in essentially maintaining the proposed streetscape with a 6-foot sidewalk and 6 on-street parking spaces. The constrained parking lot width at 82 Hanover allowed for one row of angled standard parking and one row of angled compact parking. As a result, 19 of the proposed 39 parking spaces have been proposed to be compact spaces (9'x15').

   If the right-of-way had not been adjusted from its existing condition or the on-street parking had been eliminated, the available width on-site would have allowed for 46 standard parking spaces at 90 degrees. The original right-of-way would have also allowed for buffering between the sidewalk and parking spaces.

   Overall, the proposal to provide nearly 50% compact spaces was a design decision made in conjunction with Public Works and is the most desirable outcome given the available dimensions. The site circulation has been confirmed to be functional with a computer simulation, AutoTurn.

   Please refer to Section Q for more information on the parking requirements.

2. ***Parking Lot Dimensions*** – The Applicant is requesting a waiver for the parking dimensions outlined in the City's technical manual. The proposed parking lot features a one-way drive aisle and stalls oriented at a 75-degree angle. The technical manual does not explicitly identify the dimensional requirements for this layout. However, adequate clearance has been provided to ensure functional circulation. This has been confirmed by AutoTurn, a circulation program that uses a turning template to simulate vehicular movements.

3. ***Street Trees*** – The Applicant is requesting a waiver for the required street trees. Based on the 772 feet of street frontage that the property has, 17 street trees are required. The revised Site Plan proposes 10 street trees. The remaining 7 tree requirement is not feasible given the site constraints noted above along Kennebec St. A contribution to the City's tree fund is anticipated to be made.

4. ***Landscaping*** – The Applicant is requesting a waiver for the required planting total. As described in the first waiver, a significant amount of private land (2,576 square feet) was eliminated from the site's frontage along Kennebec due to the City's corridor improvement plans. Because of this, the site is extremely constrained. A 5-foot sidewalk has been proposed along the building to access the doors. From there, one row of standard parking spaces, a reduced width one-way drive aisle and one row of compact spaces are provided which is the extent of available room in between the building the new sidewalk along Kennebec Street. Because of this scenario and the significant amount of street frontage that drives up the landscaping requirement, the required number of plantings cannot feasibly be met.

   There are four landscaped islands within the parking lot which will feature native perennials,

shrubs, and shade trees. Overall, this is a significant improvement compared to the existing condition in which gravel, broken pavement, and concrete populate the front yard. Additionally, planters in the rear of the parcel will contribute to the green space.

5. **Curb Cuts –** The Applicant is requesting waiver to allow four curb cuts. The site features six existing curb cuts. The project proposes to improve this condition by implementing the following actions:
    - Close two existing curb cuts with vertical granite curb in front of the overhead doors.
    - Narrow two existing curb cuts at the entrance (Hanover St) and exit (Parris St) for the one-way parking lot drive aisle.
    - Maintain two existing curb cuts along Old Lancaster. This condition is subject to the outcome of the traffic management plan and traffic movement permit.

Section N

Easements

Section N - Easements

The following existing easements were recorded by Titcomb Associates:

1. The former location of Lancaster Street is subject to "The right to enter into this section of Lancaster Street for the purpose of maintenance repair or replacement of the existing…sewer…is hereby reserved unto the City of Portland until such time said sewer is abandoned or discontinued.

2. The portion of the property described in Book 23202, Page 38 is subject to use restrictions as set forth in Book 2302, Page 38. The language describes that the property may not be used for a residential use.

There are no proposed easements at this time.

A C O R N

ENGINEERING, INC.

Section O

Architectural Design Narrative

A C O R N Engineering, Inc. • www.acorn-engineering.com
207-775-2655 • PO Box 3372 • Portland • Maine • 04104

RYAN SENATORE **ARCHITECTURE**

March 7, 2018

Planning Department
City of Portland Maine
389 Congress Street
Portland, Maine 04101

Re: 82 Hanover Design Narrative

The proposed design for 82 Hanover Street is a multi-tenant mixed use project. The building's exterior design will remain relatively similar to its current composition. The existing multi-pane windows will be replaced with new insulated aluminum frame windows with a grille pattern to match the existing. New exterior entries are proposed at each tenant, working with the existing fenestration rhythm, entries facing Kennebec street will be new storefront glazing with projecting canopies, and the entries on Hanover and Parris Streets will be recessed storefronts so that the doors do not swing into the sidewalk. A new larger primary entry canopy is proposed on the elevation facing Kennebec Street, this entry will serve the majority of the tenants and provide accessible access, this entry is a composition of storefront and spandrel glazing with a projecting canopy above the door.

The existing brick facades will be repaired on an 'as needed' basis, and the existing painted concrete foundation will be repainted with a new color.

We look forward to discussing the vision for 82 Hanover at the upcoming meeting.

Sincerely,

Ryan Senatore, AIA LEED-AP

Principal

207-747-5159

senatorearchitecture.com

ryan@senatorearchitecture.com

SERIES 700

Historic Steel and Wood Replica Windows

Heavy Commercial

DETAILS

Specially designed for the narrow sightline needs of historic projects, approved on NPS funded buildings

Fixed to vent sightlines can be made even, or stepped to faithfully meet design goals

Multiple grid options to create Simulated Divided Lite (SDL), exterior, between glass or interior

Designed with flexibility for single opening systems, Allows replication of steel "floating vent" windows

Utilizes complete Thermal Break vent and master frame for optimal insulating

Features 1 1/8" clear insulating glass made with Super Spacer, the world's only TrueWARM edge technology

Interior bead glazed for easy repair and insulation

Heavy duty 4 bar stainless hinges with brass slide

Cost effective: Installed at fraction of the cost to refurbish, or replace with new steel windows.

UNIVERSAL
Window and Door

Heavy Commercial
Steel Replica
Wood Replica

Performance

AAMA/WDMA/CSA101/1S2/A440-05

Structural Rating:
AP-HC 80 @ 60" x 36"
Outward Projecting

Uniform Structural Load:
120 psf

Water Resistance:
@ 15 psf: No Entry

Air Infiltration:
@ 6.24 psf: .10 cfm

Options

Glass:
Low-E, Soft-Coat, Solar Control, Argon, Tempered, Obscure, Wire or Spandrel
Operators:
Roto-op or Under-screen Push Bar hardware
Wrapping Systems:
Exterior Panning Systems
Interior Trim Systems
Receptor Systems
Flange Frame
Backer Rod Stops, Installation Clips
Mull Systems:
Self-Mulling
I-Mullions
Structural Mullions
Finishes:
Special finishes and custom architectural finishes are available
Internal, External and Interior Grids

Specifications

General: All projecting windows are the thermally improved Series 700 as manufactured by Universal Window and Door. They Include all necessary hardware and related items described and shown on the plans.
Material: Aluminum used is heavy commercial quality extruded aluminum 6063-T5 alloy with an internal polyurethane-filled structural thermal barrier. Frame and sash are designed for inside glazing using snap-in aluminum extruded bead.
Construction: All ventilator corners shall be mitered and reinforced with extruded keys that are crimped into place. All joints are sealed weathertight. Corners of frame are closely fitted, telescoped, butt-jointed and tightly joined by mechanical means. Ventilator sections will be double weather-stripped, with flexible EDPM seals keyed into extruded grooves.
Glazing: At frames and vents, all glazing legs are 3/4" high with an inside surface to secure glazing tape or extruded EPDM seals. Glazing beads are extruded, snap-in type, no less than .050" and accommodate up to and including 1 1/8" glass, panels or louvers.
Finish: Aluminum surfaces on the Series 700 are undercoated with a 5-stage chromate pre-treatment, then have an electrostatically applied, baked-on enamel finish conforming to AAMA 603.8 standards. Standard colors are white, black, bronze, green and beige. Special colors, architect-specified finishes and anodized finishes are available at an added cost.
Hardware: Universal's ventilator windows incorporate two four-bar, heavy duty friction hinge assemblies securely fastened to the frame and vent members, operating in a track provided with an adjustable brass friction shoe that conceals when closed. Standard locking hardware consists of cam locking handles cast of white bronze, and secured with stainless steel fasteners.
Screens: The optional screens have extruded aluminum frames securely joined at the corners, and finish will match that of the window frame. Projected window frames feature a wicket door as standard. Screen cloth is 18 x 16 mesh fiberglass standard. WARNING: Insect screens are in-tended to provide reasonable insect control, and are not intended to provide for the retention of objects or persons from the interior.
Thermal Barrier: The thermal barrier consists of a two-part, chemically curing, high strength polyurethane casting resin. This barrier provides a continuous, uninterrupted break around the entire perimeter of the frame and vent, and it is not bridged by any metals, conductors or other materials.
Erection: Window frames must be installed straight, plumb and level without springing or twisting, and securely fastened in place in accordance with manufacturer details and appropriate building codes.. Windows are to be caulked with a suitable compound and using appropriate joint design to accomplish a thoroughly water-tight installation around the interior and exterior perimeter of the window frame and wall opening. Intersecting joints, mullions, and panning must be sealed to address field conditions.

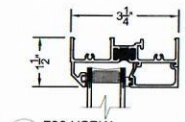

1 700 HSRW
Fixed Frame

1a 700 HSRW
Assembled Fixed Frame

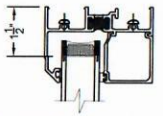

1b 700 HSRW
LG. FIXED FRAME

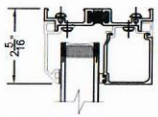

1c 700 HSRW
Assembled
lg. Fixed Frame

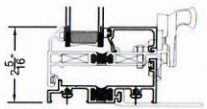

2 700 HSRW
Vent @ Sill
Cam Lock Shown

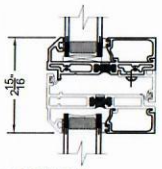

3 700 HSRW
Vent @ Horizontal Mullion

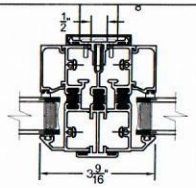

4 700 HSRW
Fxd / Fxd @ 3 Pc. Mullion

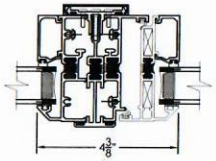

5 700 HSRW
Vent / Fxd @ 3Pc.Mullion

6 700 HSRW
Center Vent @ Vertical Mullion

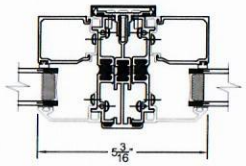

7 700 HSRW
Lg.Fxd / Lg.Fxd@ 3Pc. Mullion

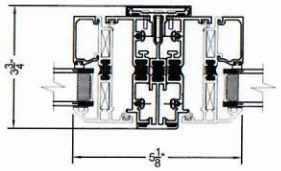

8 700 HSRW
Vent / Vent @ 3Pc. Mullion

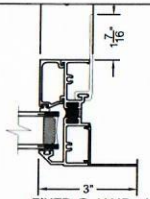

FIXED @ JAMB w/
FLANGE &
STRAP ANCHOR

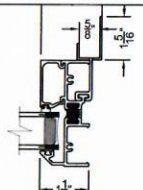

FIXED @ JAMB w/
DRYWALL
STRAP ANCHOR

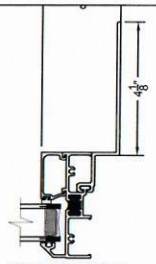

FIXED @ JAMB w/
EXTENDED OFFSET
STRAP ANCHOR

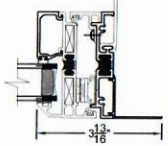

VENT @ JAMB w/
FLANGE &
STRAP ANCHOR

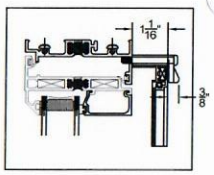

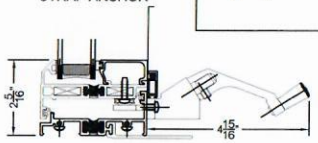

VENT w/ ROTO OPERATOR
STRAP ANCHOR

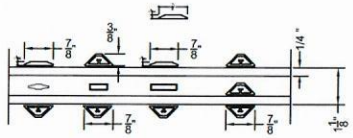

9 700 HSRW
Ext. Applied / GBG

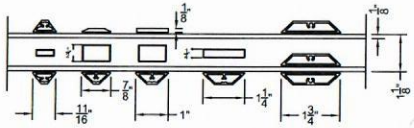

9a 700 HSRW
OPTIONAL Ext. APPLIED MUNITNS

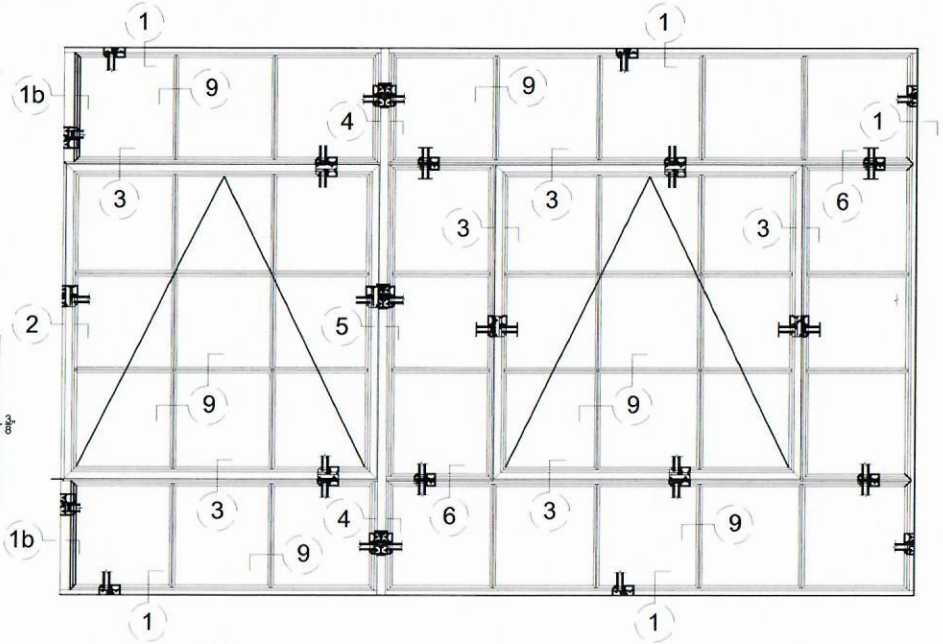

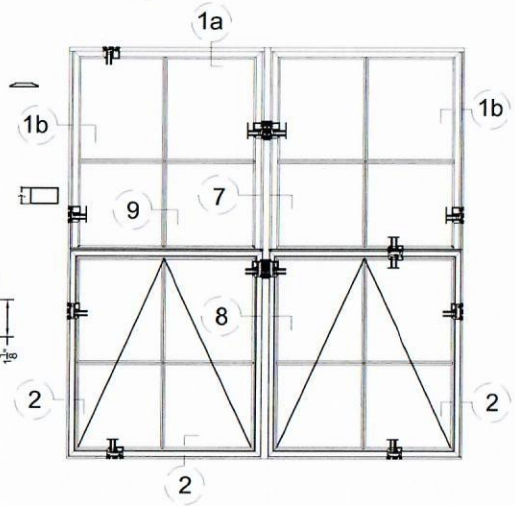

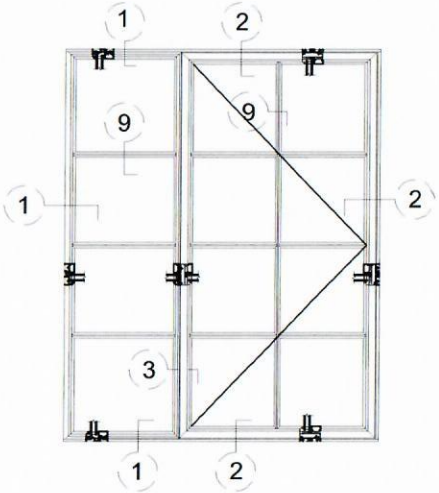

UNIVERSAL

UNIVERSAL WINDOW
AND DOOR, LLC.
303 Mechanic Street
Marlborough, MA 01752
800-633-6108 508-481-2850
www.universalwindow.com

PROJECT NAME
700 STEEL WINDOW
DETIALS

CLIENT

PROJECT TEAM

REVISIONS

#	SUBJECT	DATE
1		
2		
3		
4		
5		
6		
7		
8		

DRAWING INFORMATION
FEB. 29, 2012
SIZE OF SHEET
DESCRIPTION
SCALE
PROJECT #
FILE NAME
FLM
SHEET #

DRAWING NUMBER
W-1

ACORN ENGINEERING, INC.

Q. Lighting

Please find attached the photometric plan, associated cut sheets, and installation requirements demonstrating fixed mounts with full light cutoff. Please note that the calculations do not include existing sources of light such as the Bayside light fixtures along Hanover Street on the opposite side of the street from the 82 Hanover building.

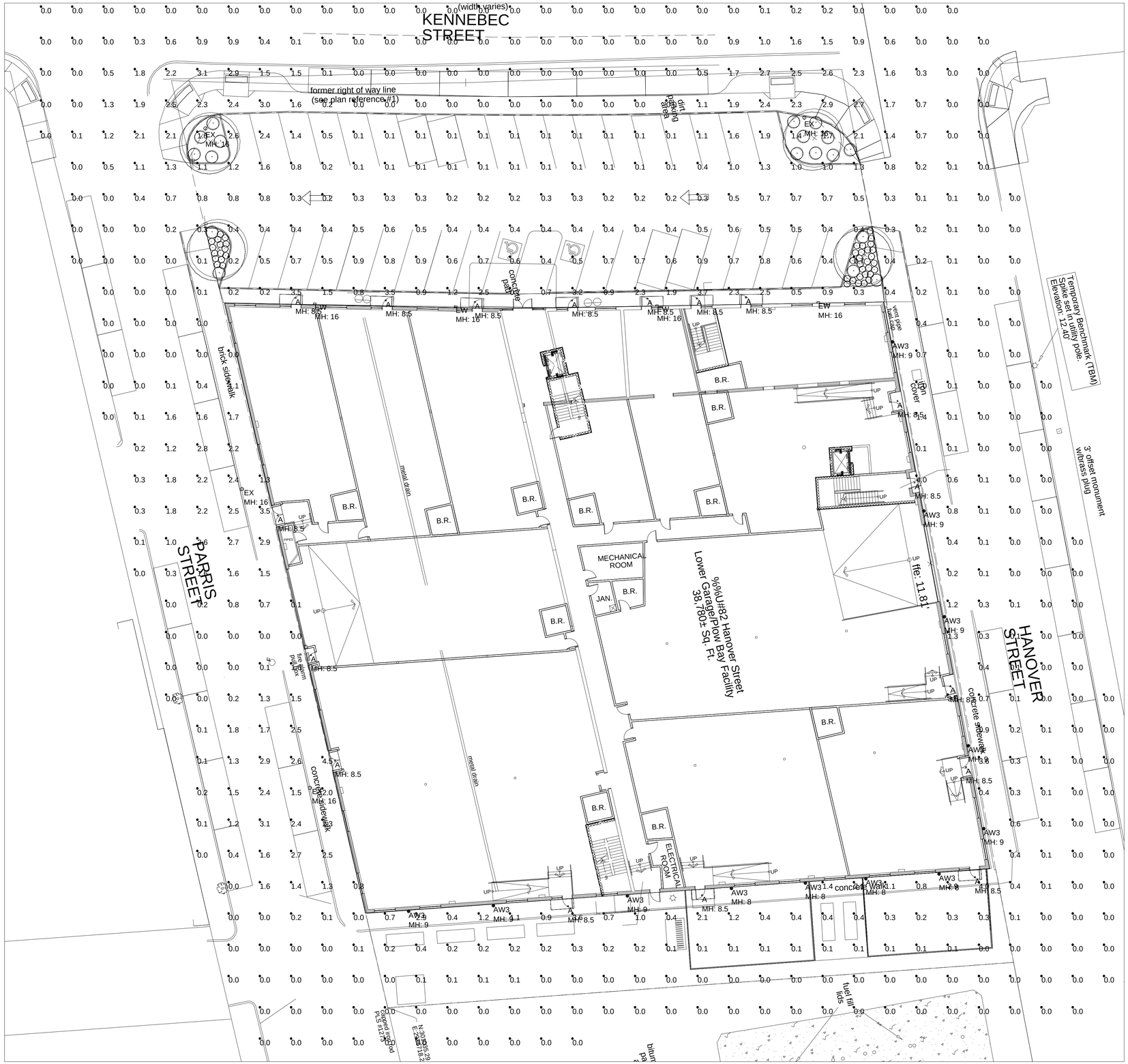

PLAN VIEW

NOTES:
1) EXACT MOUNTING DETAILS TO BE DETERMINED AT JOBSITE BY OTHERS.
2) CALCULATIONS MAY or MAY NOT SHOW THE EFFECT OF SHADOWING CAUSED BY BUILDINGS AND OBJECTS WITHIN THE CALCULATED SPACE OR IN THE SITE AREA.
3) READINGS SHOWN ARE INITIAL HORIZONTAL FOOTCANDLES ON A FLAT SITE WITHOUT REFLECTIONS OR OBSTRUCTIONS UNLESS OTHERWISE INDICATED.
4) THIS CALCULATION IS BASED ON LIMITED INFORMATION SUPPLIED BY OTHERS TO SWANEY LIGHTING ASSOCIATES AND STANDARD ASSUMPTIONS OF THE SPACE AND/OR SITE.
5) CONFORMANCE TO CODES AND OTHER LOCAL REQUIREMENTS AS DETERMINED BY THE AHJ ARE THE RESPONSIBILITY OF THE OWNER AND/OR THE OWNER'S REPRESENTATIVE.
6) THIS LAYOUT DRAWING MUST BE COORDINATED WITH THE SITE LOCATION FOR CORRECT FIXTURE ORIENTATION.
7) DOCUMENTS PRINTED OR PLOTTED FROM ELECTRONIC FILES MAY APPEAR AT OTHER THAN THE DESIRED OR ASSUMED GRAPHIC SCALES. IT IS THE RESPONSIBILITY OF THE RECIPIENT TO VERIFY THAT THE PRINTED OR PLOTTED-TO-SCALE DRAWING IS PRINTED TO SCALE.

Calculation Summary

Label	Avg	Max	Min
site	0.50	4.5	0.0

Luminaire Schedule (note fixture cataloge numbers are not complete)

Type	Qty	Lum. Lumens	LLF	Lum. Watts	Description
A	17	723	0.900	8.422	BLSD5-09C3-30KS-90-S-WH
EW	4	1471	0.900	13.9	TRP1-12L15-3K7-4
EX	4	6220	0.900	109	ESL - CITY STREET LIGHT
AW3	12	954	0.810	20.2131	BWM-LED-L17-SD12 pro-rated for 3k

site 37759 4-13-18.AGI

GENERATED BY SWANEY LIGHTING, SCARBOROUGH ME - 207-883-7100 - swaneylighting.com

TITLE
82 HANOVER ST
PORTLAND, ME
SITE LIGHTING LAYOUT

Date:4/13/2018

GENERATED FOR:
RYAN SENATORE ARCHITECTURE

SCALE NOT TO SCALE

Page 1 of 1

SWANEY LIGHTING ASSOCIATES, INC.

NOTICE: THIS DRAWING IS THE EXCLUSIVE PROPERTY OF SWANEY LIGHTING ASSOCIATES. ITS ACCEPTANCE CONSTITUTES AN AGREEMENT THAT THE DRAWING WILL BE TREATED AS CONFIDENTIAL. THIS DRAWING IS TO BE USED FOR NO PURPOSE OTHER THAN AS DETAILED IN WRITING BY SWANEY LIGHTING ASSOCIATES. THIS DRAWING IS TO BE KEPT CONFIDENTIAL, RETURNED UPON REQUEST AND IS NOT TO BE COMMUNICATED, DISCLOSED OR COPIED; EXCEPT AS EXPRESSLY AUTHORIZED BY SWANEY LIGHTING ASSOCIATES.
THE ARRANGEMENT OF LIGHTING FIXTURES INCLUDED IN THIS DRAWING, IT IS PROVIDED USING FIXTURE PHOTOMETRICS PROVIDED BY THE MANUFACTURER AND IS BASED ON THE BEST UTILIZATION OF LIGHTING FIXTURES AVAILABLE. SWANEY LIGHTING ASSOCIATES DOES NOT GUARANTEE THE PERFORMANCE SHOWN IN ES FILE IS NOT THE RESPONSIBILITY OF THE MANUFACTURER. ITS USE FOR ANY OTHER PURPOSE IS NOT AUTHORIZED BY SWANEY LIGHTING ASSOCIATES.

Submitted by Swaney Lighting			
	Job Name: 82 Hanover st - site	**Catalog Number:** BLSD5-09C3-30KS-90-S-WH-CC-UNV-D2 Notes:	**Type:** **A** SLA18-37759

USAI® Lighting

BeveLED BLOCK® Downlight — BLSD5

BEVELED BLOCK® DOWNLIGHT

BEVELED BLOCK® DOWNLIGHT - CONDUIT CUT OUT

usailighting.com/block

Keep ceiling height right where it is! Specifically designed to work with surface-mounted conduit and junction boxes, BeveLED BLOCK has a modern look that's perfect for lofts, offices, and open architectural spaces. Also available with solid-sides styling shown above, Block also creates a finished look when recessed conduit is possible.

FEATURES

- High performance architectural lighting solution for industrial or exposed concrete ceiling types where recessed lighting is not an option
- Convenient conduit cutouts provide access for surface-mounted conduit to pass through the luminaire
- Smooth, modular solid and keyhole slots are interchangeable and user configurable to allow for simple on site customization in the field.
- BeveLED BLOCK is available in a range of standard and custom colors to complement your project, whether an industrial or refined look is desired.
- Industry leading illumination and craftsmanship

BEVELED BLOCK DOWNLIGHT PERFORMANCE DATA

LED COLOR CHOICES

DELIVERED* PERFORMANCE:	Classic White 9W		12W		16W		24W		Warm Glow Dimming 16W	
Color Rendering Index	80+ CRI	90+ CRI	80+ CRI	90+ CRI	80+ CRI	90+ CRI	80+ CRI	90+ CRI	80+ CRI	90+ CRI
Source Lumens:	1150	900	1300	1025	1725	1350	2400	1875	1275	1025
Lumens Per Watt:	100	74	93	73	93	72	86	67	69	55
Delivered Lumens:	850	675	1125	875	1475	1150	2050	1600	1100	875

*Performance data based on 3000K, 80+ CRI

CORRELATED COLOR TEMPERATURE	Classic White 2200K	2700K	3000K	3500K	4000K	Warm Glow Dimming 2700K	3000K	3500K
Color Rendering Index:	80+	80+ 90+	80+ 90+	80+	80+	80+ 90+	80+ 90+	80+
Multiplier for Lumen Output:	0.72	0.94 0.78	1.00 0.78	1.00	1.06	0.94 0.79	1.00 0.81	1.00

usailighting.com
info@usailighting.com
T 845–565–8500
F 845–561–1130
1126 River Road
New Windsor, NY 12553

© 2016. USAI, LLC. All rights reserved.
All designs protected by copyright.
Covered by US Patents: 8,581,520, and 8,456,109.
Patents pending. USAI, BeveLED BLOCK are registered trademarks of USAI, LLC. Revised 05/25/2017

Submitted by Swaney Lighting			
	Job Name: 82 Hanover st - site	**Catalog Number:** BLSD5-09C3-30KS-90-S-WH-CC-UNV-D2 Notes:	**Type:** **A** SLA18-37759

USAI® Lighting

BeveLED BLOCK® Downlight — BLSD5

CC - CONDUIT CUTOUT MOUNTED

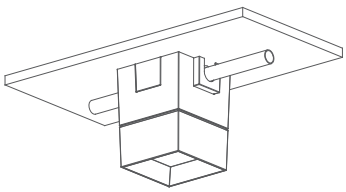

4"OCTAGONAL JUNCTION BOX DETAIL

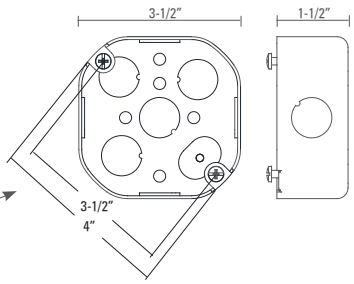

4"Ø X 1-1/2" DEEP
OCTAGON J-BOX (BY OTHERS)

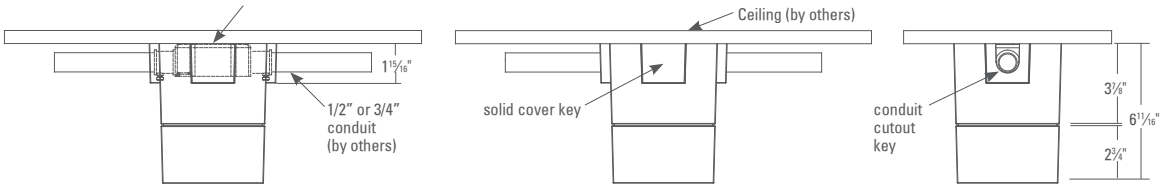

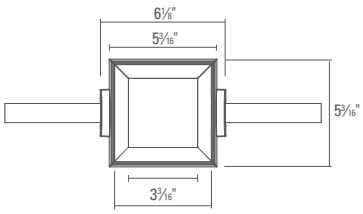

SOLID COVER KEY

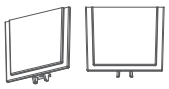

3 provided with each CC style BLSD5

CONDUIT CUTOUT KEY

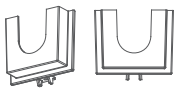

3 provided with each CC style BLSD5

CONDUIT CUTOUT MOUNTING EXAMPLE

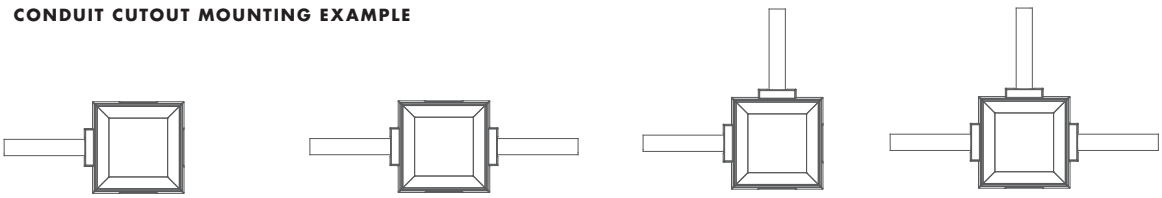

Conduit End | Straight Conduit | L Conduit | T Conduit

SJ - Surface mount to surface mounted 4"octagonal j-box
RB - Surface mount to recessed mounted 4"octagonal j-box

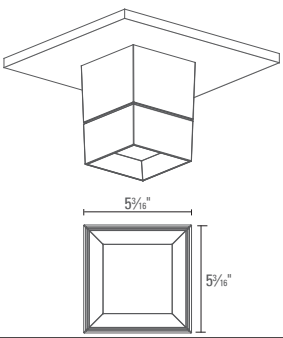

SJ - Surface mount to surface mounted 4"octagonal j-box

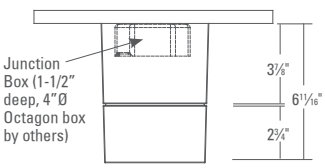

RB - Surface mount to recessed mounted 4"octagonal j-box

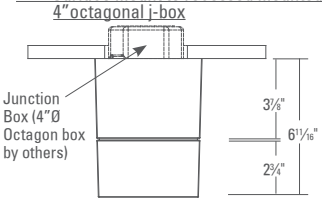

See drawing above for junction-box (by others) details.

usailighting.com
info@usailighting.com
T 845–565–8500
F 845–561–1130
1126 River Road
New Windsor, NY 12553

© 2016. USAI, LLC. All rights reserved.
All designs protected by copyright.
Covered by US Patents: 8,581,520, and 8,456,109.
Patents pending. USAI, BeveLED BLOCK are registered trademarks of USAI, LLC. Revised 05/25/2017

Submitted by Swaney Lighting			
	Job Name: 82 Hanover st - site	**Catalog Number:** BLSD5-09C3-30KS-90-S-WH-CC-UNV-D2 Notes:	**Type:** **A** SLA18-37759

HOW TO SPECIFY

BeveLED BLOCK® Downlight — BLSD5

USAI® Lighting

FAMILY | LED COLOR CHOICES | FIXTURE

BLSD5								
BeveLED Block Downlight	**Wattage Options**	**LED Color Temperature Options**	**Beam Options**	**Lens Options**	**Body Finish Options**	**Mounting Options**	**Voltage Options**	**Dimming Driver Options**
	Classic White							
BLSD5 BeveLED BLOCK 5" Square Downlight	**09C3** 9W LED **12C3** 12W LED **16C3** 16W LED **24C3** 24W LED	**22KS** 2200K, 80+ CRI **27KS** 2700K, 80+ CRI **27KH** 2700K, 90+ CRI **30KS** 3000K, 80+ CRI **30KH** 3000K, 90+ CRI **35KS** 3500K, 80+ CRI **40KS** 4000K, 80+ CRI	**25** 25° beam **50** 50° beam **90** 90° beam	**S** Solite (provided standard) **BF** Borosilicate Frosted	**WH** White **BZ** Statuary Bronze **BL** Black **GR** Metalized Grey **SC** Conduit Silver **RAL** Custom Color (specify RAL #)	**CC** Conduit cutout for surface mounted 4" octagonal junction box **RB** Surface mounted to recessed mounted 4" octagonal junction box **SJ** Surface mounted to surface mounted 4" octagonal junction box	**UNV** 120V-277V	***For use with Universal Voltage 120V - 277V*** **D2** 0-10V dim, 10% (provided standard) **D4** Lutron Hi-Lume 1% 3-wire/ECO (2) **D4E** Lutron 5 ECO, 5% (1, 2) **D4H** Lutron H ECO, 1% Fade (1, 2) **D6A** EldoLED 0-10V, 0.1%, logarithmic/Lutron controls (2) **D6B** EldoLED 0-10V, 0.1%, linear controls (2) **D6E** EldoLED 0-10V, 1%, logarithmic/Lutron controls (2) **D6F** EldoLED 0-10V, 1%, linear controls (2) **D7** EldoLED DALI, 0.1% (2)
	Warm Glow Dimming							
	16WG2 16W LED	**2722KS -** 2700K-2200K, 80+ CRI **2722KH -** 2700K-2200K, 90+ CRI **3022KS -** 3000K-2200K, 80+ CRI **3022KH -** 3000K-2200K, 90+ CRI **3522KS -** 3500K-2200K, 80+ CRI	**30** 30° beam **50** 50° beam **90** 90° beam				**120V**	***For use with 120V only*** **D3** Lutron Hi-Lume 1% 2-wire, 120V only (2) **D19** Phase dimming 1%, 120V only (1, 3)

1 Not available with 9W
2 For use with RB mounting only
3 Not available for Warm Glow

BEVELED BLOCK SPECIFICATIONS

FIELD REPLACEABLE LED LIGHT ENGINE

is serviceable without tools. All USAI Lighting Classic White and Warm Glow Dimming light engines feature industry-leading color consistency

FIELD REPLACEABLE DRIVER

0-10V, 100%-10% solid state electronic constant current D2 dimming driver with a high power factor provided standard and sources 2mA. Other dimming drivers optionally available. D6 and D15 dimming drivers source 2mA. Driver complies with IEEE C62.41 surge protection. Some on-time delay may be experienced depending on control system used.

FIXTURE WEIGHT

BeveLED Block weighs 5 lbs

BODY

5-3/16" x 5-3/16" square die cast aluminum body available in a variety of powder coated paint finishes. Custom colors also available (provide RAL #).

MOUNTING

CC: Conduit cutout mounting fixtures are designed to mount to surface-mounted 4"octagonal junction boxes with surface-mounted conduit connections. CC housings have 4 keyslots, one in each side, and ship with one conduit cutout key and three solid cover keys installed in the housing. 2 additional conduit cutout keys are shipped with the fixture, and the different key types are interchangeable in the field. Please see installation instructions for drawings and more details.

RB: Recessed ceiling 4" octagonal junction box mounting fixtures are designed to mount to a ceiling retaining a recessed 4"octagonal junction box. The sides are solid and have no cutouts, please see drawings and installation instructions for more details.

SJ: Surface mounted 4" octagonal junction box mounting fixtures are designed to mount to a surface-mounted junction box that has electrical supply coming from the plenum (no surface-mounted conduit). The sides are solid and have no cutouts, please see drawings and installation instructions for more details

WARRANTY

Based on IESNA LM80-2008, BeveLED Block has a 50,000 hour rated life at 70% lumen maintenance (L70). USAI Lighting Warranty covers replacement parts for 5 years from date of shipment.

LISTINGS

Dry/Damp/Wet for RB and SJ mounting. CC mounting style is dry/damp only. NRTL/CSA-US tested to UL standards. IBEW union made.

NOTES

- Ambient temperatures at fixture location should not exceed 40°C during normal operation.
- Consult factory for video capture applications.
- For interior use only.

PHOTOMETRICS

Consult factory or website for IES files. Tested in accordance with IESNA LM79. www.usailighting.com/block

usailighting.com
info@usailighting.com
T 845–565–8500
F 845–561–1130
1126 River Road
New Windsor, NY 12553

© 2016. USAI, LLC. All rights reserved.
All designs protected by copyright.
Covered by US Patents: 8,581,520, and 8,456,109.
Patents pending. USAI, BeveLED BLOCK are registered trademarks of USAI, LLC. Revised 05/25/2017

Submitted by Swaney Lighting

Job Name:
82 Hanover st - site

Catalog Number:
TRP1-12L-15-3K7-4-U-DB

Notes:

Type:
EW

SLA18-37759

GEOPAK SERIES SIZE 1 LED

Architectural Wallpack

TRP1/RDI1/QSP1

NEW

Cat.#

Job

Type

HUBBELL Outdoor Lighting

Approvals

SPECIFICATIONS

APPLICATIONS

- Small sized architectural wallpacks in three stylish shapes with molded contours to accentuate building architecture. Provides excellent illumination in energy-saving LED systems.
- Back box accessory available for surface conduit application.

Construction:

- Housing is made from die-cast aluminum with a hinged back-plate for ease of installation and maintenance.
- The LED bezel and trim-plate are made of stainless steel.
- Five powder coat standard finishes, plus custom color options.
- Wet Location Listed to UL924 and UL1598 Standard.

LED:

- 12 high power LEDs delivering up to 3,000 lumens.
- Up to 118 lumens per watt
- Type II, III and IV distributions for a wide variety of applications.
- Zero uplight (U0), dark sky, neighbor friendly

Electrical:

- 120-277 operation, 50/60Hz
- 0-10V dimming driver standard
- 10kA surge protector
- Photocell and occupancy sensor options available for complete on/off and dimming control

Battery Backup:

- Intergral Battery Backup provides emergency lighting for the required 90 minute path of egress.
- Includes a long-life Lithium Iron Phosphate battery with optional battery heater for cold temperature application.
- Utilizes 4 LEDs in emergency mode with 657 lumens. Each of the 4 LEDs in emergency are designed to function independently in the unlikely event of a single LED malfunction
- Spectron® self-testing/self-diagnostic electronics are included standard
- Independent dedicated driver and LED array for battery/emergency mode operation.

Installation:

- Universal plate for mounting to standard 3 1/2" and 4" square electrical boxes. All connections are made from connections at the rear of the unit.
- Optional back-box accessory available for surface conduit application. See BB-Geo accessories.

Listings:

- UL 1598 listed for use in wet locations
- Drivers IP66 and RoHS compliant
- DesignLights Consortium® (DLC) qualified. Please refer to the DLC website for specific product qualifications at www.designlights.org

Warranty:

- For more information visit:

http://www.hubbelloutdoor.com/resources/warranty/

PRODUCT IMAGE(S)

DIMENSIONS

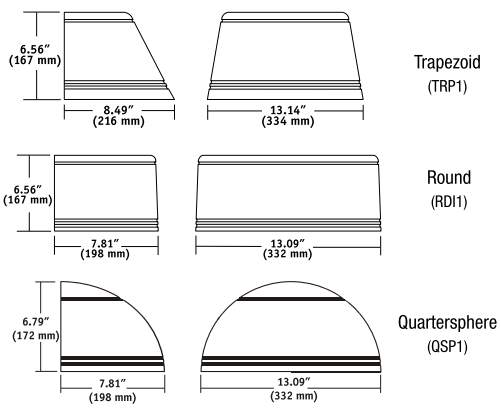

SHIPPING INFORMATION

Catalog Number	Weight (lbs)	Carton Dimensions		
		Length Inch (cm)	Width Inch (cm)	Height Inch (cm)
TRP1	11.5	17.0	9.9	10.0
RDI1	11.5	18.0	11.0	9.25
QSP1	10.5	17.0	9.6	10.5

CERTIFICATIONS/LISTINGS

C US

*3000K and warmer CCTs only

ORDERING INFORMATION

ORDERING EXAMPLE: TRP-12L-20-4K-3-1-BL-SCP-EH

HOUSING	VERSION	WATTAGE	CCT/CRI	DISTRIBUTION	VOLTAGE	FINISH	CONTROL OPTIONS	OPTIONS
TRP1 Trapezoid	12L 12 LEDS	15 15 watts	3K7 3000K, 70CRI	2 Type II	U 120-277	BL Black	PCU Button Photocell	F[4] Fusing (only available with STD fixture configuration, 120-277V only)
RDI1 Radius		20 20 watts	4K7 4000K, 70CRI	3 Type III	1 120	DB Bronze	SCP[2,3] Programmable Motion Sensor	E[1] Battery Pack (0˚C)
QSP1 Quartersphere		30 30 watts	5K7 5000K, 70CRI	4 Type IV	2 208	GR Gray	SPECIFY SCP HEIGHT	EH[1] Battery Pack (-30˚C) with heater
					3 240	PS Platinum	8F Up to 8ft mount height	
					4 277	WH White	20F Up to 20ft mount height	
						CC Custom		

[1] Voltage specific (120 or 277V only)
[2] Must order minimum of one remote control to program dimming settings, 0-10V fully adjustable dimming with automatic daylight calibration and different time delay settings, 120-277V only
[3] PCU option not applicable, included in sensor
[4] Must specify input voltage (120, 208, 240 or 277)

HUBBELL Outdoor Lighting

Hubbell Outdoor Lighting • 701 Millennium Boulevard • Greenville, SC 29607 • Phone: 864-678-1000

Due to our continued efforts to improve our products, product specifications are subject to change without notice.

© 2016 HUBBELL OUTDOOR LIGHTING, All Rights Reserved • For more information visit our website: **www.hubbelloutdoor.com** • Printed in USA

TRP1/RDI1/QSP1-SPEC
JANUARY 29, 2018 10:52 AM

Submitted by Swaney Lighting			
	Job Name: 82 Hanover st - site	**Catalog Number:** TRP1-12L-15-3K7-4-U-DB Notes:	**Type:** **EW** SLA18-37759

ACCESSORIES - Order separately

Catalog Number	Description
SCP-REMOTE[2]	Remote control for SCP option. Order at least one per project to program and control.
BB-GEO-XX	Back box with 4 - 1/2" threaded conduit holes, specify finish by replacing "XX" with finish selection, eg. Dark Bronze "DB"

[2] Must order minimum of one remote control to program dimming settings, 0-10V fully adjustable dimming with automatic daylight calibration and different time delay settings, 120V-277V only

BB-GEO-XX – Mounted to luminaire

BB-GEO-XX

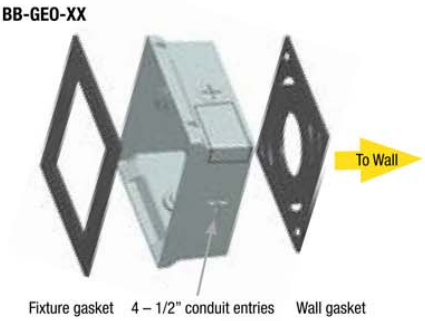

PERFORMANCE DATA (AC/Standard Configurations)

				5K (5000K nominal, 70 CRI)					4K (4000K nominal, 70 CRI)					3K (3000K nominal, 70 CRI)				
# OF LEDS	DRIVE CURRENT	SYSTEM WATTS	DIST. TYPE	LUMENS	LPW[1]	B	U	G	LUMENS	LPW[1]	B	U	G	LUMENS	LPW[1]	B	U	G
12	350mA	13.9	2	1635	118	1	1	1	1577	113	1	1	1	1497	108	1	1	1
			3	1613	116	1	0	1	1556	112	1	0	1	1477	106	1	0	1
			4	1607	116	0	0	1	1550	111	0	0	1	1471	106	0	0	1
	500mA	19.9	2	2268	114	1	1	1	2176	109	1	1	1	2077	104	1	1	1
			3	2245	113	1	0	1	2140	108	1	0	1	2049	103	1	0	1
			4	2229	112	0	0	1	2150	108	0	0	1	2041	103	0	0	1
	700mA	28.2	2	2942	104	1	1	1	2885	102	1	1	2	2721	96	1	1	1
			3	2912	103	1	0	1	2836	101	1	0	1	2685	95	1	0	1
			4	2892	103	1	0	1	2789	99	1	0	1	2674	95	1	0	1

Electrical Data

Input Power Consumption

Drive Current (mA)	Input Voltage (V)	System Power (w)	Current (Amps)
350mA	120	13.9	0.12
	277		0.05
500mA	120	19.9	0.17
	277		0.07
700mA	120	28.2	0.24
	277		0.10

Battery backup units consume additional power during charging (maximum 32.2 watts for E, 50.7 watts for EH)

Projected Lumen Maintenance

Ambient Temp.	Operating Hours 0	25,000	50,000	TM-21-11[1] 60,000	100,000	L70 (hours)
25°C/77°F	1.00	0.98	0.97	0.95	0.91	>345,000
40°C/104°F	1.00	0.96	0.95	0.92	0.87	>268,000

LUMINAIRE AMBIENT TEMPERATURE FACTOR (LATF)

AMBIENT TEMPERATURE		LUMEN MULTIPLIER
0° C	32° F	1.02
10° C	50° F	1.01
20° C	68° F	1.00
25° C	77° F	1.00
30° C	86° F	1.00
40° C	104° F	0.99
50° C	122° F	0.98

Use these factors to determine relative lumen output for average ambient temperatures from 0-40°C (32-104°F).

PHOTOMETRIC REPORTS
(30w, 4000K shown)

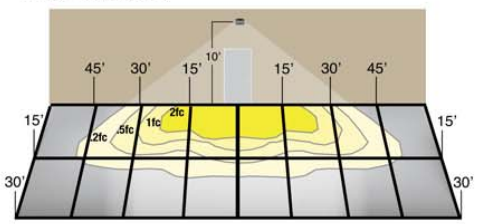

TYPE II

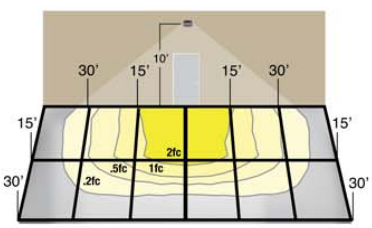

TYPE III

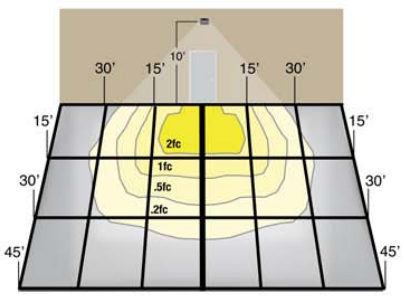

TYPE IV (Forward throw)

© 2016 HUBBELL OUTDOOR LIGHTING, All Rights Reserved • For more information visit our website: **www.hubbelloutdoor.com** • Printed in USA

Submitted by Swaney Lighting			
	Job Name: 82 Hanover st - site	**Catalog Number:** TRP1-12L-15-3K7-4-U-DB Notes:	**Type:** **EW** SLA18-37759

GeoPak - Battery Back Up

Functional Circuitry: Transient surge protection device on AC input. Upon failure of the normal utility power, an LED driver is automatically activated to power the emergency LEDs. Upon resumption of normal utility power, the LED driver is turned off, and the battery is recharged through a micro-controller based 3-stage charger. The battery is a maintenance-free Lithium Iron Phosphate (LiFePo) type. A low voltage battery disconnect (LVD) feature protects the battery from severe damage during prolonged power failures. Manual testing is available at any time using the push-to-test button. The optional heater features a heating wrap and thermostat to maintain optimal battery temperature during charge or discharge. The GeoPak includes the following features:

- Battery re-charge within 24 hours
- AC Lock-out circuit
- Self-diagnostics monitors LED status, LED driver circuit, battery capacity and charger function and displays any fault detection by means of a flashing code.
- Self-Test feature runs a 1 minute test once a month and an alternating 30 or 60 minute test once every 6 months. Multi-color LED indicator provides visible fault detection and charging status.
- User initiated 1, or 90-minute system test feature
- 15 minute re-transfer delay
- Automatic unit transfer in brown-out conditions (below 80% of nominal AC input voltage).

Emergency Photometric Performance (1 fc average .1 fc minimum)

28' multi-unit spacing at 10' MH with 0/30/10 reflectances on a 6' path

26' x 10' single unit coverage at 10' MH with 0/30/10 reflectances

6' x 19' forward throw coverage at 10' MH with 0/30/10 reflectances

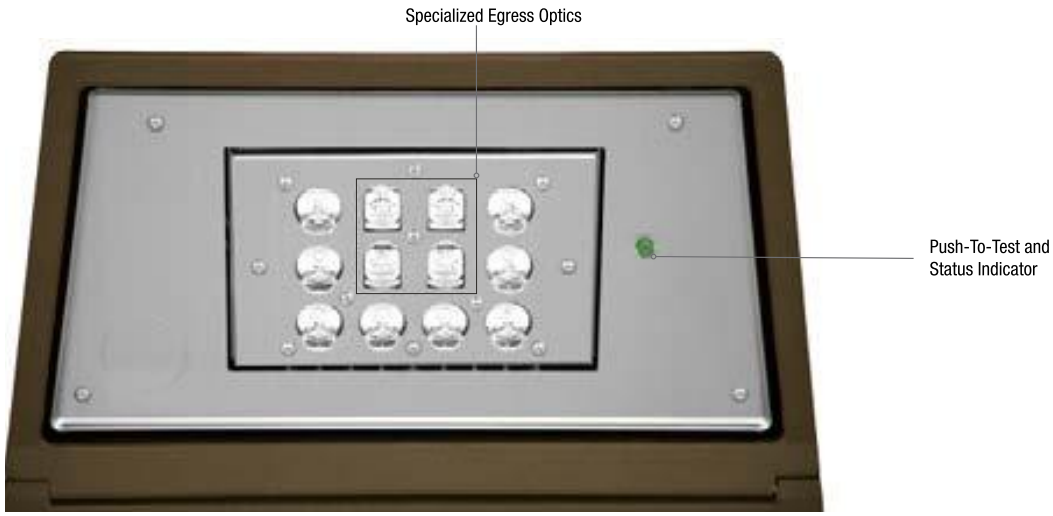

Normal Mode

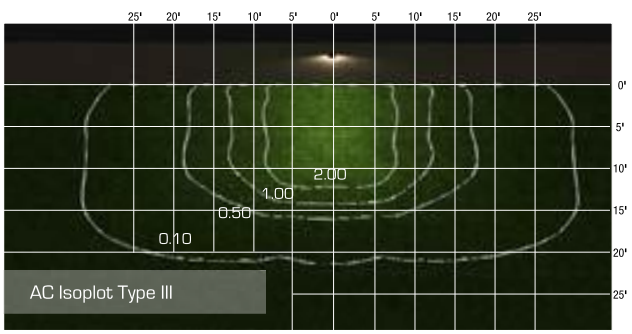

Emergency Mode

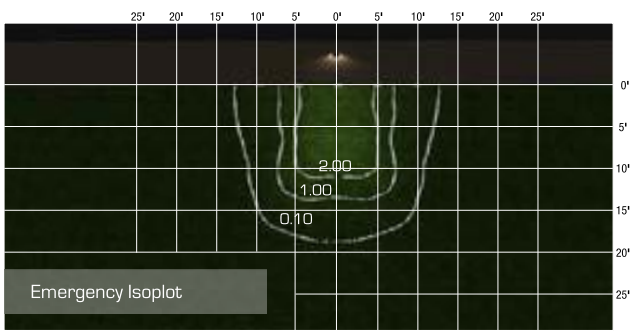

Provides Life Safety Code average illuminance of 1.0 fc. Assumes open space with no obstructions.

Diagrams for illustration purposes only, please consult factory for application layout.

© 2016 HUBBELL OUTDOOR LIGHTING, All Rights Reserved • For more information visit our website: **www.hubbelloutdoor.com** • Printed in USA

Submitted by Swaney Lighting

Job Name:
82 Hanover st - site

Catalog Number:
TRP1-12L-15-3K7-3-U-DB

Notes:

Type:
W3

SLA18-37759

GEOPAK SERIES SIZE 1 LED

Architectural Wallpack

TRP1/RDI1/QSP1

NEW

Cat.#

Job

Type

HUBBELL Outdoor Lighting

Approvals

SPECIFICATIONS

APPLICATIONS

- Small sized architectural wallpacks in three stylish shapes with molded contours to accentuate building architecture. Provides excellent illumination in energy-saving LED systems.
- Back box accessory available for surface conduit application.

Construction:

- Housing is made from die-cast aluminum with a hinged back-plate for ease of installation and maintenance.
- The LED bezel and trim-plate are made of stainless steel.
- Five powder coat standard finishes, plus custom color options.
- Wet Location Listed to UL924 and UL1598 Standard.

LED:

- 12 high power LEDs delivering up to 3,000 lumens.
- Up to 118 lumens per watt
- Type II, III and IV distributions for a wide variety of applications.
- Zero uplight (U0), dark sky, neighbor friendly

Electrical:

- 120-277 operation, 50/60Hz
- 0-10V dimming driver standard
- 10kA surge protector
- Photocell and occupancy sensor options available for complete on/off and dimming control

Battery Backup:

- Intergral Battery Backup provides emergency lighting for the required 90 minute path of egress.
- Includes a long-life Lithium Iron Phosphate battery with optional battery heater for cold temperature application.
- Utilizes 4 LEDs in emergency mode with 657 lumens. Each of the 4 LEDs in emergency are designed to function independently in the unlikely event of a single LED malfunction
- Spectron® self-testing/self-diagnostic electronics are included standard
- Independent dedicated driver and LED array for battery/emergency mode operation.

Installation:

- Universal plate for mounting to standard 3 1/2" and 4" square electrical boxes. All connections are made from connections at the rear of the unit.
- Optional back-box accessory available for surface conduit application. See BB-Geo accessories.

Listings:

- UL 1598 listed for use in wet locations
- Drivers IP66 and RoHS compliant
- DesignLights Consortium® (DLC) qualified. Please refer to the DLC website for specific product qualifications at www.designlights.org

Warranty:

- For more information visit:

http://www.hubbelloutdoor.com/resources/warranty/

PRODUCT IMAGE(S)

DIMENSIONS

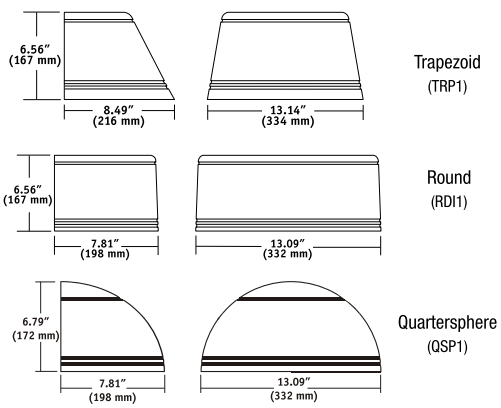

SHIPPING INFORMATION

Catalog Number	Weight (lbs)	Carton Dimensions		
		Length Inch (cm)	Width Inch (cm)	Height Inch (cm)
TRP1	11.5	17.0	9.9	10.0
RDI1	11.5	18.0	11.0	9.25
QSP1	10.5	17.0	9.6	10.5

CERTIFICATIONS/LISTINGS

C US

*3000K and warmer CCTs only

ORDERING INFORMATION

ORDERING EXAMPLE: TRP-12L-20-4K-3-1-BL-SCP-EH

HOUSING	VERSION	WATTAGE	CCT/CRI	DISTRIBUTION	VOLTAGE	FINISH	CONTROL OPTIONS	OPTIONS
TRP1 Trapezoid	12L 12 LEDS	15 15 watts	3K7 3000K, 70CRI	2 Type II	U 120-277	BL Black	PCU Button Photocell	F[4] Fusing (only available with STD fixture configuration, 120-277V only)
RDI1 Radius		20 20 watts	4K7 4000K, 70CRI	3 Type III	1 120	DB Bronze	SCP[2,3] Programmable Motion Sensor	E[1] Battery Pack (0˚C)
QSP1 Quartersphere		30 30 watts	5K7 5000K, 70CRI	4 Type IV	2 208	GR Gray	SPECIFY SCP HEIGHT	EH[1] Battery Pack (-30˚C) with heater
					3 240	PS Platinum	8F Up to 8ft mount height	
					4 277	WH White	20F Up to 20ft mount height	
						CC Custom		

[1] Voltage specific (120 or 277V only)
[2] Must order minimum of one remote control to program dimming settings, 0-10V fully adjustable dimming with automatic daylight calibration and different time delay settings, 120-277V only
[3] PCU option not applicable, included in sensor
[4] Must specify input voltage (120, 208, 240 or 277)

HUBBELL Outdoor Lighting

Hubbell Outdoor Lighting • 701 Millennium Boulevard • Greenville, SC 29607 • Phone: 864-678-1000

Due to our continued efforts to improve our products, product specifications are subject to change without notice.

© 2016 HUBBELL OUTDOOR LIGHTING, All Rights Reserved • For more information visit our website: **www.hubbelloutdoor.com** • Printed in USA

TRP1/RDI1/QSP1-SPEC
JANUARY 29, 2018 10:52 AM

Submitted by Swaney Lighting			
	Job Name: 82 Hanover st - site	**Catalog Number:** TRP1-12L-15-3K7-3-U-DB Notes:	**Type:** **W3** SLA18-37759

ACCESSORIES - Order separately

Catalog Number	Description
SCP-REMOTE[2]	Remote control for SCP option. Order at least one per project to program and control.
BB-GEO-XX	Back box with 4 - 1/2" threaded conduit holes, specify finish by replacing "XX" with finish selection, eg. Dark Bronze "DB"

[2] Must order minimum of one remote control to program dimming settings, 0-10V fully adjustable dimming with automatic daylight calibration and different time delay settings, 120V-277V only

BB-GEO-XX – Mounted to luminaire

BB-GEO-XX

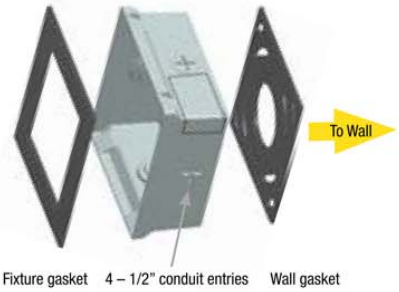

PERFORMANCE DATA (AC/Standard Configurations)

				5K (5000K nominal, 70 CRI)					4K (4000K nominal, 70 CRI)					3K (3000K nominal, 70 CRI)				
# OF LEDS	DRIVE CURRENT	SYSTEM WATTS	DIST. TYPE	LUMENS	LPW[1]	B	U	G	LUMENS	LPW[1]	B	U	G	LUMENS	LPW[1]	B	U	G
12	350mA	13.9	2	1635	118	1	1	1	1577	113	1	1	1	1497	108	1	1	1
			3	1613	116	1	0	1	1556	112	1	0	1	1477	106	1	0	1
			4	1607	116	0	0	1	1550	111	0	0	1	1471	106	0	0	1
	500mA	19.9	2	2268	114	1	1	1	2176	109	1	1	1	2077	104	1	1	1
			3	2245	113	1	0	1	2140	108	1	0	1	2049	103	1	0	1
			4	2229	112	0	0	1	2150	108	0	0	1	2041	103	0	0	1
	700mA	28.2	2	2942	104	1	1	1	2885	102	1	1	2	2721	96	1	1	1
			3	2912	103	1	0	1	2836	101	1	0	1	2685	95	1	0	1
			4	2892	103	1	0	1	2789	99	1	0	1	2674	95	1	0	1

Electrical Data

Input Power Consumption

Drive Current (mA)	Input Voltage (V)	System Power (w)	Current (Amps)
350mA	120	13.9	0.12
	277		0.05
500mA	120	19.9	0.17
	277		0.07
700mA	120	28.2	0.24
	277		0.10

Battery backup units consume additional power during charging (maximum 32.2 watts for E, 50.7 watts for EH)

Projected Lumen Maintenance

Ambient Temp.	Operating Hours 0	25,000	50,000	TM-21-11[1] 60,000	100,000	L70 (hours)
25°C/77°F	1.00	0.98	0.97	0.95	0.91	>345,000
40°C/104°F	1.00	0.96	0.95	0.92	0.87	>268,000

LUMINAIRE AMBIENT TEMPERATURE FACTOR (LATF)

AMBIENT TEMPERATURE		LUMEN MULTIPLIER
0° C	32° F	1.02
10° C	50° F	1.01
20° C	68° F	1.00
25° C	77° F	1.00
30° C	86° F	1.00
40° C	104° F	0.99
50° C	122° F	0.98

Use these factors to determine relative lumen output for average ambient temperatures from 0-40°C (32-104°F).

PHOTOMETRIC REPORTS
(30w, 4000K shown)

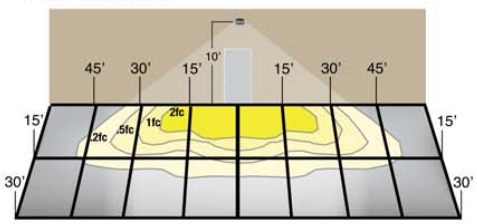

TYPE II

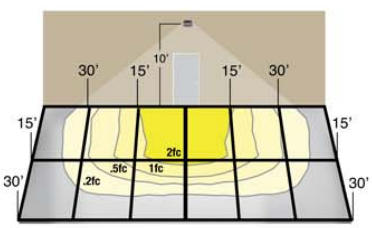

TYPE III

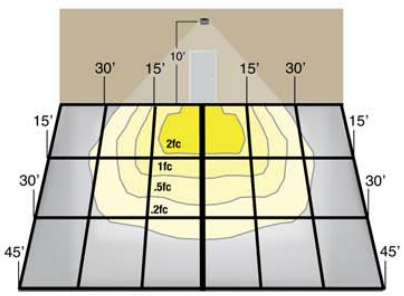

TYPE IV (Forward throw)

© 2016 HUBBELL OUTDOOR LIGHTING, All Rights Reserved • For more information visit our website: **www.hubbelloutdoor.com** • Printed in USA

GeoPak - Battery Back Up

Functional Circuitry: Transient surge protection device on AC input. Upon failure of the normal utility power, an LED driver is automatically activated to power the emergency LEDs. Upon resumption of normal utility power, the LED driver is turned off, and the battery is recharged through a micro-controller based 3-stage charger. The battery is a maintenance-free Lithium Iron Phosphate (LiFePo) type. A low voltage battery disconnect (LVD) feature protects the battery from severe damage during prolonged power failures. Manual testing is available at any time using the push-to-test button. The optional heater features a heating wrap and thermostat to maintain optimal battery temperature during charge or discharge. The GeoPak includes the following features:

- Battery re-charge within 24 hours
- AC Lock-out circuit
- Self-diagnostics monitors LED status, LED driver circuit, battery capacity and charger function and displays any fault detection by means of a flashing code.
- Self-Test feature runs a 1 minute test once a month and an alternating 30 or 60 minute test once every 6 months. Multi-color LED indicator provides visible fault detection and charging status.
- User initiated 1, or 90-minute system test feature
- 15 minute re-transfer delay
- Automatic unit transfer in brown-out conditions (below 80% of nominal AC input voltage).

Emergency Photometric Performance (1 fc average .1 fc minimum)

28' multi-unit spacing at 10' MH with 0/30/10 reflectances on a 6' path

26' x 10' single unit coverage at 10' MH with 0/30/10 reflectances

6' x 19' forward throw coverage at 10' MH with 0/30/10 reflectances

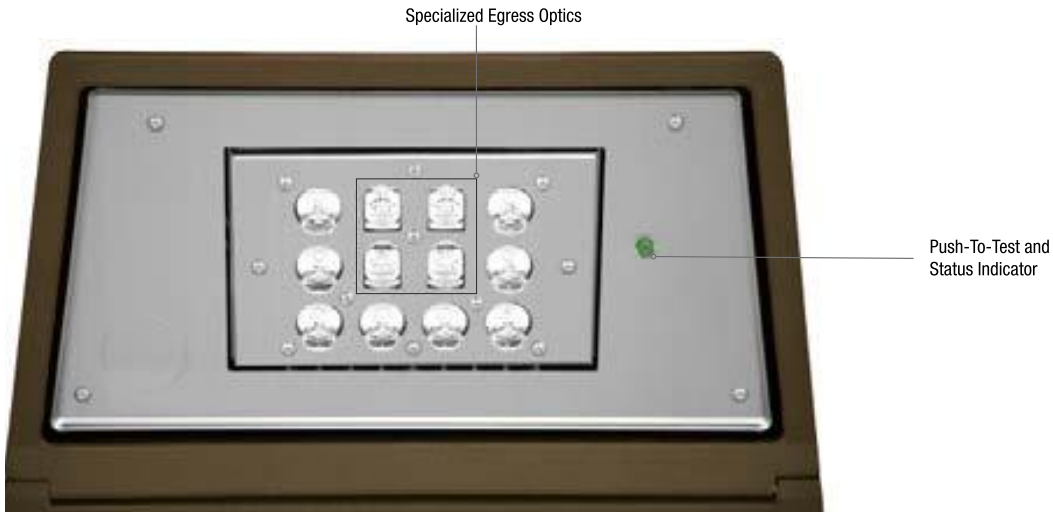

Normal Mode

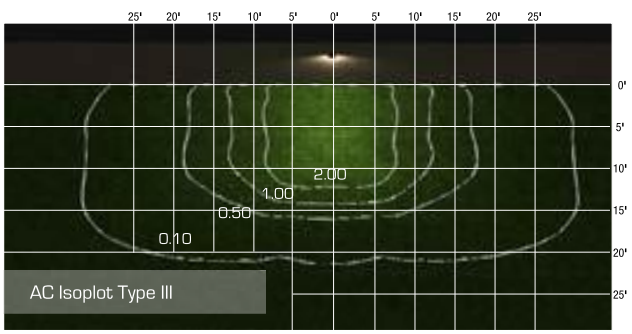

Emergency Mode

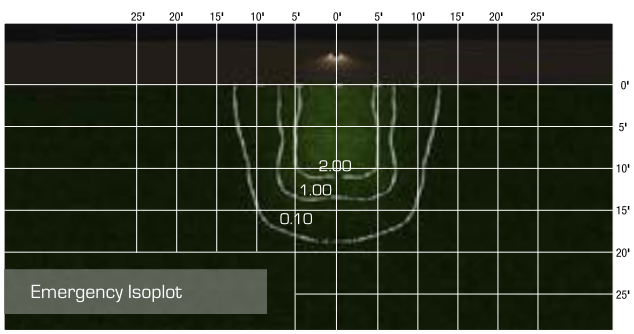

Provides Life Safety Code average illuminance of 1.0 fc. Assumes open space with no obstructions.

Diagrams for illustration purposes only, please consult factory for application layout.

© 2016 HUBBELL OUTDOOR LIGHTING, All Rights Reserved • For more information visit our website: **www.hubbelloutdoor.com** • Printed in USA

BeveLED® BLOCK

Installation Instructions

CAUTION READ BEFORE INSTALLATION

IMPORTANT

READ CAREFULLY BEFORE INSTALLING FIXTURE. RETAIN THESE INSTRUCTIONS FOR FUTURE REFERENCE.

THIS PRODUCT MUST BE INSTALLED BY A PERSON FAMILIAR WITH THE CONSTRUCTION AND OPERATION OF THE PRODUCT AND THE HAZARDS INVOLVED, IN ACCORDANCE WITH THE APPLICABLE NEC CODE.

- **Switch off main power before installation or maintaining fixture.**
- **Fixtures must be installed in applications where the ambient temperature does not exceed 40°C during normal operation.**
- **DO NOT connect or disconnect LED board wire connector when fixture is energized, as this may result in permanent damage to the LED array.**
- **We will not accept any warranty claims if incorrect driver or light engine is used.**

CC Mounting
Conduit Cutout

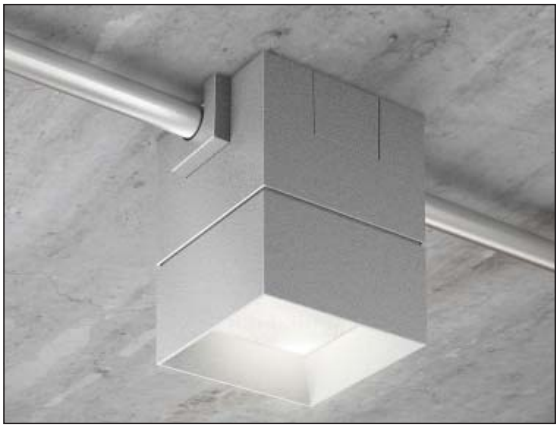

RB or SJ Mounting
Ceiling / Surface

BLOCK mounts to a standard 4" octagonal junction box (by others)

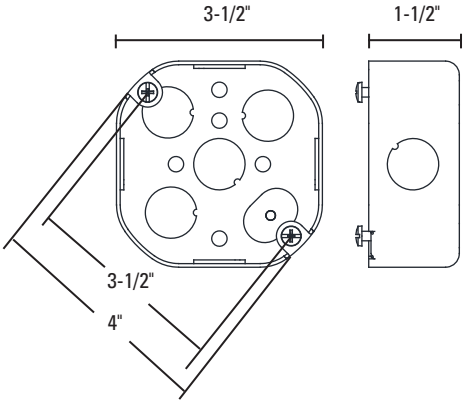

3-1/2" X 1-1/2" DEEP
OCTAGON J-BOX (BY OTHERS)

USAI® Lighting

www.usailighting.com
info@usailighting.com

1126 River Road
New Windsor, NY 12553

T 845–565–8500
F 845–561–1130

©2016. USAI, LLC.
All rights reserved.
All designs protected by copyright.

I2-330 Revised 01/03/2017

BeveLED® BLOCK

Installation Instructions: SJ and RB Mounting

CAUTION READ BEFORE INSTALLATION

IMPORTANT

READ CAREFULLY BEFORE INSTALLING FIXTURE. RETAIN THESE INSTRUCTIONS FOR FUTURE REFERENCE.

THIS PRODUCT MUST BE INSTALLED BY A PERSON FAMILIAR WITH THE CONSTRUCTION AND OPERATION OF THE PRODUCT AND THE HAZARDS INVOLVED, IN ACCORDANCE WITH THE APPLICABLE NEC CODE.

- **Switch off main power before installation or maintaining fixture.**
- **Fixtures must be installed in applications where the ambient temperature does not exceed 40°C during normal operation.**
- **DO NOT connect or disconnect LED board wire connector when fixture is energized, as this may result in permanent damage to the LED array.**
- **We will not accept any warranty claims if incorrect driver or light engine is used.**

SURFACE J-BOX MOUNT SJ

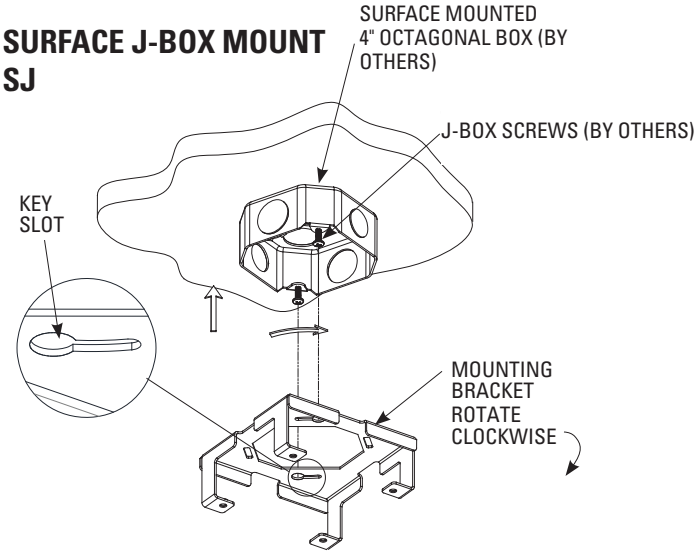

1. Attach mounting bracket to junction box (by others) by aligning key slots to junction box screws and rotating clockwise. Tighten junction box screws.

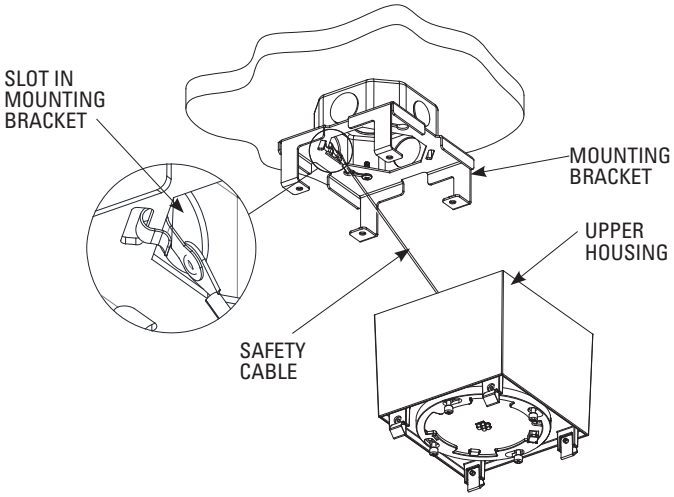

RECESSED J-BOX MOUNT RB

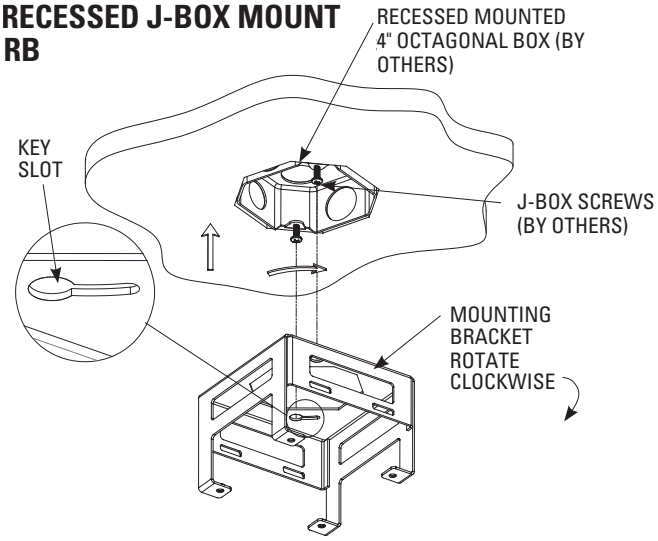

1. Attach mounting bracket to junction box (by others) by aligning key slots to junction box screws and rotating clockwise. Tighten junction box screws.

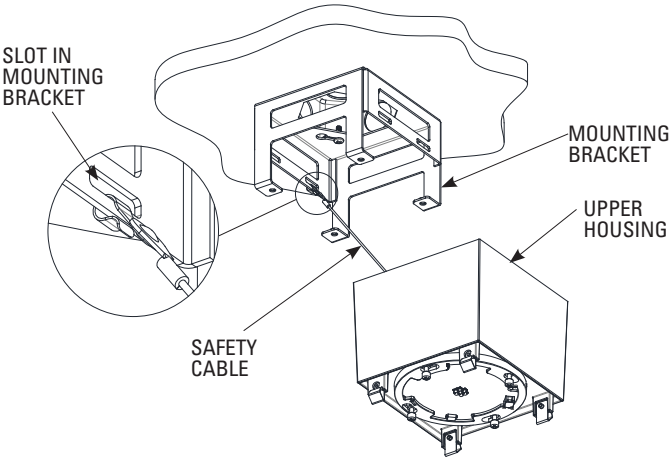

2. Attach safety cable form upper housing to slot in mounting bracket.
   NOTE: Safety cable must be attached to mounting bracket before making wire connections!

USAI® Lighting

www.usailighting.com
info@usailighting.com

1126 River Road
New Windsor, NY 12553

T 845–565–8500
F 845–561–1130

©2016. USAI, LLC.
All rights reserved.
All designs protected by copyright.

I2-330 Revised 01/03/2017

BeveLED® BLOCK

Installation Instructions: SJ and RB Mounting

CAUTION READ BEFORE INSTALLATION

IMPORTANT

READ CAREFULLY BEFORE INSTALLING FIXTURE. RETAIN THESE INSTRUCTIONS FOR FUTURE REFERENCE.

THIS PRODUCT MUST BE INSTALLED BY A PERSON FAMILIAR WITH THE CONSTRUCTION AND OPERATION OF THE PRODUCT AND THE HAZARDS INVOLVED, IN ACCORDANCE WITH THE APPLICABLE NEC CODE.

- **Switch off main power before installation or maintaining fixture.**
- **Fixtures must be installed in applications where the ambient temperature does not exceed 40°C during normal operation.**
- **DO NOT connect or disconnect LED board wire connector when fixture is energized, as this may result in permanent damage to the LED array.**
- **We will not accept any warranty claims if incorrect driver or light engine is used.**

SJ mounting (continued)

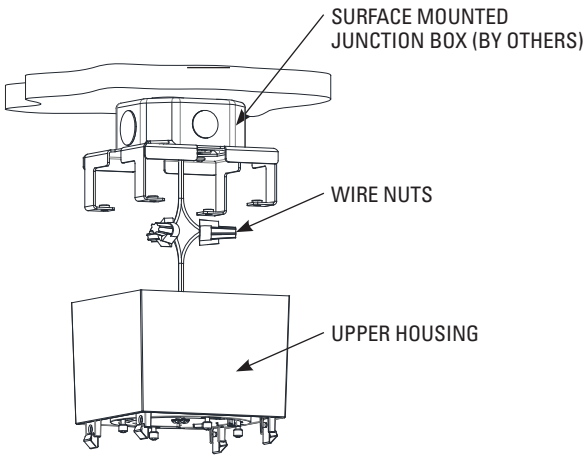

RB mounting (continued)

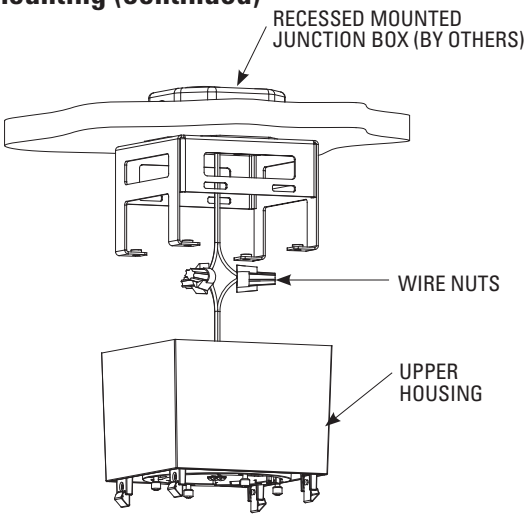

3. Make wire connection with wire-nuts (by others). Push wire nuts into junction box.

SJ / RB Mounting

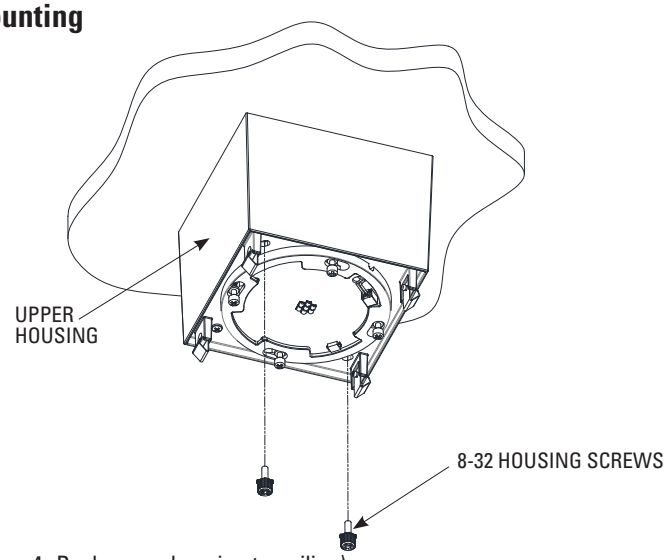

4. Push upper housing to ceiling).
   Once in place, use (2) #8-32 housing screws supplied to attach to mounting bracket. Be sure to tighten screws before moving on to next step.

USAI® Lighting

www.usailighting.com
info@usailighting.com

1126 River Road
New Windsor, NY 12553

T 845–565–8500
F 845–561–1130

©2016. USAI, LLC.
All rights reserved.
All designs protected by copyright.

I2-330 Revised 01/03/2017

BeveLED® BLOCK

Installation Instructions: SJ and RB Mounting

CAUTION READ BEFORE INSTALLATION

IMPORTANT

READ CAREFULLY BEFORE INSTALLING FIXTURE. RETAIN THESE INSTRUCTIONS FOR FUTURE REFERENCE.

THIS PRODUCT MUST BE INSTALLED BY A PERSON FAMILIAR WITH THE CONSTRUCTION AND OPERATION OF THE PRODUCT AND THE HAZARDS INVOLVED, IN ACCORDANCE WITH THE APPLICABLE NEC CODE.

- **Switch off main power before installation or maintaining fixture.**
- **Fixtures must be installed in applications where the ambient temperature does not exceed 40°C during normal operation.**
- **DO NOT connect or disconnect LED board wire connector when fixture is energized, as this may result in permanent damage to the LED array.**
- **We will not accept any warranty claims if incorrect driver or light engine is used.**

SJ / RB Mounting (continued)

Downlight

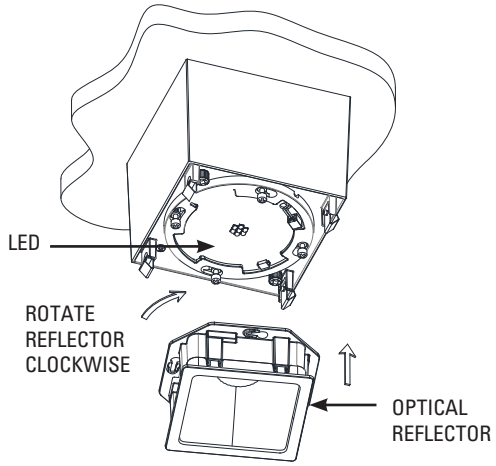

5. Attach optical reflector over LED and secure by rotating clockwise into place.

Wall Wash

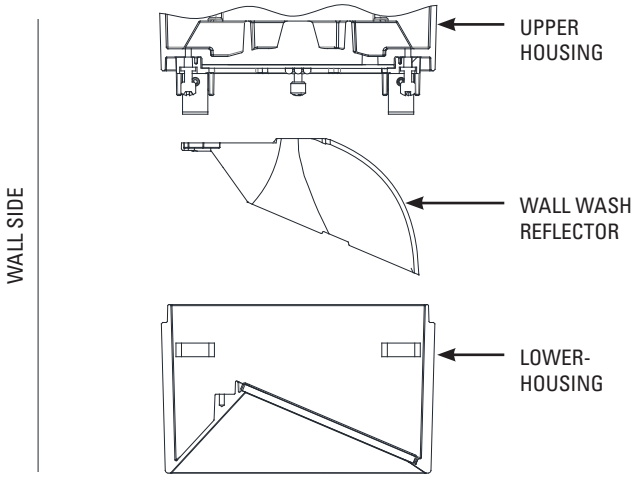

5. Orient the wall wash reflector as shown towards wall.
   Attach optical reflector over LED and secure by pulling reflector into place.
   Orient the trim as shown over reflector and snap into place.

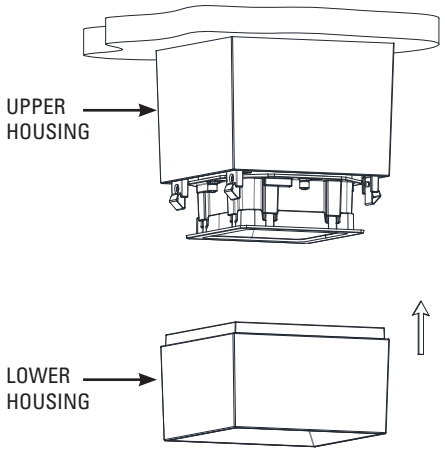

6. Snap lower housing into upper housing.

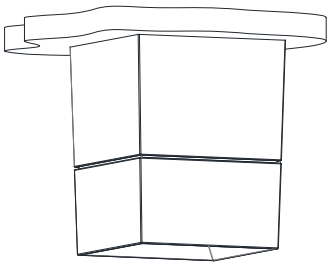

7. Assembled BLOCK for SJ Surface J-Box Mount and RB recessed junction box mount should look like the above

USAI® Lighting

www.usailighting.com
info@usailighting.com

1126 River Road
New Windsor, NY 12553

T 845–565–8500
F 845–561–1130

©2016. USAI, LLC.
All rights reserved.
All designs protected by copyright.

I2-330 Revised 01/03/2017

BeveLED® BLOCK

Installation Instructions: CC Conduit Cutout Mounting

CAUTION READ BEFORE INSTALLATION

IMPORTANT
READ CAREFULLY BEFORE INSTALLING FIXTURE. RETAIN THESE INSTRUCTIONS FOR FUTURE REFERENCE.
THIS PRODUCT MUST BE INSTALLED BY A PERSON FAMILIAR WITH THE CONSTRUCTION AND OPERATION OF THE PRODUCT AND THE HAZARDS INVOLVED, IN ACCORDANCE WITH THE APPLICABLE NEC CODE.

- **Switch off main power before installation or maintaining fixture.**
- **Fixtures must be installed in applications where the ambient temperature does not exceed 40°C during normal operation.**
- **DO NOT connect or disconnect LED board wire connector when fixture is energized, as this may result in permanent damage to the LED array.**
- **We will not accept any warranty claims if incorrect driver or light engine is used.**

INSTALLING CONDUIT CUTOUT KEYS

BLOCK CC style is shipped with (1) conduit cutout key and (3) solid cover keys installed. Revise BLOCK configuration for your project with these steps.

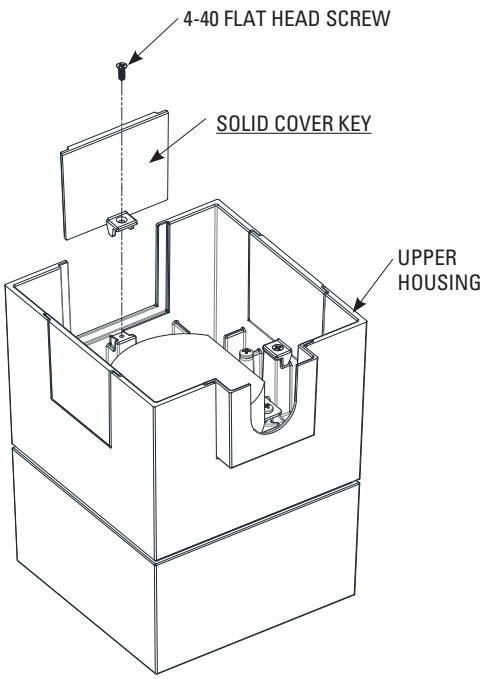

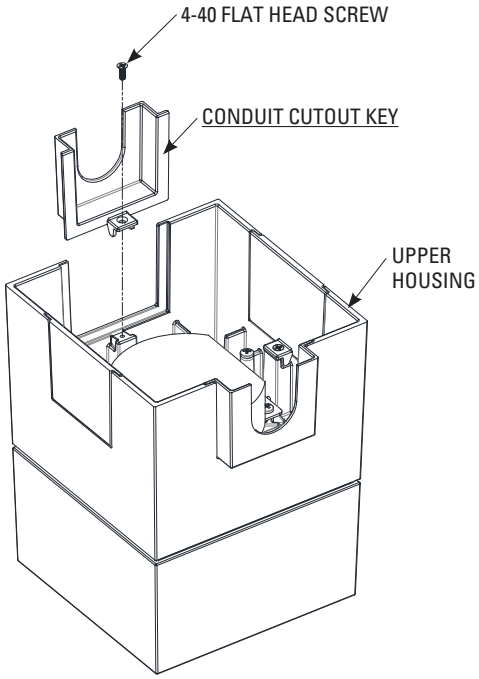

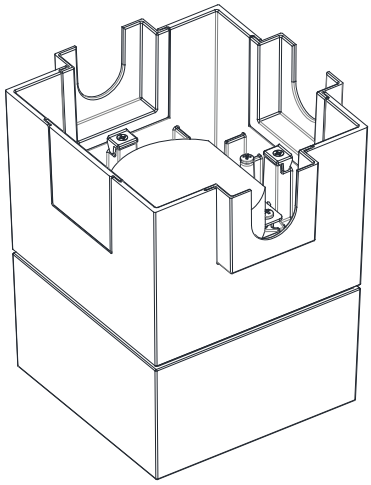

1. Determine what sides need to have conduit cutout keys based off of ceiling conduit layout.
2. Remove 4-40 flat head screws that are holding in the solid cover key that needs to be removed. Remove solid cover key and remove.
3. Attach conduit key where solid cover key was removed using 4-40 flat head screw.
4. Repeat steps 1-2 for all sides that need to have conduit cutout keys.

USAI® Lighting
www.usailighting.com
info@usailighting.com
1126 River Road
New Windsor, NY 12553
T 845–565–8500
F 845–561–1130

©2016. USAI, LLC.
All rights reserved.
All designs protected by copyright.
I2-330 Revised 01/03/2017

BeveLED® BLOCK

Installation Instructions: CC Conduit Cutout Mounting

CAUTION READ BEFORE INSTALLATION

IMPORTANT

READ CAREFULLY BEFORE INSTALLING FIXTURE. RETAIN THESE INSTRUCTIONS FOR FUTURE REFERENCE.

THIS PRODUCT MUST BE INSTALLED BY A PERSON FAMILIAR WITH THE CONSTRUCTION AND OPERATION OF THE PRODUCT AND THE HAZARDS INVOLVED, IN ACCORDANCE WITH THE APPLICABLE NEC CODE.

- **Switch off main power before installation or maintaining fixture.**
- **Fixtures must be installed in applications where the ambient temperature does not exceed 40°C during normal operation.**
- **DO NOT connect or disconnect LED board wire connector when fixture is energized, as this may result in permanent damage to the LED array.**
- **We will not accept any warranty claims if incorrect driver or light engine is used.**

CONDUIT CUTOUT

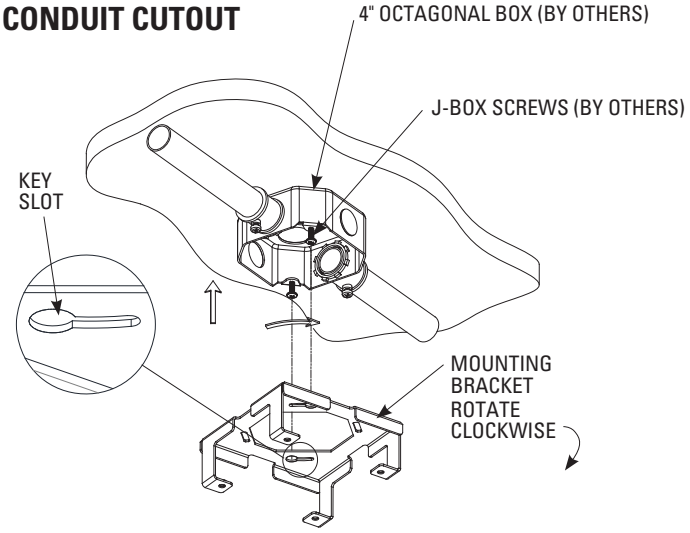

1. Attach mounting bracket to junction box (by others) by aligning key slots to junction box screws and rotating clockwise. Tighten junction box screws.

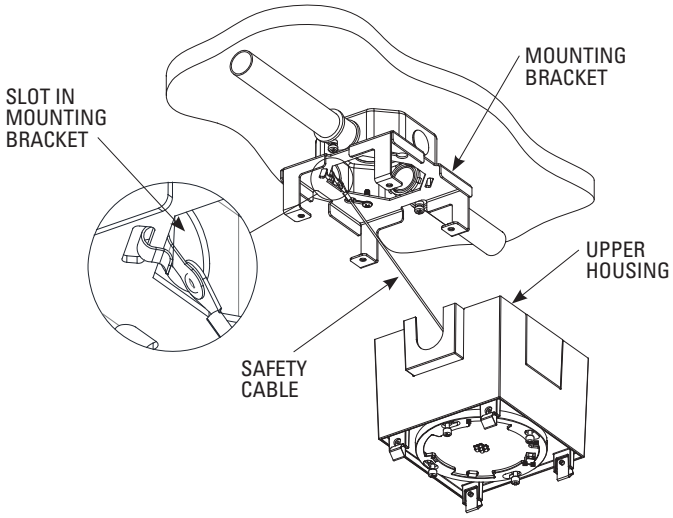

2. Attach safety cable from upper housing to slot in mounting bracket.

   NOTE: Safety cable must be attached to mounting bracket before making wire connections!

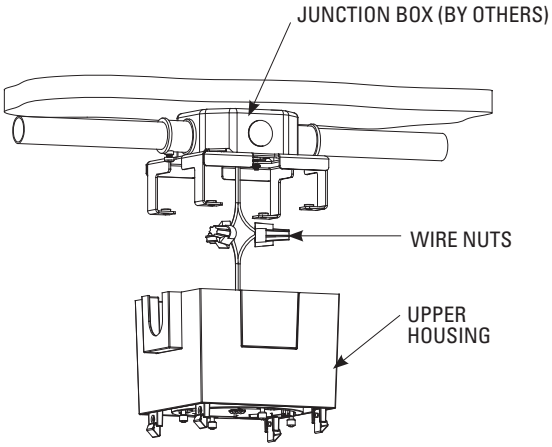

3. Make wire connection with wire-nuts (by others). Push wire-nuts into junction box.

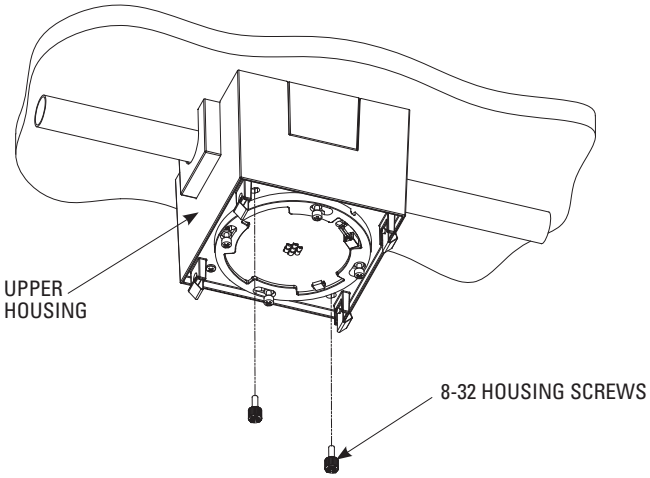

4. Push upper housing to ceiling making sure to have the conduit covers slide over 1/2" or 3/4" conduit (by others). Once in place, use (2) #8-32 housing screws supplied to attach to mounting bracket. Be sure to tighten screws before moving on to next step.

USAI® Lighting

www.usailighting.com
info@usailighting.com

1126 River Road
New Windsor, NY 12553

T 845–565–8500
F 845–561–1130

©2016. USAI, LLC.
All rights reserved.
All designs protected by copyright.

I2-330 Revised 01/03/2017

BeveLED® BLOCK

Installation Instructions: CC Conduit Cutout Mounting

CAUTION READ BEFORE INSTALLATION

IMPORTANT
READ CAREFULLY BEFORE INSTALLING FIXTURE. RETAIN THESE INSTRUCTIONS FOR FUTURE REFERENCE.
THIS PRODUCT MUST BE INSTALLED BY A PERSON FAMILIAR WITH THE CONSTRUCTION AND OPERATION OF THE PRODUCT AND THE HAZARDS INVOLVED, IN ACCORDANCE WITH THE APPLICABLE NEC CODE.

- **Switch off main power before installation or maintaining fixture.**
- **Fixtures must be installed in applications where the ambient temperature does not exceed 40°C during normal operation.**
- **DO NOT connect or disconnect LED board wire connector when fixture is energized, as this may result in permanent damage to the LED array.**
- **We will not accept any warranty claims if incorrect driver or light engine is used.**

CONDUIT CUTOUT (continued)

Downlight

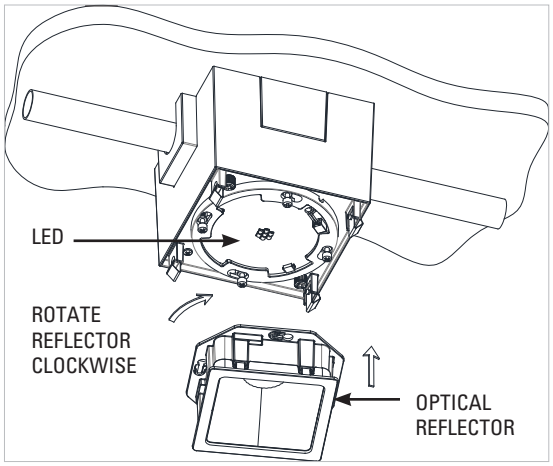

5. Attach optical reflector over LED and secure by rotating clockwise into place.

Wall Wash

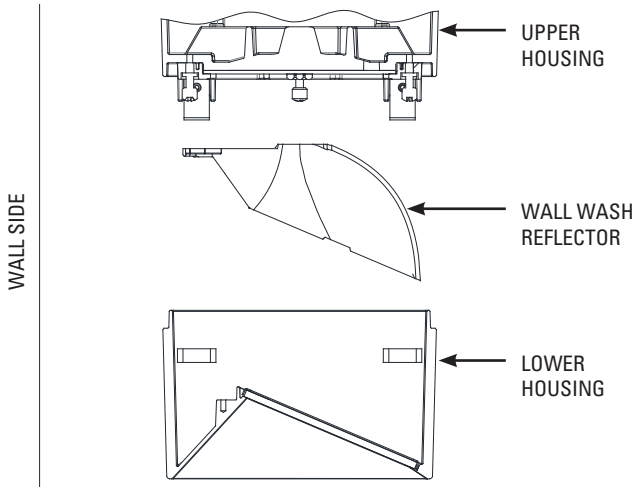

5. Orient the reflector as shown towards wall.
   Attach optical reflector over LED and secure by pulling reflector into place.
   Orient the trim as shown over reflector and snap into place.

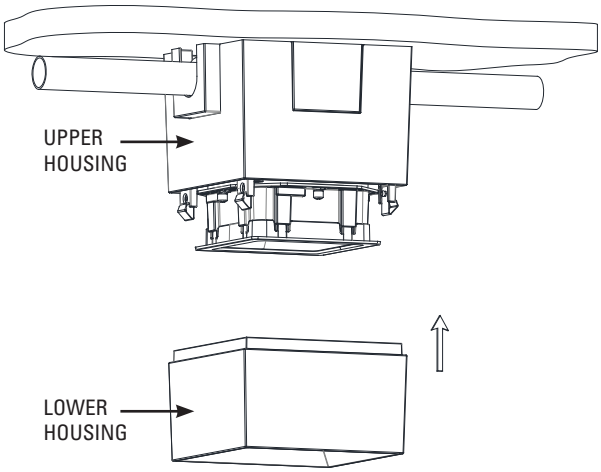

6. Snap lower housing into upper housing.

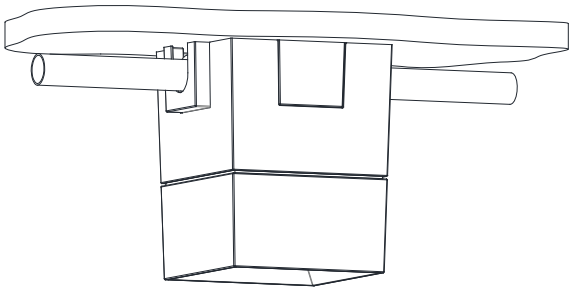

7. Assembled BLOCK for Conduit Cutout should look like the above

USAI® Lighting
www.usailighting.com
info@usailighting.com
1126 River Road
New Windsor, NY 12553
T 845–565–8500
F 845–561–1130

©2016. USAI, LLC.
All rights reserved.
All designs protected by copyright.
I2-330 Revised 01/03/2017

BeveLED® BLOCK™ Pendant - Rigid Stem

Installation Instructions

CAUTION READ BEFORE INSTALLATION

READ CAREFULLY BEFORE INSTALLING FIXTURE. RETAIN THESE INSTRUCTIONS FOR FUTURE REFERENCE.
THIS PRODUCT MUST BE INSTALLED BY A PERSON FAMILIAR WITH THE CONSTRUCTION AND OPERATION OF THE PRODUCT AND THE HAZARDS INVOLVED, IN ACCORDANCE WITH THE APPLICABLE NEC CODE.

- **Switch off main power before installation or maintaining fixture.**
- **Fixtures must be installed in applications where the ambient temperature does not exceed 40°C during normal operation.**
- **DO NOT connect or disconnect LED board wire connector when fixture is energized, as this may result in permanent damage to the LED array.**
- **We will not accept any warranty claims if incorrect driver or light engine is used.**

PJ1, PJ2, PJ3 Mounting
Rigid Stem with Surface J-Box
(see page 2)

PR1, PR2, PR3 Mounting
Rigid Stem with Recessed J-Box
(see page 5)

BLOCK mounts to a standard 4" octagonal junction box (by others)

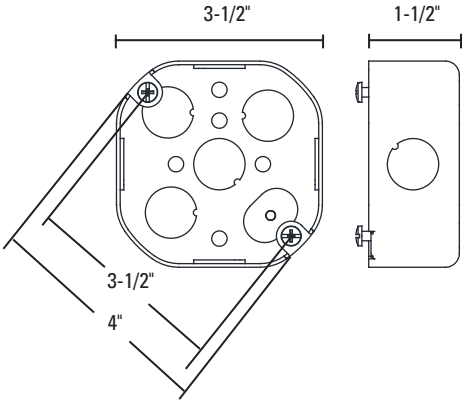

3-1/2" X 1-1/2" DEEP
OCTAGON J-BOX (BY OTHERS)

USAI® Lighting
www.usailighting.com
info@usailighting.com
1126 River Road
New Windsor, NY 12553
T 845–565–8500
F 845–561–1130

©2017. USAI, LLC.
All rights reserved.
All designs protected by copyright.
I2-377

BeveLED® BLOCK™ Pendant - Rigid Stem

Installation Instructions

CAUTION READ BEFORE INSTALLATION

READ CAREFULLY BEFORE INSTALLING FIXTURE. RETAIN THESE INSTRUCTIONS FOR FUTURE REFERENCE.
THIS PRODUCT MUST BE INSTALLED BY A PERSON FAMILIAR WITH THE CONSTRUCTION AND OPERATION OF THE PRODUCT AND THE HAZARDS INVOLVED, IN ACCORDANCE WITH THE APPLICABLE NEC CODE.

- **Switch off main power before installation or maintaining fixture.**
- **Fixtures must be installed in applications where the ambient temperature does not exceed 40°C during normal operation.**
- **DO NOT connect or disconnect LED board wire connector when fixture is energized, as this may result in permanent damage to the LED array.**
- **We will not accept any warranty claims if incorrect driver or light engine is used.**

INSTALLING CONDUIT CUTOUT KEYS

BLOCK PJ style canopy is shipped with (1) conduit cutout key and (3) solid cover keys installed. Revise canopy configuration for your project with these steps.

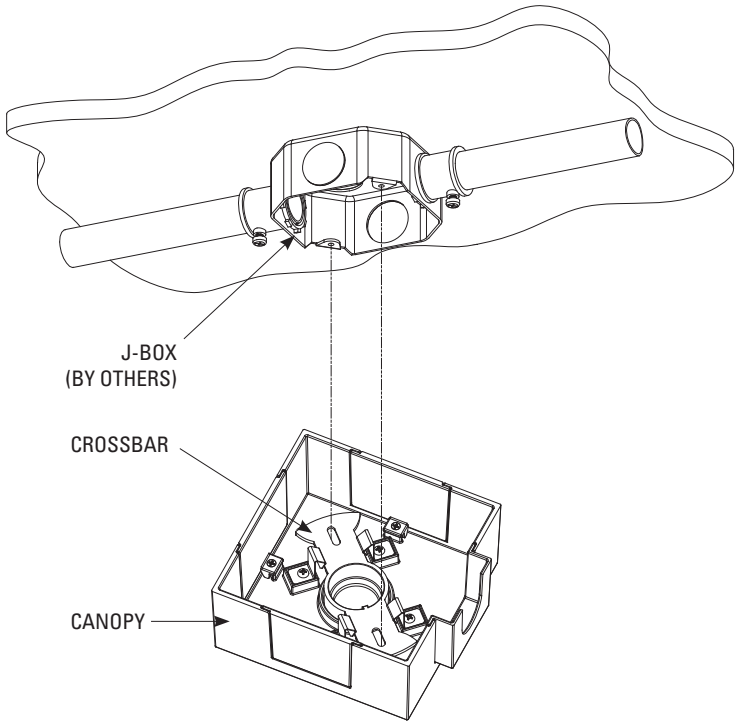

1. Align canopy with crossbar to junction box (by others) on ceiling to determine what sides need to have conduit cutout keys based off of ceiling conduit layout

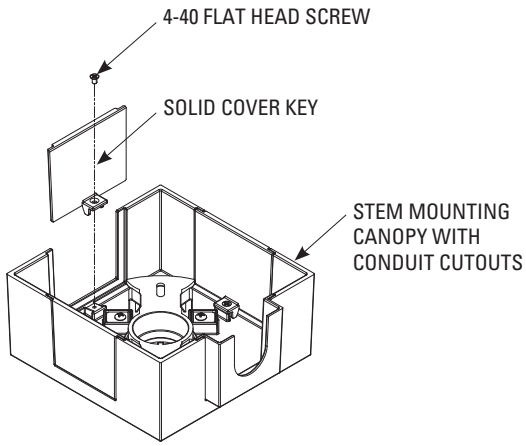

2. Remove 4-40 flat head screws that are holding in the solid cover key that needs to be removed. Remove solid cover key and discard.

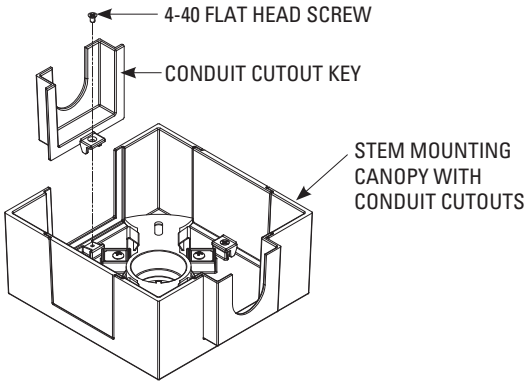

3. Attach conduit cutout key where solid cover key was removed using 4-40 flat head screw.

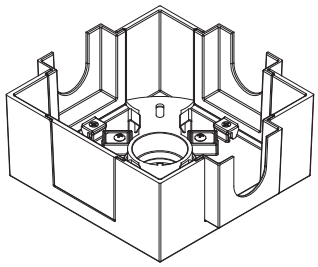

4. Repeat steps 2 and 3 for all sides that need to have conduit cutout keys.

USAI® Lighting
www.usailighting.com
info@usailighting.com
1126 River Road
New Windsor, NY 12553
T 845–565–8500
F 845–561–1130

©2017. USAI, LLC.
All rights reserved.
All designs protected by copyright.
I2-377

BeveLED® BLOCK™ Pendant - Rigid Stem

Installation Instructions

CAUTION READ BEFORE INSTALLATION

READ CAREFULLY BEFORE INSTALLING FIXTURE. RETAIN THESE INSTRUCTIONS FOR FUTURE REFERENCE.
THIS PRODUCT MUST BE INSTALLED BY A PERSON FAMILIAR WITH THE CONSTRUCTION AND OPERATION OF THE PRODUCT AND THE HAZARDS INVOLVED, IN ACCORDANCE WITH THE APPLICABLE NEC CODE.

- **Switch off main power before installation or maintaining fixture.**
- **Fixtures must be installed in applications where the ambient temperature does not exceed 40°C during normal operation.**
- **DO NOT connect or disconnect LED board wire connector when fixture is energized, as this may result in permanent damage to the LED array.**
- **We will not accept any warranty claims if incorrect driver or light engine is used.**

PJ MOUNTING: PENDANT STEM MOUNT WITH CONDUIT CUTOUT CANOPY

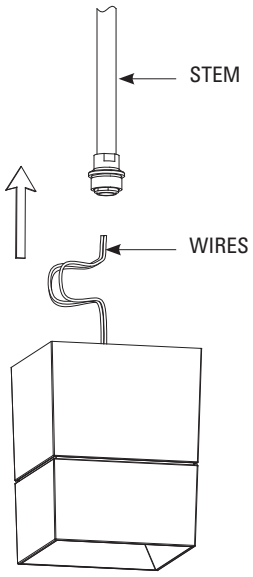

1. Insert wires into stem.

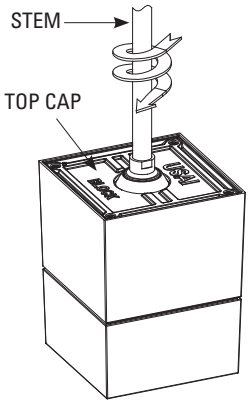

2. Screw stem onto top cap. Make sure stem and top cap are on tight.

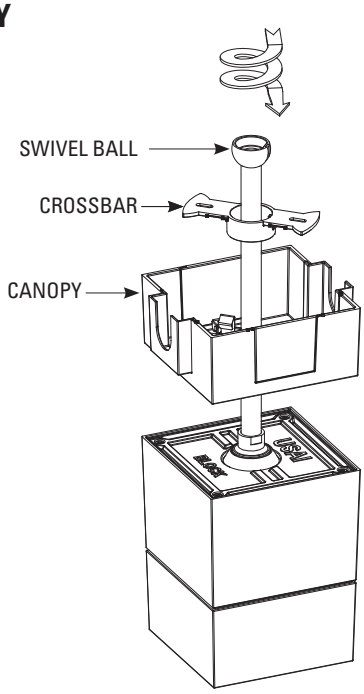

3. Insert canopy and swivel crossbar onto stem. Screw swivel ball onto stem and tighten until ball is fully seated.

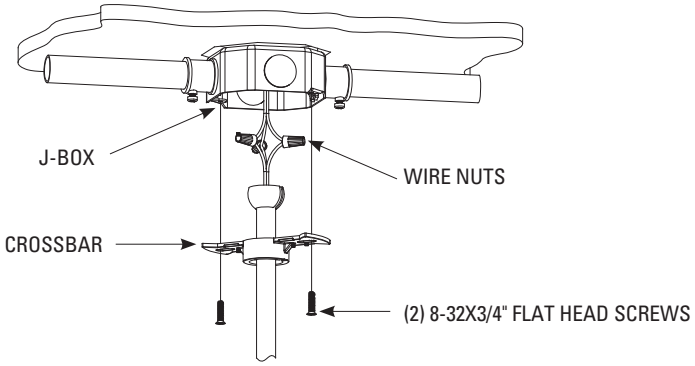

4. Make wire connection by using wire nuts (by others). Attach swivel crossbar to junction box with (2) 8-32X3/4" flat head screws provided.

USAI® Lighting
www.usailighting.com
info@usailighting.com
1126 River Road
New Windsor, NY 12553
T 845–565–8500
F 845–561–1130

©2017. USAI, LLC.
All rights reserved.
All designs protected by copyright.
I2-377

BeveLED® BLOCK™ Pendant - Rigid Stem

Installation Instructions

CAUTION READ BEFORE INSTALLATION

READ CAREFULLY BEFORE INSTALLING FIXTURE. RETAIN THESE INSTRUCTIONS FOR FUTURE REFERENCE.
THIS PRODUCT MUST BE INSTALLED BY A PERSON FAMILIAR WITH THE CONSTRUCTION AND OPERATION OF THE PRODUCT AND THE HAZARDS INVOLVED, IN ACCORDANCE WITH THE APPLICABLE NEC CODE.

- **Switch off main power before installation or maintaining fixture.**
- **Fixtures must be installed in applications where the ambient temperature does not exceed 40°C during normal operation.**
- **DO NOT connect or disconnect LED board wire connector when fixture is energized, as this may result in permanent damage to the LED array.**
- **We will not accept any warranty claims if incorrect driver or light engine is used.**

PJ MOUNTING: PENDANT STEM MOUNT WITH CONDUIT CUTOUT CANOPY (continued)

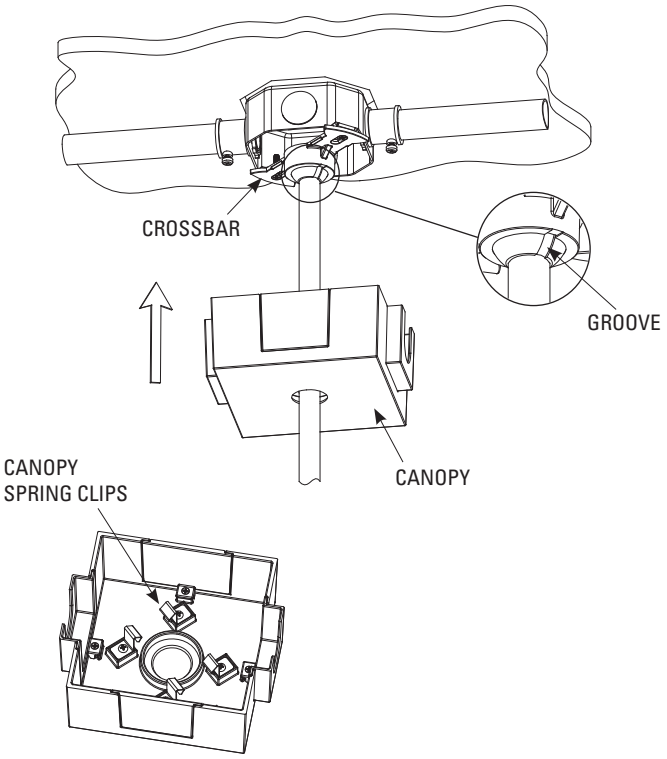

5. Make sure groove of swivel ball lines up with groove of swivel crossbar. Slide canopy up to ceiling making sure to have the conduit covers slide over 1/2" or 3/4" conduit (by others). Secure by snapping the canopy spring clips over the cross bar.

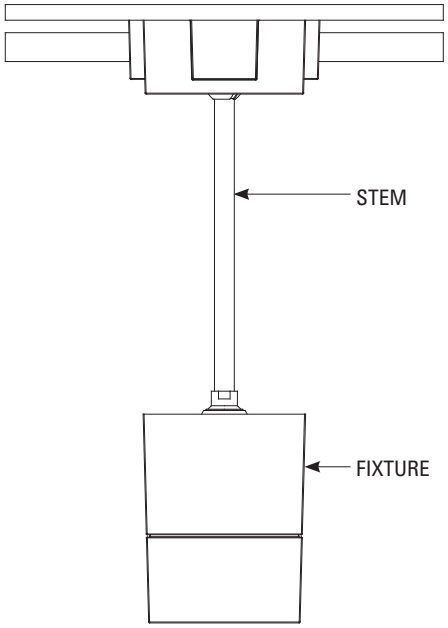

6. If fixture needs to be rotated, grip the stem with one hand and rotate the fixture with the other hand.

NOTE: For Wall Wash:

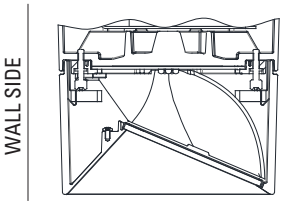

- Ensure orientation of wall wash trim is facing toward the wall as shown.
- If the orientation is off, see instruction above to see how to change the rotation.

USAI® Lighting
www.usailighting.com
info@usailighting.com
1126 River Road
New Windsor, NY 12553
T 845–565–8500
F 845–561–1130

©2017. USAI, LLC.
All rights reserved.
All designs protected by copyright.
I2-377

BeveLED® BLOCK™ Pendant - Rigid Stem

Installation Instructions

CAUTION READ BEFORE INSTALLATION

READ CAREFULLY BEFORE INSTALLING FIXTURE. RETAIN THESE INSTRUCTIONS FOR FUTURE REFERENCE.
THIS PRODUCT MUST BE INSTALLED BY A PERSON FAMILIAR WITH THE CONSTRUCTION AND OPERATION OF THE PRODUCT AND THE HAZARDS INVOLVED, IN ACCORDANCE WITH THE APPLICABLE NEC CODE.

- **Switch off main power before installation or maintaining fixture.**
- **Fixtures must be installed in applications where the ambient temperature does not exceed 40°C during normal operation.**
- **DO NOT connect or disconnect LED board wire connector when fixture is energized, as this may result in permanent damage to the LED array.**
- **We will not accept any warranty claims if incorrect driver or light engine is used.**

PR MOUNTING: PENDANT STEM MOUNT WITH STANDARD RECESSED J-BOX CANOPY

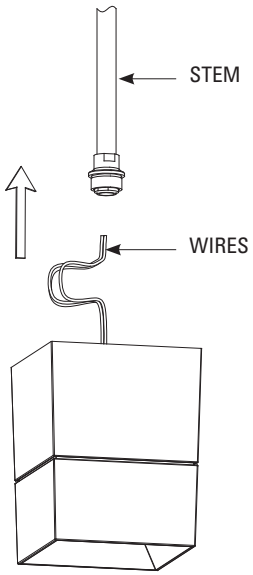

1. Insert wires into stem.

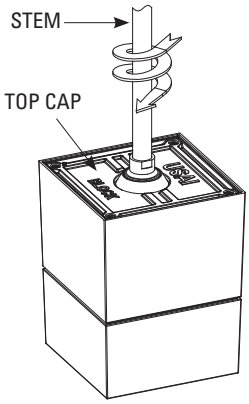

2. Screw stem onto top cap. Make sure stem and top cap are on tight.

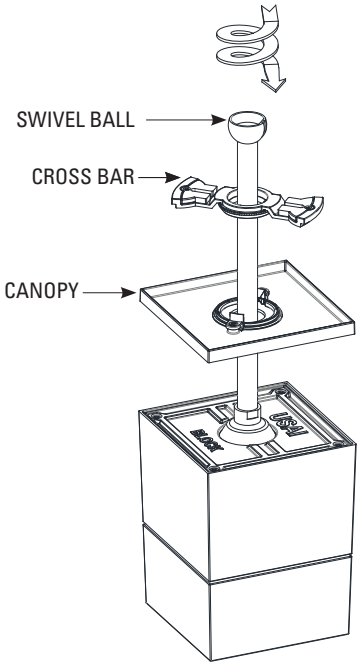

3. Insert canopy and swivel crossbar onto stem. Screw swivel ball onto stem and tighten until ball is fully seated.

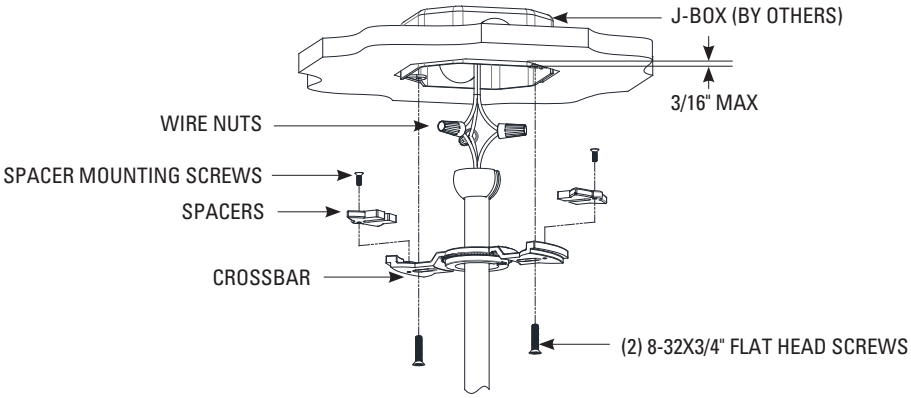

4. Make wire connection by using wire nuts (by others). If the J-box is below the ceiling panel, spacers on the crossbar can be removed to compensate. Remove (2) screws and (2) spacers from the crossbar. J-box maximum overlap is 3/16". Attach swivel crossbar to junction box with (2) 8-32X3/4" flat head screws provided.

USAI® Lighting
www.usailighting.com
info@usailighting.com
1126 River Road
New Windsor, NY 12553
T 845–565–8500
F 845–561–1130

©2017. USAI, LLC.
All rights reserved.
All designs protected by copyright.
I2-377

BeveLED® BLOCK™ Pendant - Rigid Stem

Installation Instructions

CAUTION READ BEFORE INSTALLATION

READ CAREFULLY BEFORE INSTALLING FIXTURE. RETAIN THESE INSTRUCTIONS FOR FUTURE REFERENCE.
THIS PRODUCT MUST BE INSTALLED BY A PERSON FAMILIAR WITH THE CONSTRUCTION AND OPERATION OF THE PRODUCT AND THE HAZARDS INVOLVED, IN ACCORDANCE WITH THE APPLICABLE NEC CODE.

- **Switch off main power before installation or maintaining fixture.**
- **Fixtures must be installed in applications where the ambient temperature does not exceed 40°C during normal operation.**
- **DO NOT connect or disconnect LED board wire connector when fixture is energized, as this may result in permanent damage to the LED array.**
- **We will not accept any warranty claims if incorrect driver or light engine is used.**

PR MOUNTING: PENDANT STEM MOUNT WITH STANDARD RECESSED J-BOX CANOPY (continued)

ROUND CANOPY

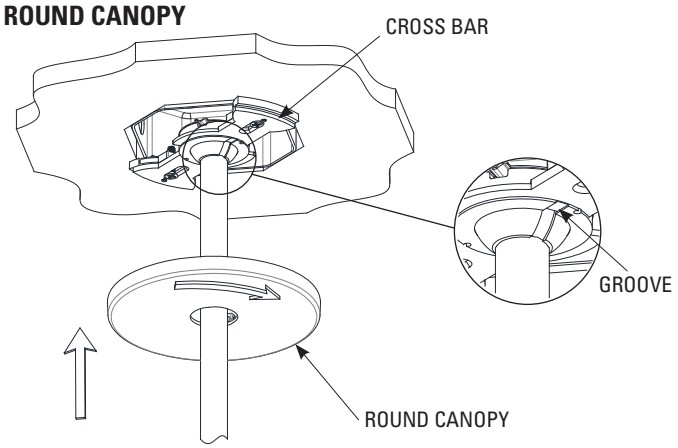

5. Make sure groove of swivel ball lines up with groove of swivel crossbar for round canopy. Lift canopy to ceiling and lock onto crossbar by turning clockwise.

SQUARE CANOPY

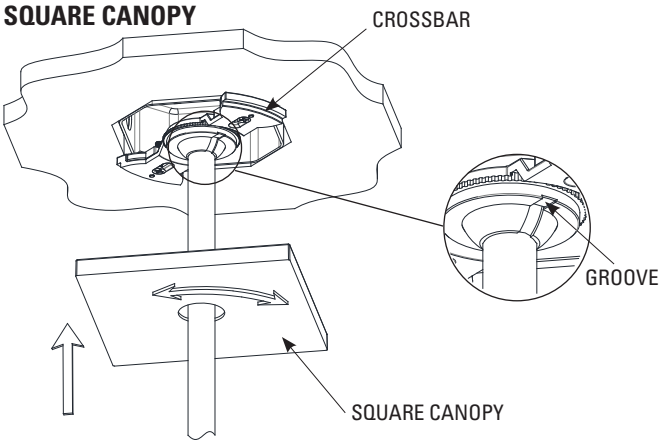

5. Make sure groove of swivel ball lines up with groove of swivel crossbar for square canopy. Lift canopy to ceiling and snap onto crossbar. Canopy is able to rotate up to 90-degree after it is snapped in, to align on ceiling correctly.

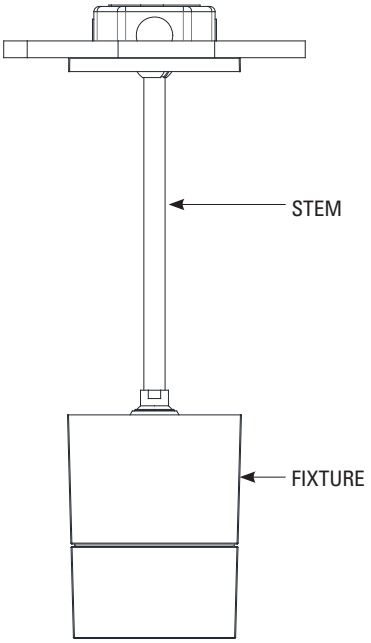

6. If fixture needs to be rotated, grip the stem with one hand and rotate the fixture with the other hand.

NOTE: For Wall Wash:

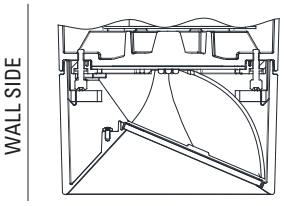

- Ensure orientation of wall wash trim is facing toward the wall as shown.
- If the orientation is off, see instruction above to see how to change the rotation.

USAI® Lighting
www.usailighting.com
info@usailighting.com
1126 River Road
New Windsor, NY 12553
T 845–565–8500
F 845–561–1130

©2017. USAI, LLC.
All rights reserved.
All designs protected by copyright.
I2-377

BeveLED® BLOCK™ Pendant - Cable

Installation Instructions

CAUTION READ BEFORE INSTALLATION

READ CAREFULLY BEFORE INSTALLING FIXTURE. RETAIN THESE INSTRUCTIONS FOR FUTURE REFERENCE.
THIS PRODUCT MUST BE INSTALLED BY A PERSON FAMILIAR WITH THE CONSTRUCTION AND OPERATION OF THE PRODUCT AND THE HAZARDS INVOLVED, IN ACCORDANCE WITH THE APPLICABLE NEC CODE.

- **Switch off main power before installation or maintaining fixture.**
- **Fixtures must be installed in applications where the ambient temperature does not exceed 40°C during normal operation.**
- **DO NOT connect or disconnect LED board wire connector when fixture is energized, as this may result in permanent damage to the LED array.**
- **We will not accept any warranty claims if incorrect driver or light engine is used.**

CJ1, CJ2, CJ3 Mounting
Cable Mount with Surface J-Box
(see page 2)

CR1, CR2, CR3 Mounting
Cable Mount with Recessed J-Box
(see page 5)

BLOCK mounts to a standard 4" octagonal junction box (by others)

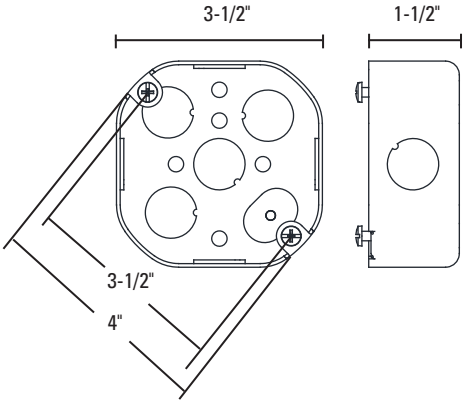

3-1/2" X 1-1/2" DEEP
OCTAGON J-BOX (BY OTHERS)

USAI® Lighting
www.usailighting.com
info@usailighting.com
1126 River Road
New Windsor, NY 12553
T 845–565–8500
F 845–561–1130

©2017. USAI, LLC.
All rights reserved.
All designs protected by copyright.
I2-378

BeveLED® BLOCK™ Pendant - Cable

Installation Instructions

CAUTION READ BEFORE INSTALLATION

READ CAREFULLY BEFORE INSTALLING FIXTURE. RETAIN THESE INSTRUCTIONS FOR FUTURE REFERENCE.
THIS PRODUCT MUST BE INSTALLED BY A PERSON FAMILIAR WITH THE CONSTRUCTION AND OPERATION OF THE PRODUCT AND THE HAZARDS INVOLVED, IN ACCORDANCE WITH THE APPLICABLE NEC CODE.

- **Switch off main power before installation or maintaining fixture.**
- **Fixtures must be installed in applications where the ambient temperature does not exceed 40°C during normal operation.**
- **DO NOT connect or disconnect LED board wire connector when fixture is energized, as this may result in permanent damage to the LED array.**
- **We will not accept any warranty claims if incorrect driver or light engine is used.**

INSTALLING CONDUIT CUTOUT KEYS

BLOCK CJ style canopy is shipped with (1) conduit cutout key and (3) solid cover keys installed. Revise canopy configuration for your project with these steps.

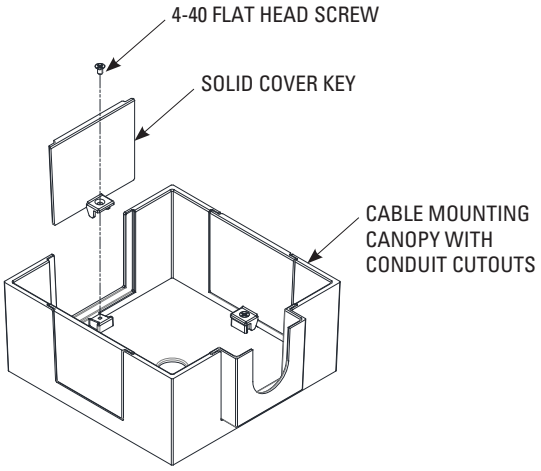

1. Determine what sides need to have conduit cutout keys based off of ceiling conduit layout.

2. Remove 4-40 flat head screws that are holding in the solid cover key that needs to be removed. Remove solid cover key and discard.

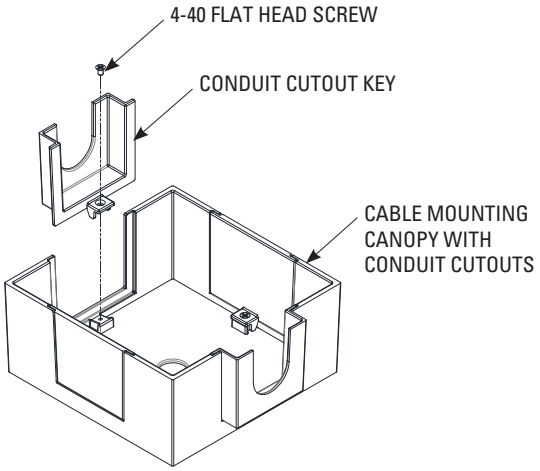

3. Attach conduit cutout key where solid cover key was removed using 4-40 flat head screw.

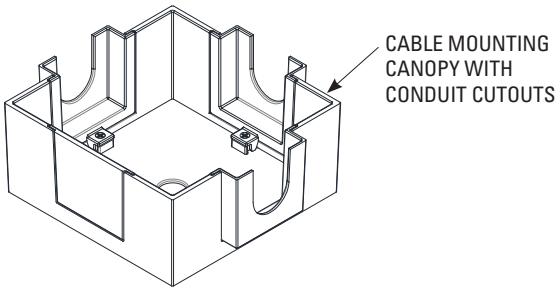

4. Repeat steps 2 and 3 for all sides that need to have conduit cutout keys.

USAI® Lighting
www.usailighting.com
info@usailighting.com
1126 River Road
New Windsor, NY 12553
T 845–565–8500
F 845–561–1130

©2017. USAI, LLC.
All rights reserved.
All designs protected by copyright.
I2-378

BeveLED® BLOCK™ Pendant - Cable

Installation Instructions

CAUTION READ BEFORE INSTALLATION

READ CAREFULLY BEFORE INSTALLING FIXTURE. RETAIN THESE INSTRUCTIONS FOR FUTURE REFERENCE.
THIS PRODUCT MUST BE INSTALLED BY A PERSON FAMILIAR WITH THE CONSTRUCTION AND OPERATION OF THE PRODUCT AND THE HAZARDS INVOLVED, IN ACCORDANCE WITH THE APPLICABLE NEC CODE.

- **Switch off main power before installation or maintaining fixture.**
- **Fixtures must be installed in applications where the ambient temperature does not exceed 40°C during normal operation.**
- **DO NOT connect or disconnect LED board wire connector when fixture is energized, as this may result in permanent damage to the LED array.**
- **We will not accept any warranty claims if incorrect driver or light engine is used.**

CJ MOUNTING: CABLE MOUNT WITH CONDUIT CUTOUT CANOPY

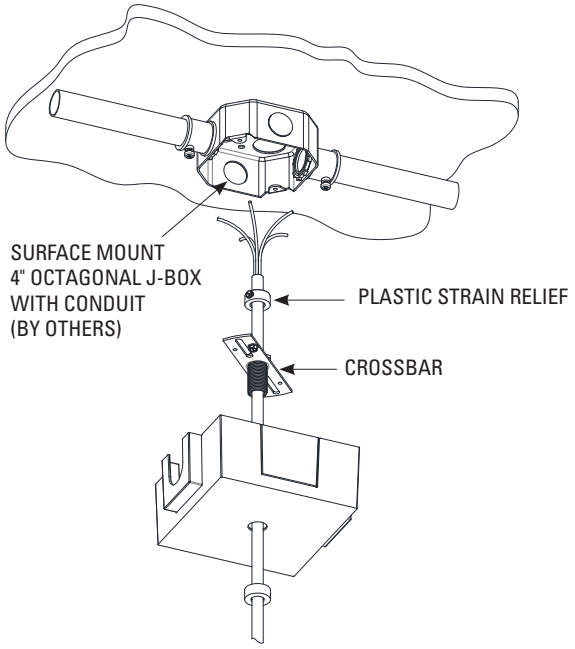

1. Remove fixture from box. If necessary, loosen slotted set screws on plastic strain relief and set cord to desired suspension length, then re-tighten screws. Cut back cord to appropriate length and position fixture up to J-box.

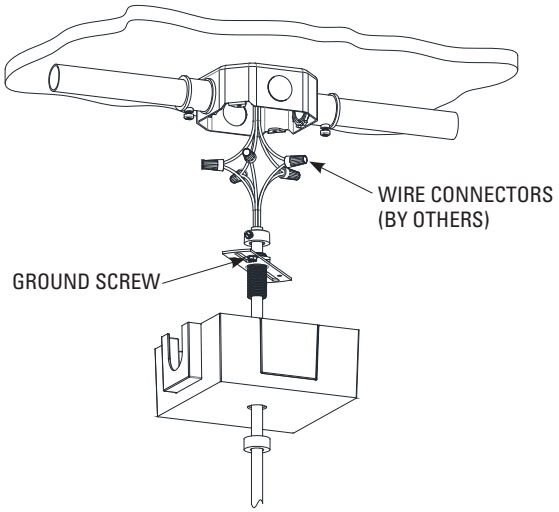

2. With cord positioned near j-box, make wire connections and push wired and connectors into j-box. Use ground screw provided on crossbar to ground fixture.

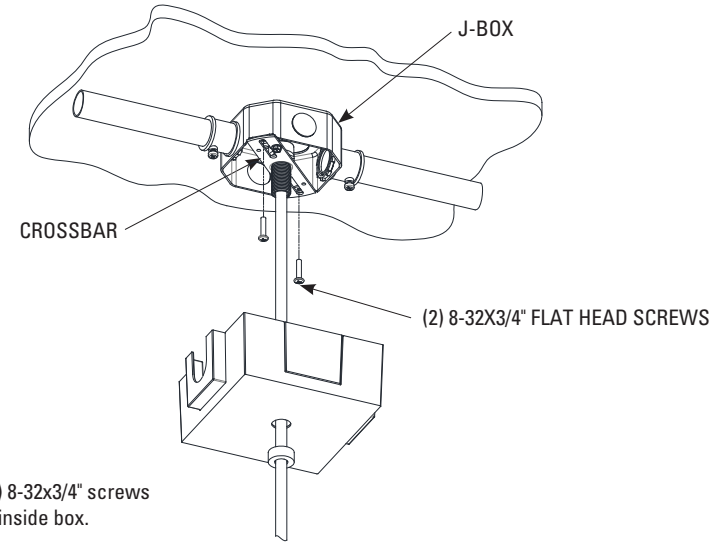

3. Mount cross bar to j-box with (2) 8-32x3/4" screws provided. Ensure connections are inside box.

USAI® Lighting
www.usailighting.com
info@usailighting.com
1126 River Road
New Windsor, NY 12553
T 845–565–8500
F 845–561–1130

©2017. USAI, LLC.
All rights reserved.
All designs protected by copyright.
I2-378

BeveLED® BLOCK™ Pendant - Cable

Installation Instructions

CAUTION READ BEFORE INSTALLATION

READ CAREFULLY BEFORE INSTALLING FIXTURE. RETAIN THESE INSTRUCTIONS FOR FUTURE REFERENCE.
THIS PRODUCT MUST BE INSTALLED BY A PERSON FAMILIAR WITH THE CONSTRUCTION AND OPERATION OF THE PRODUCT AND THE HAZARDS INVOLVED, IN ACCORDANCE WITH THE APPLICABLE NEC CODE.

- **Switch off main power before installation or maintaining fixture.**
- **Fixtures must be installed in applications where the ambient temperature does not exceed 40°C during normal operation.**
- **DO NOT connect or disconnect LED board wire connector when fixture is energized, as this may result in permanent damage to the LED array.**
- **We will not accept any warranty claims if incorrect driver or light engine is used.**

CJ MOUNTING: CABLE MOUNT WITH CONDUIT CUTOUT CANOPY (continued)

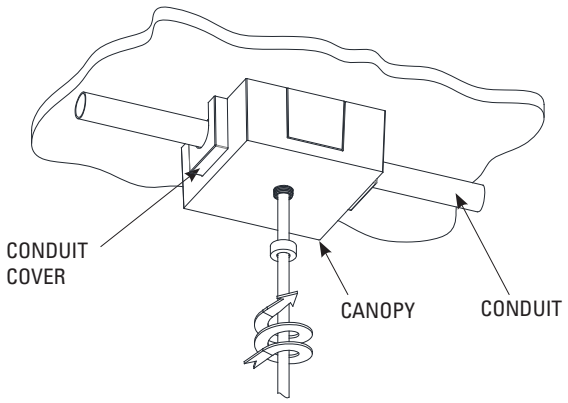

4. Slide canopy up to ceiling making sure to have the conduit covers slide over 1/2" or 3/4" conduit (by others) and center around cord grip threads. Secure to ceiling with painted cap nut provided.

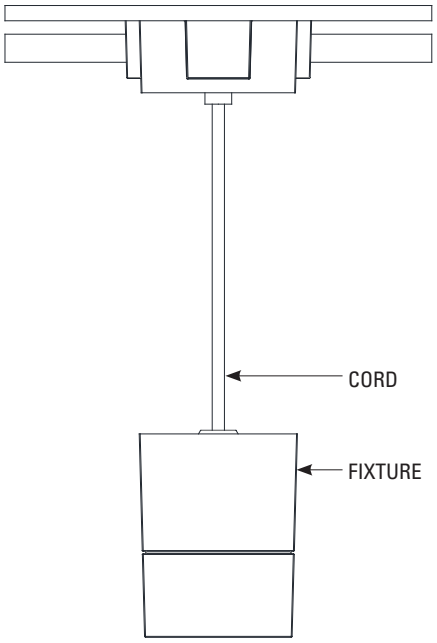

5. If fixture needs to be rotated, grip the cord by the fixture, lift up fixture with the other hand, and set down once correct orientation is acquired.

NOTE: For Wall Wash:

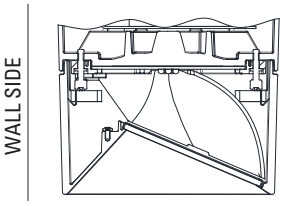

- Ensure orientation of wall wash trim is facing toward the wall as shown.
- If the orientation is off, see instruction above to see how to change the rotation.

USAI® Lighting
www.usailighting.com
info@usailighting.com
1126 River Road
New Windsor, NY 12553
T 845–565–8500
F 845–561–1130

©2017. USAI, LLC.
All rights reserved.
All designs protected by copyright.
I2-378

BeveLED® BLOCK™ Pendant - Cable

Installation Instructions

CAUTION READ BEFORE INSTALLATION

READ CAREFULLY BEFORE INSTALLING FIXTURE. RETAIN THESE INSTRUCTIONS FOR FUTURE REFERENCE.
THIS PRODUCT MUST BE INSTALLED BY A PERSON FAMILIAR WITH THE CONSTRUCTION AND OPERATION OF THE PRODUCT AND THE HAZARDS INVOLVED, IN ACCORDANCE WITH THE APPLICABLE NEC CODE.

- **Switch off main power before installation or maintaining fixture.**
- **Fixtures must be installed in applications where the ambient temperature does not exceed 40°C during normal operation.**
- **DO NOT connect or disconnect LED board wire connector when fixture is energized, as this may result in permanent damage to the LED array.**
- **We will not accept any warranty claims if incorrect driver or light engine is used.**

CR MOUNTING: CABLE MOUNT WITH STANDARD RECESSED J-BOX CANOPY

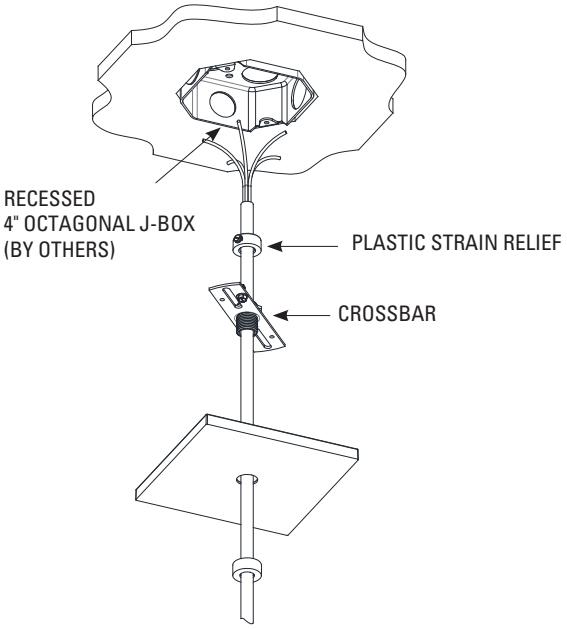

1. Remove fixture from box. If necessary, loosen slotted set screws on plastic strain relief and set cord to desired suspension length, then re-tighten screws. Cut back cord to appropriate length and position fixture up to J-box.

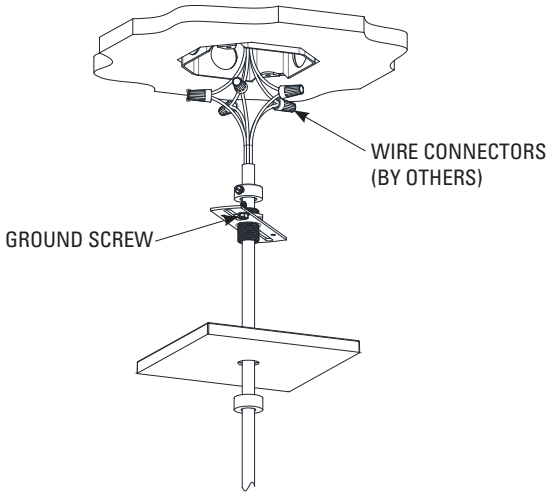

2. With cord positioned near j-box, make wire connections and push wired and connectors into j-box. Use ground screw provided on crossbar to ground fixture.

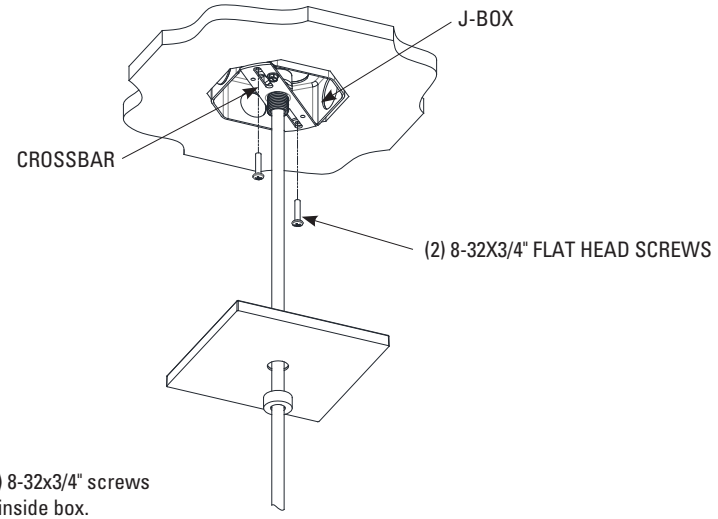

3. Mount cross bar to j-box with (2) 8-32x3/4" screws provided. Ensure connections are inside box.

USAI® Lighting
www.usailighting.com
info@usailighting.com
1126 River Road
New Windsor, NY 12553
T 845–565–8500
F 845–561–1130

©2017. USAI, LLC.
All rights reserved.
All designs protected by copyright.
I2-378

BeveLED® BLOCK™ Pendant - Cable

Installation Instructions

CAUTION READ BEFORE INSTALLATION

READ CAREFULLY BEFORE INSTALLING FIXTURE. RETAIN THESE INSTRUCTIONS FOR FUTURE REFERENCE.
THIS PRODUCT MUST BE INSTALLED BY A PERSON FAMILIAR WITH THE CONSTRUCTION AND OPERATION OF THE PRODUCT AND THE HAZARDS INVOLVED, IN ACCORDANCE WITH THE APPLICABLE NEC CODE.

- **Switch off main power before installation or maintaining fixture.**
- **Fixtures must be installed in applications where the ambient temperature does not exceed 40°C during normal operation.**
- **DO NOT connect or disconnect LED board wire connector when fixture is energized, as this may result in permanent damage to the LED array.**
- **We will not accept any warranty claims if incorrect driver or light engine is used.**

CR MOUNTING: CABLE MOUNT WITH STANDARD RECESSED J-BOX CANOPY (continued)

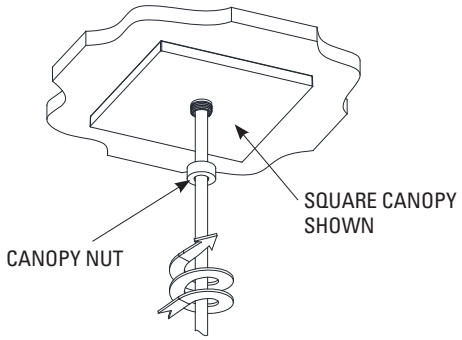

4. Slide canopy up to ceiling and center around cord grip threads. Secure to ceiling with painted cap nut provided. Note orientation of canopy to ceiling before tightening canopy nut.

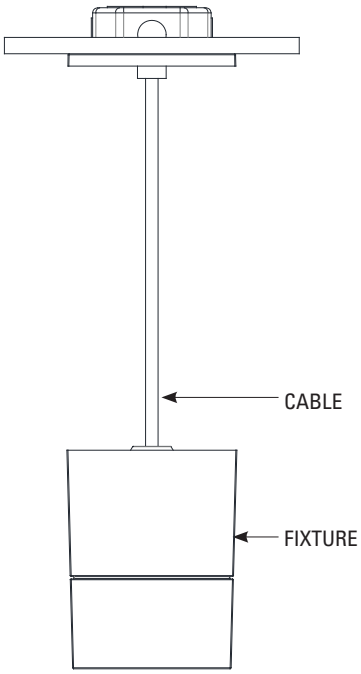

5. If fixture needs to be rotated, grip the cord by the fixture, lift up fixture with the other hand, and set down once correct orientation is acquired.

NOTE: For Wall Wash:

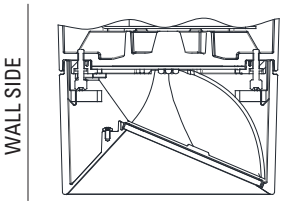

- Ensure orientation of wall wash trim is facing toward the wall as shown.
- If the orientation is off, see instruction above to see how to change the rotation.

USAI® Lighting
www.usailighting.com
info@usailighting.com
1126 River Road
New Windsor, NY 12553
T 845–565–8500
F 845–561–1130

©2017. USAI, LLC.
All rights reserved.
All designs protected by copyright.
I2-378

TRP , RDI, & QSP 30LED INSTALLATION INSTRUCTIONS (PG 1/2)

SAVE THESE INSTRUCTIONS

WARNING! LUMINAIRES require high current and voltage.

WARNING! Fixtures must be grounded and installed in accordance with the National Electrical Code and all local codes. Failure to do so may increase the **RISK OF PERSONAL INJURY, PROPERTY DAMAGE, FIRE AND DEATH.** Install and use so product does not cause a hazard and use only in environments for which the product is specifically marked.

WARNING! This product contains chemicals known to the State of California to cause cancer, birth defects, and/or other reproductive harm. Thoroughly wash hands after installing, handling, cleaning, or otherwise touching this product.

CAUTION! Follow ALL luminaire manufacturer's recommendations, product markings, instructions, restrictions and warnings regarding lumninaire operation, burning position, cycling and lamp replacement. Luminaire label shows electrical and environmental requirements.

All electrical work must be done by a qualified electrician.

Turn off electric power to all affected circuits and allow to cool before servicing.

A regularly scheduled maintenance program should be established to retain optimum light output and reduce heat retention. Dusting with a soft, clean, dry cloth is normally sufficient for the optical assembly. Any accumulation of dust or dirt should be removed regularly.

Carefully read these instructions before installing product. If you do not understand these instructions, before starting any work, contact your Hubbell Lighting distributor or techsupport@hubbell-ltg.com or (864) 678-1000

Give instructions to facility owner/manager for future reference.

NOTE: DO NOT OPEN THIS PRODUCT UNLESS INSTRUCTED BY STEPS INCLUDED IN THESE INSTRUCTIONS OR BY HUBBELL LIGHTING TECHNICAL SUPPORT PERSONNEL. FIXTURE HAS BEEN DESIGNED WITH EASY TO INSTALL MOUNTING BRACKETS.

TOOLS REQUIRED: FLAT BLADE SCREWDRIVER OR 5/16" NUT DRIVER, DRILL, ANY ADDITIONAL TOOLS NEEDED FOR APPROPRIATE WALL FASTENERS

PARTS REQUIRED: (SUPPLIED BY OTHERS) SILICONE CAULK, 1/4" WALL ANCHORS AND FASTENERS APPROPRIATE FOR WALL CONSTRUCTION TYPE

STEP I - MOUNTING PREPARATION (Figure 1)

CAUTION:
TRP FIXTURE WEIGHS ABOUT 11 LBS
RDI FIXTURE WEIGHS ABOUT 12 LBS

- Remove fixture mounting bracket from fixture by loosing the two hex screws.
- Align holes in bracket to matching j-box holes.
- Secure mounting bracket to j-box.
- If not j-box available, mounting plate must be anchored to wall (hardware by others).
- Pull the supply wires (C) from junction box (B).
- Apply caulking sealant (supplied by others) around the top and two sides of the bracket where it meets the wall.

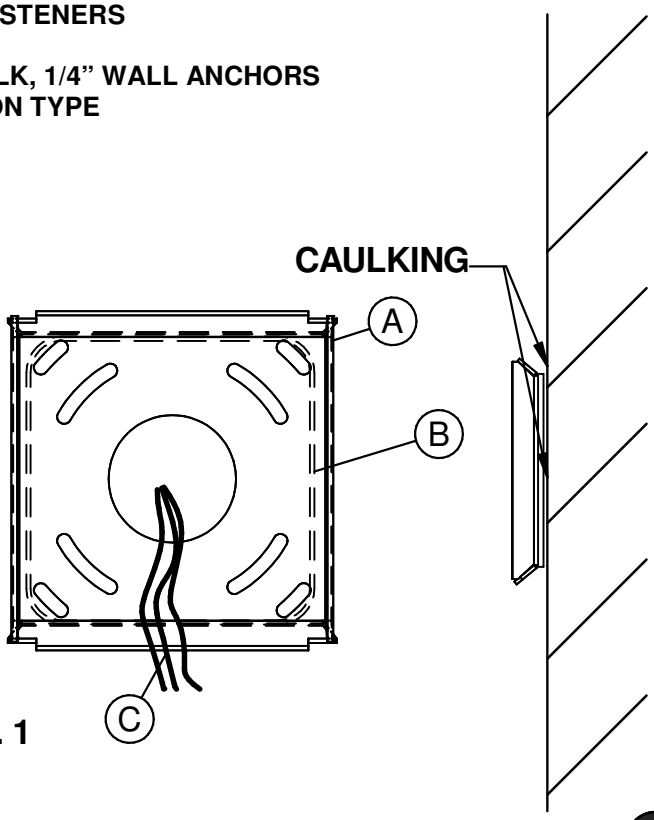

FIG. 1

701 Millennium Boulevard Greenville, SC 29607 (864) 678-1000
www.spauldinglighting.com

SAVE THESE INSTRUCTIONS

NOTE: DO NOT OPEN THIS PRODUCT UNLESS INSTRUCTED BY STEPS INCLUDED IN THESE INSTRUCTIONS OR BY HUBBELL LIGHTING TECHNICAL SUPPORT PERSONNEL. FIXTURE HAS BEEN DESIGNED WITH EASY TO INSTALL MOUNTING BRACKETS.

Step II WIRING (See Fig. 2)

POWER MUST BE OFF.

(WIRING MUST BE PERFORMED BY A QUALIFIED ELECTRICIAN)

CAUTION! SHOCK HAZARD, DO NOT CONNECT RED AND WHITE WIRES TOGETHER UNTIL ALL OTHER CONNECTIONS HAVE BEEN MADE.

- Wire service leads to fixture power leads according to local and National Electric Codes.
- Luminaire is equipped with a universal voltage driver capable of 120V-277V input.
- For direct wire connections, connect ground wire to green wire. Connect black to black and white to neutral then push connections back inside J-box.

NOTE: If an Emergency Battery Pack is used with the fixture, refer to the battery pack instruction sheet for correct wiring instructions of the battery unit.

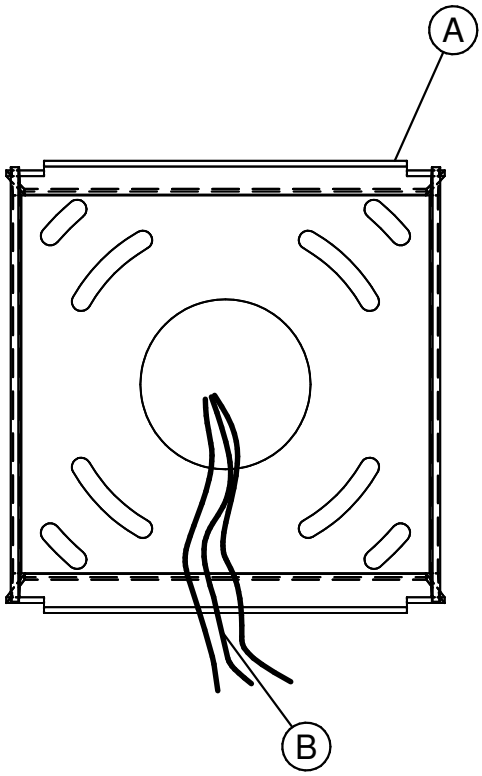

FIG. 2

STEP III FIXTURE MOUNTING (See Fig. 3)

- Hold fixture at a slight angle, slide over mounting plate and rotate upward to capture plate.
- Tighten screw (G) securely.
- Check to ensure secure mount.
- Energize product.

WARNING:
NOT DESIGNED FOR UPLIGHT FIXTURE TO BE INSTALLED FACE DOWN ONLY

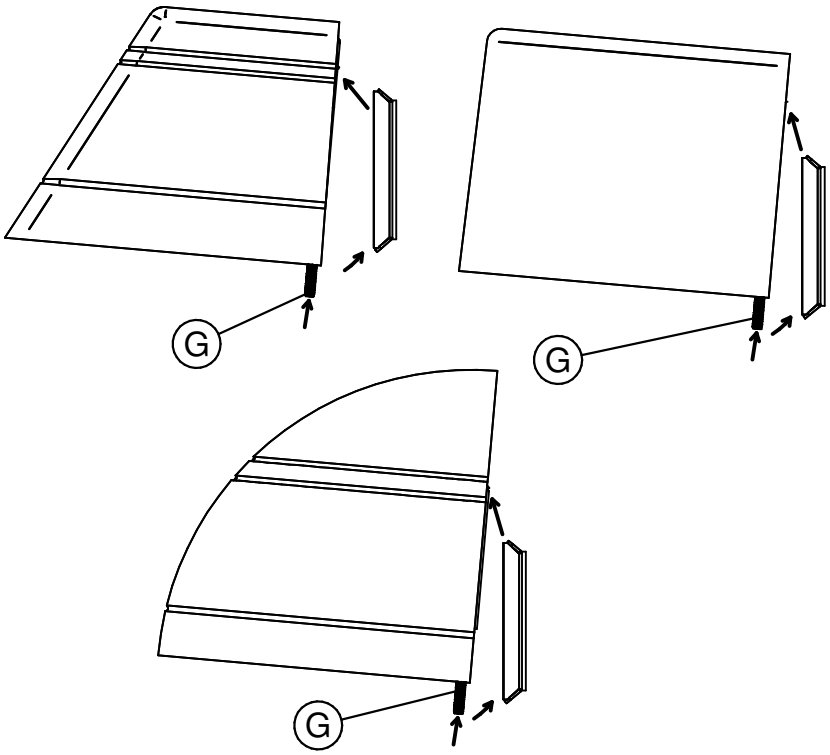

FIG. 3

701 Millennium Boulevard Greenville, SC 29607 (864) 678-1000
www.spauldinglighting.com

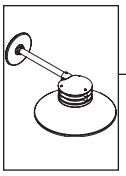

BEACON WALL MOUNT (BWM)

PROJECT:	
TYPE:	
CATALOG NUMBER:	BWM LED
SOURCE:	LED - Power of 'L' Technology - Line Voltage - 120V only
NOTES:	

CATALOG NUMBER LOGIC

	BWM		LED							

Example - BWM - SD10 - LED - L10 - BZW - A - - - CRW

Material

Blank - Aluminum
C - Copper

Series

BWM - Beacon Wall Mount

Style

SD10 - 10 Inch disk
SD12 - 12 Inch Shade
SD15 - 15 Inch Shade

Source

LED - 'L' Technology *(Line Voltage - 120V only)*

LED Type

L10 - 10WLED/2700K
L11 - 10WLED/3000K
L12 - 10WLED/4000K
L13 - 10WLED/2200K-3500K Warm Dim
L15 - 20WLED/2700K
L16 - 20WLED/3000K
L17 - 20WLED/4000K
L18 - 20WLED/2200K-3500K Warm Dim

Finish

NAT - Natural*
BP - Brown Patina*
GP - Green Patina*
NIC - Nickel Plate*
BZW - Bronze Wrinkle

*See Powder Coat Finish Chart to the right for additional choices. *Not available with Aluminum. For Aluminum fixtures, specify Standard or Premium Powder Coat.*

Powder Coat Standard Finish

Powder Coat Color	Satin	Wrinkle
Bronze	BZP	BZW
Black	BLP	BLW
White (Gloss)	WHP	WHW
Aluminum	SAP	—
Verde	—	VER

Powder Coat Premium Finish

ABP	Antique Brass Powder	CMG	Cascade Mountain Granite	RMG	Rocky Mountain Granite
AMG	Aleutian Mountain Granite	CRI	Cracked Ice	SDS	Sonoran Desert Sandstone
AQW	Antique White	CRM	Cream	SMG	Sierra Mountain Granite
BCM	Black Chrome	HUG	Hunter Green	TXF	Textured Forest
BGE	Beige	MDS	Mojave Desert Sandstone	WCP	Weathered Copper
BPP	Brown Patina Powder	NBP	Natural Brass Powder	WIR	Weathered Iron
CAP	Clear Anodized Powder	OCP	Old Copper		*Also available in **RAL** Finishes See submittal SUB-1439-00*

Rings

A - Aluminum *(Finish to match Fixture.)*
B - Brass *(Finish to match Fixture.)*
S - Stainless Steel *(Stainless Steel Rings are provided in Natural (NAT) regardless of Finish.)*

Accessories *(Select one.)*

DT - Dark Top *(Eliminates glow in upper window. Material and Finish to match fixture.)*
MSH - Mesh Screen *(Material and Finish to match Fixture.)*

use DT option to eliminate uplight

Option

CLR - Clear Coat Protection *For use with Natural (NAT) finish only. For use with Copper Fixture only.*

Canopy

CRW - 5" Round Canopy
CQW - 5" Square Canopy
CTW - 3"x5" Rectangular Canopy

LM79 DATA / L70 DATA

TEKA LED #	LUMENS (Delivered)	CCT	INPUT WATTS (Typ.)	CR (Typ.)	BUG Rating	Minimum Rated Life (hrs.) 70% of initial lumens (L70)
L10	433	2700	10	90	B0-U3-G1	50,000
L11	459	3000	10	90	B0-U3-G1	50,000
L12	504	4000	10	90	B0-U3-G1	50,000
L13	494	2200-3500 warm dim	10	90	B0-U3-G1	50,000
L15	824	2700	20	90	B0-U3-G1	50,000
L16	871	3000	20	90	B0-U3-G1	50,000
L17	959	4000	20	90	B0-U3-G1	50,000
L18	940	2200-3500 warm dim	20	90	B0-U3-G1	50,000

TEKA ILLUMINATION
40429 Brickyard Drive • Madera, CA 93636 • USA
559.438.5800 • FAX 559.438.5900
www.tekaillumination.com • info@tekaillumination.com

SUBMITTAL DATE 04-04-2018
DRAWING NUMBER SUB-2574-00

THIS DOCUMENT CONTAINS PROPRIETARY INFORMATION OF TEKA ILLUMINATION AND ITS RECEIPT OR POSSESSION DOES NOT CONVEY ANY RIGHTS TO REPRODUCE, DISCLOSE ITS CONTENTS, OR TO MANUFACTURE, USE OR SELL ANYTHING IT MAY DESCRIBE. REPRODUCTION, DISCLOSURE OR USE WITHOUT SPECIFIC WRITTEN AUTHORIZATION OF TEKA ILLUMINATION IS STRICTLY FORBIDDEN.

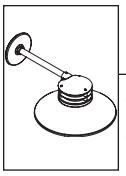

BEACON WALL MOUNT (BWM)

PROJECT:	
TYPE:	

FRONT VIEW **SIDE VIEW**

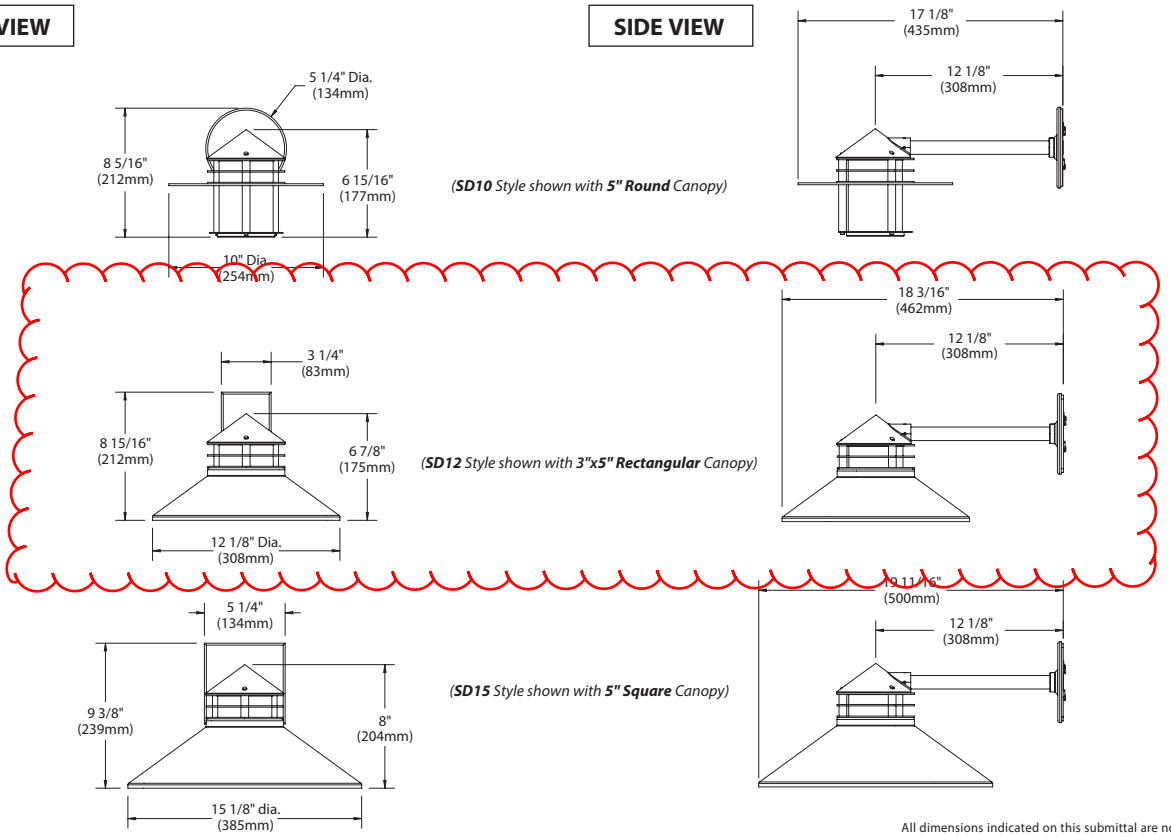

All dimensions indicated on this submittal are nominal.
Contact Technical Sales if you require more stringent specifications.

SPECIFICATIONS

GreenSource Initiative™
Metal and packaging components are made from recycled materials. Manufactured using renewable solar energy, produced onsite. Returnable to manufacturer at end of life to ensure cradle-to-cradle handling. Packaging contains no chlorofluorocarbons (CFC's). Use of this product may qualify for GreenSource efficacy and recycling rebate(s). Consult www.tekaillumination.com/greensource for program requirements.

Materials
Copper and Brass: Constructed from copper and brass. These enduring metals are inherently corrosion resistant.

Aluminum: Constructed from Copper-Free aluminum (Type 6061-T6).

Shade
Hand spun from 16GA 3003-H14 aluminum or 16GA C101 copper Specify 12" or 15" diameter.

Disk
10" diameter disk made from 1/8" 6061-T6 Aluminum or 1/8" Copper.

Body
360 Aluminum Cast or C836 Red Brass cast. High temperature, silicone gasket provides water tight seal to shade assembly.

Lens
3-1/2" dia. frosted acrylic lens with frosted acrylic downlight lens provides sealed optical compartment.

BKSSL®
Integrated solid state system with 'L' technology is scalable for field upgrade. Modular design with electrical quick disconnects permit field maintenance available in 27000k, 3000k or 4000k specify 10W or 20W. Warm Dim LED 2200K-3500K specify 10W or 20W. Line voltage input 120V only. Compatible with electronic low voltage dimmers only.

Wiring
Tefzel™ coated wire, 18AWG, 600V, 210° C rated and certified to UL 1659 standard.

Rings
Solid aluminum accent rings with solid aluminum spacers; brass or stainless steel accent rings with solid brass spacers.

Canopy
Canopy Cover conceals mounting plate and hardware. Material is hand spun from high purity, solid copper plate with tamper resistant machined 360 aluminum or brass lock collar. Available in 5-1/4" diameter round canopy cover, 18GA Aluminum or 18GA Copper. Square Canopy cover 5-1/4" x 5-1/4" or rectangular canopy cover 3- 1/4" x 5-1/4" made from 16GA Aluminum or 16GA Copper.

Mesh Screen
Diffuses light in window. Finish to match fixture.

Dark Top
Eliminates glow in window above shade.

Installation
For Round and Square Canopy Cover: 5" diameter, machined aluminum mounting plate with black finish. For use with 4" octagonal junction box (by others). For Rectangular Canopy Cover: 3"x5" machined aluminum mounting plate with black finish for use with single gang recessed switch box (by others).

Finish
Copper and Brass: Natural (NAT): Copper and brass components are sand blasted to expose the porous metal surface. Over time, and with exposure to the elements, the metals will naturally 'weather' resulting in a unique patina.

Also available with hand-crafted metal finishes including brown patina (BP), green patina (GP), polish (POL), and nickel plate (NIC).

Copper and brass components are also available in powder coat finishes.

Optional ceramic clear coat protection (copper and brass components only) seals and protects underlying metals and protects against discoloration, fading, and wear. Highly impervious to chemicals, solvents, and graffiti. For use with natural (NAT) finish.

Aluminum: StarGuard®, our exclusive RoHs compliant, 15 stage chromate-free process cleans and conversion coats aluminum components prior to application of Class 'A' TGIC polyester powder coating.

Warranty
5 year limited warranty.

Listings
UL tested to IESNA LM-79. UL Listed. Certified to CAN/CSA/ANSI Standards. RoHs compliant. Suitable for indoor or outdoor use. Suitable for use in wet locations. Additionally suitable for installation within 4' of the ground. IP65 Rated. Made in USA.

® Energy Star is a registered trademark of the United States Environmental Protection Agency.
Tefzel™ is trademark of The Chemours Company FC, LLC.

Section Q

Parking Analysis

Traffic Solutions
William J. Bray, P.E.
235 Bancroft Street
Portland, ME 04102
(207) 774-3603
(207) 400-6890 mobile
trafficsolutions@maine.rr.com

May 1, 2018

Parking Assessment
Proposed
"82 Hanover Street"
Commercial Mixed-Use Development

INTRODUCTION

Tom Watson & Co., Inc. is proposing to re-develop the former Portland Public Works vehicle storage facility located at 82 Hanover Street into a mixed-use commercial development project. The present development plan projects the following proposed tenant uses:

Bar/Eatery
Quality Restaurant
Industrial Space
Retail Space
Coffee Shop
Art Gallery
Fitness Center
Brewery
General Office Space

The current site design provides a 39-space parking lot located along the Kennebec Street frontage of the project site. The proposed parking lot is designed with a one-way circulation pattern, with motorists entering from Hanover Street and exiting onto Parris Street.

Based on the City's Zoning Ordinance, the proposed project requires a minimum of 62 parking spaces.

This document provides a determination of the "*average*" peak parking demand for the proposed "82 Hanover Street" building appropriately combining both local parking utilization data and national parking trends. The parking demand projections reflect an adjustment for multi-purpose or "*shared-use*" trips and an additional adjustment to account for "*other modal*" transportation choices of both employees and visitors to the site. The analytical determination of "*average*" peak parking demand for a multi-tenant development must also account for the time-of-day distribution of the actual parking demand. For example; the peak parking demand requirements of one proposed use could likely occur at 7:00 PM, whereas, the peak parking demand of a second building use may occur at 1:00 PM. The net result is that the parking demand of multiple land-uses may be able to use the same parking space at different times of the day; thereby, reducing the actual peak parking demand of the site.

The parking demand requirements of the project will be fully met with construction of the proposed on-site parking lot, parking spaces located at the nearby Schotterback & Foss building, and through parking lease agreements.

PARKING DEMAND

National parking demand data presented in the Institute of Transportation Engineers (ITE) **"Parking Generation"** publication is typically the instrument used in estimating the actual parking demand of a development site. The 4th edition, which was published in 2010, represents the most current copy of the noted ITE document. The ITE manual provides "*average*" peak parking demand rates for more than 100 land use categories including: four restaurant uses, general retail space, lodging, office space, fitness center, industrial uses, etc. Proposed development uses occasionally are more locally specific and/or are not presently accounted for in the national parking publication. In those instances, the average peak parking demand is generally determined based upon local studies conducted at similar development uses.

The "*average*" peak parking demand requirements of the proposed "82 Hanover Street" multi-tenant commercial development was estimated based upon the following proposed projected tenant space(s):

- *Unit #001 Bar/Eatery – 2,382 sf with 55 seats*
- *Unit #002 Quality Restaurant – 3,109 sf with 65 seats*
- *Unit #003 Light Industrial Space – 5,957 sf*
- *Unit #004 Retail Space – 2,194 sf*
- *Unit #005 Coffee Shop – 1,356 sf*
- *Unit #006 Retail Space – 1,425 sf*
- *Unit #007 Art Gallery – 1,425 sf*
- *Unit #008 Retail Space – 1,983 sf*
- *Unit #009 Retail Space – 2,062 sf*
- *Unit #010 Bar/Eatery – 1,796 sf with 48 seats*
- *Unit #011 Fitness Center – 3,234 sf*
- *Unit #012 Brewery – 6,531 sf*
- *Office Space #1 – 1,860 sf*
- *Office Space #2 – 1,869 sf*

Table 1a and 1b provide forecasts of "*average*" peak parking demand requirements for both a typical weekday and Saturday condition:

Table 1a

"Peak" Parking Demand Determination Summary

for

"82 Hanover Street"

(Weekday Condition)

Proposed Use	Unit No.	Building Area	Land-Use Code	Parking Space Rate	Parking Space Requirements
Bar/Eatery	001/010	103 seats	Local Data	n/a	38 spaces (2)
Quality Rest.	002	65 seats	LUC 931	0.47 spaces/seat	31 spaces
Light Industrial	003	5,957 sf	LUC 110	0.75 spaces/1,000 sf	4 spaces
Retail	004, 006, 007, 008, 009	9,251 sf	LUC 820	2.55 spaces/1,000 sf	24 spaces
Coffee Shop	005	1,356 sf	LUC 936	13.56 spaces/1,000 sf	18 spaces
Fitness Ctr.	011	3,234 sf	LUC 492	5.27 spaces/1,000 sf	17 spaces
Brewery	012	5,531 sf	Local Data	n/a	15 spaces (1)
Office	#1 & #2	3,729 sf	LUC 710	2.47 spaces/1,000 sf	9 spaces
				TOTAL =	**156**

NOTES:

(1) Parking space demand estimate based upon Portland brewery site trends

(2) Parking space demand estimate based upon Portland Street establishment

Table 1b

"Peak" Parking Demand Determination Summary

for

"82 Hanover Street"

(Saturday Condition)

Proposed Use	Unit No.	Building Area	Land-Use Code	Parking Space Rate	Parking Space Requirements
Bar/Eatery	001/010	103 seats	Local Data	n/a	27 spaces (2)
Quality Rest.	002	65 seats	LUC 931	0.49 spaces/seat	32 spaces
Light Industrial	003	5,957 sf	LUC 110	n/a	0 spaces
Retail	004, 006, 007, 008, 009	9,251 sf	LUC 820	2.87 spaces/1,000 sf	27 spaces
Coffee Shop	005	1,356 sf	LUC 936	14.44 spaces/1,000 sf	20 spaces
Fitness Ctr.	011	3,234 sf	LUC 492	2.89 spaces/1,000 sf	9 spaces
Brewery	012	6,531 sf	Local Data	n/a	44 spaces (1)
Office	#1 & #2	3,729 sf	LUC 710	n/a	0 spaces
				TOTAL =	**159**

NOTES:

(1) Parking space demand estimate based upon Portland brewery site trends

(2) Parking space demand estimate based upon Portland Street establishment

The "*average*" peak parking demand of the proposed 82 Hanover Street building is estimated at 156 spaces for a typical weekday condition and a slightly greater total of 159 spaces for a Saturday condition.

Parking Demand Adjustments: Due to the diversity of proposed uses within the "82 Hanover Street" building and the site's location within the Portland downtown area, two adjustments are applied to refine the actual parking demand of the proposed building. The first, a "*shared-use*" adjustment, accounts for multi-purpose trips that occur between one or more tenant spaces within the building. The National Cooperative Highway Research Program's (NCHRP) 684 Internal Trip Capture Estimation Tool was utilized in calculating the number of shared or captured trips generated by the proposed site. The second parking demand reduction, an "*other modes*" adjustment, assumes that a percentage of the employees and visitors to the proposed site will travel using other modes of travel versus the automobile. In consultation with the City's Peer Traffic Consultant, a 15% reduction was applied. Tables 2a and 2b below summarize the adjusted "*average*" peak parking demand for the proposed site for both a typical weekday and Saturday condition.

Table 2a

Adjusted Parking Demand Summary

for

"82 Hanover Street"

(Weekday Condition)

Proposed Use	Peak Parking Demand (Spaces)	Shared Trip Adjustment (3)	Other Modes Adjustment	Adjusted Parking Demand
Bar/Eatery	38 spaces (2)	-3	0	35
Quality Rest.	31 spaces	-3	-4	24
Light Industrial	4 spaces	0	-1	3
Retail	24 spaces	-11	-2	11
Coffee Shop	18 spaces	-4	-2	12
Fitness Ctr.	17 spaces	0	-3	14
Brewery	15 spaces (1)	0	-2	13
Offices	9 spaces	-1	-1	7
TOTAL	**156 spaces**	**-22**	**-15**	**119 spaces**

NOTES:

(1) Parking space demand estimate based upon Portland brewery site trends

(2) Parking demand estimate based upon Portland Street establishment

(3) Shared trip reduction value spread evenly amongst restaurant uses

Table 2b

Adjusted Parking Demand Summary

for

"82 Hanover Street"

(Saturday Condition)

Proposed Use	Peak Parking Demand (Spaces)	Shared Trip Adjustment (3)	Other Modes Adjustment	Adjusted Parking Demand
Bar/Eatery	27 spaces (2)	-3	0	24
Quality Rest.	32 spaces	-3	-4	25
Light Industrial	0 spaces	0	0	0
Retail	27 spaces	-11	-2	14
Coffee Shop	20 spaces	-4	-2	14
Fitness Ctr.	9 spaces	0	-1	8
Brewery	44 spaces (1)	0	-7	37
Offices	0 spaces	0	0	0
TOTAL	**159 spaces**	**-21**	**-16**	**122 spaces**

NOTES:

(1) Parking space demand estimate based upon Portland brewery site trends

(2) Parking space demand estimate based upon Portland Street establishment

(3) Shared trip reduction value spread evenly amongst restaurant uses

Hourly Parking Demand: The noted ITE Parking Generation publication provides guidance in estimating the actual parking demand of a mixed-use or multi-use project. They state the following, *"the hourly variation in parking demand for the individual land uses can result in conditions where the parking demand for one land use is high while the demand for a different land use is low. In this situation, parking demand for both land uses may be able to use the same parking space at different times of the day. The end result can be a reduction in overall peak parking demand."* The ITE Parking Generation manual provides time-of-day percent of peak demand values for each land-use category for completing this determination. The actual percent values applied in completing these calculations are presented in Table 3a and 3b as follows:

Table 3a

Hourly Peak Parking Demand (percent values) Summary

for

"82 Hanover Street"

(Weekday Condition)

Time of Day	Proposed Use (Percent Parking Demand)							
	Bar/Eatery (3)	Quality Rest.	Light Ind.	Retail	Coffee Shop	Fitness Ctr.	Brewery (1)	Office
7:00 AM	0%	0%	55%	5%	73%	20%	0%	19%
8:00 AM	0%	0%	69%	18%	100%	20%	13%	64%
9:00 AM	5%	0%	74%	38%	63%	26%	20%	91%
10:00 AM	7%	0%	75%	68%	57%	51%	20%	99%
11:00 AM	16%	20%	75%	91%	42%	48%	27%	99%
12:00 PM	49%	51%	73%	100%	40%	42%	27%	98%
1:00 PM	39%	56%	97%	97%	32%	47%	33%	96%
2:00 PM	27%	40%	100%	95%	40%	38%	40%	100%
3:00 PM	19%	27%	95%	88%	40%(2)	41%	40%	99%
4:00 PM	22%	27%	77%	78%	40%(2)	61%	40%	90%
5:00 PM	60%	39%	62%	62%	40%(2)	84%	67%	58%
6:00 PM	94%	71%	0%	0%	0%	91%	100%	0%
7:00 PM	100%	100%	0%	0%	0%	100%	93%	0%

NOTES:

(1) Hourly peak parking demand (percent values) based upon Portland brewery trends

(2) Percent parking demand values estimated

(3) Percent hourly parking demand based upon LUC #932

Table 3b

Hourly Peak Parking Demand (percent values) Summary

for

"82 Hanover Street"

(Saturday Condition)

	Proposed Use (Percent Parking Demand)							
Time of Day	**Bar/Eatery** (4)	**Quality Rest.** (3)	**Light Ind.**	**Retail**	**Coffee Shop**	**Fitness Ctr.**	**Brewery** (1)	**Office**
7:00 AM	0%	0%	0%	13%	100%	0%	0%(2)	0%
8:00 AM	0%	0%	0%	27%	90%	76%	0%(2)	0%
9:00 AM	5%	0%	0%	60%	80%	94%	10%(2)	0%
10:00 AM	7%	0%	0%	75%	65%	95%	10%(2)	0%
11:00 AM	20%	20%	0%	90%	62%	100%	20%(2)	0%
12:00 PM	41%	61%	0%	100%	40%	87%	20%(2)	0%
1:00 PM	53%	75%	0%	100%	32%	82%	20%(2)	0%
2:00 PM	46%	52%	0%	98%	40%(2)	78%	20%(2)	0%
3:00 PM	38%	38%	0%	91%	40%(2)	73%	57%	0%
4:00 PM	63%	37%	0%	76%	40%(2)	77%	100%	0%
5:00 PM	80%	30%	0%	67%	40%(2)	72%	95%	0%
6:00 PM	100%	60%	0%	0%	0%	68%	80%	0%
7:00 PM	93%	93%	0%	0%	0%	94%	50%	0%

NOTES:

(1) Hourly peak parking demand (percent values) based upon Portland brewery trends

(2) Percent parking demand values estimated

(3) Weekday Friday percent parking demand values applied

(4) Percent parking demand values based upon LUC #932

Finally, Tables 4a and 4b, which follow estimate the "*average*" hourly peak parking demand requirements of the proposed project based upon the procedures described in the ITE Parking Generation publication:

Table 4a

Hourly Peak Parking Demand Summary

for

"82 Hanover Street"

(Weekday Condition)

	Proposed Uses								
	Bar/Eatery	Quality Rest.	Light Ind.	Retail	Coffee Shop	Fitness Ctr.	Brewery	Office	Total
Adjusted Peak Parking Demand	35	24	3 spaces	11 spaces	12 spaces	14 spaces	13 spaces	7 spaces	119

Time of Day	Adjusted Hourly Parking Demand								
7:00 AM	0	0	2	1	9	3	0	1	16
8:00 AM	0	0	2	2	12	3	2	4	25
9:00 AM	2	0	2	4	8	4	3	6	29
10:00 AM	2	0	2	7	7	7	3	7	35
11:00 AM	6	5	2	10	5	7	4	7	46
12:00 PM	17	12	2	11	5	6	4	7	64
1:00 PM	14	13	3	11	4	7	4	7	63
2:00 PM	9	10	3	10	5	5	5	7	54
3:00 PM	7	6	3	10	5	6	5	7	49
4:00 PM	8	6	2	9	5	9	5	6	51
5:00 PM	21	9	2	7	5	12	9	4	69
6:00 PM	33	17	0	0	0	13	13	0	76
7:00 PM	35	24	0	0	0	14	12	0	85

Table 4b

Hourly Peak Parking Demand Summary

for

"82 Hanover Street"

(Saturday Condition)

	Proposed Uses								
	Bar/Eatery	Quality Rest.	Light Ind.	Retail	Coffee Shop	Fitness Ctr.	Brewery	Office	Total
Adjusted Peak Parking Demand	24 spaces	25 spaces	0 spaces	14 spaces	14 spaces	8 spaces	37 spaces	0 spaces	122 spaces

Time of Day	Adjusted Hourly Parking Demand								
7:00 AM	0	0	0	2	14	0	0	0	16
8:00 AM	0	0	0	4	13	6	0	0	23
9:00 AM	1	0	0	8	11	8	4	0	32
10:00 AM	2	0	0	11	9	8	4	0	34
11:00 AM	5	5	0	13	9	8	7	0	47
12:00 PM	10	15	0	14	6	7	7	0	59
1:00 PM	13	19	0	14	4	7	7	0	64
2:00 PM	11	13	0	14	6	6	7	0	57
3:00 PM	9	10	0	13	6	6	21	0	65
4:00 PM	15	9	0	11	6	6	37	0	84
5:00 PM	19	8	0	9	6	6	35	0	83
6:00 PM	24	15	0	0	0	5	30	0	74
7:00 PM	22	23	0	0	0	8	19	0	72

Accordingly, the average peak hourly parking demand of the site for a typical weekday is expected to occur after 7:00 PM with a parking demand of 85 spaces. The hourly parking demand on Saturday occurs at 4:00 PM with a parking demand of 84 spaces.

PARKING SUPPLY

The Applicant proposes to satisfy the peak parking demand requirements of the proposed 82 Hanover Street site with the following parking solutions:

- 39-space parking lot will be constructed as part of the proposed site improvements to the 82 Hanover Street building. The proposed parking lot will be cited along the Kennebec Street frontage of the site.

- 16-parking spaces at the Schotterback & Foss building located at 117 Preble Street, and

- 30 spaces will be secured through a parking space lease agreement.

The Applicant, in conversations with City staff, has requested conditional approval of the project that allows a phased approach in meeting the full parking demand requirements of the site. We suggest two phases of development; Phase I would include approvals to construct a mix of tenant spaces whose combined peak parking demand is equal to or less than 55 parking spaces. Phase II, would authorize the "*fit-up*" of the remaining tenant space and require an obligation to secure a signed leased agreement for the remaining parking spaces.

SUMMARY

- The proposed 82 Hanover Street mixed-use commercial development project that includes 14 perspective commercial tenant spaces is expected to create an "*average*" peak parking demand of 156 spaces on a typical weekday and a parking demand of 159 spaces on Saturday. The estimates of parking demand were developed based upon national parking demand rates presented in the 4th edition of the Institute of Transportation's **Parking Generation** publication and parking data collected locally within the City of Portland.

- The determination of "*average*" peak parking demand for the proposed project includes adjustments for "*shared-use*" trips; which account for the occurrence of multi-purpose trips between one or more tenant spaces and a second adjustment for "*other modes*" of travel, which considers the other modal choices (i.e. walking, transit, traveling with a co-worker, etc.) of both employees and visitors to the proposed site. The noted parking adjustments reduce the "average peak parking demand of the site to 119 weekday spaces and 122 spaces on a typical Saturday.

- The final step in forecasting the "*average*" peak parking demand requirements of the proposed 82 Hanover Street considers the "*shared parking space*" benefits of a mixed-use or multi-use project. The previously referenced **Parking Generation** publication provides the following guidance, "*the hourly variation in parking demand for the individual land uses can result in conditions where the parking demand for one land use is high while the demand for a different land use is low. In this situation, parking demand for both land uses may be able to use the same parking space at different times of the day. The end result can be a reduction in overall peak parking demand.*" The parking manual provides time-of-day percent of peak parking demand values for each land-use category, whereby, the actual hourly parking demand of the project site can be calculated. The results of this final process show the "*average*" peak parking demand of the 82 Hanover Street site occurs at 7:00 PM on a typical weekday with a projected parking demand of 85 spaces. The peak hourly parking demand for Saturday is projected at 84 spaces and will likely occur at or near 4:00 PM.

- The Applicant will meet the parking demand requirements of the project with construction of a 39-space parking lot on-site; use of 16-parking spaces located at the Schotterback & Foss building at 117 Preble Street and the remaining required parking spaces will be secured through private lease agreements.

- A request has been formerly made to the City for conditional approval of the project that allows a phased approach in meeting the parking requirements for the project. Two phases of development are

proposed; the first phase would allow construction of proposed tenant space(s) whose combined peak parking demand is equal to or less than a total of 55 parking spaces; the second phase would allow development of the remaining tenant space and require an obligation to secure the remaining parking spaces meeting the full parking demand of the site. The City has made it clear it is also open to the possibility that, with aggressive TDM efforts, follow-up assessments could determine fewer spaces are required for Phase 2.

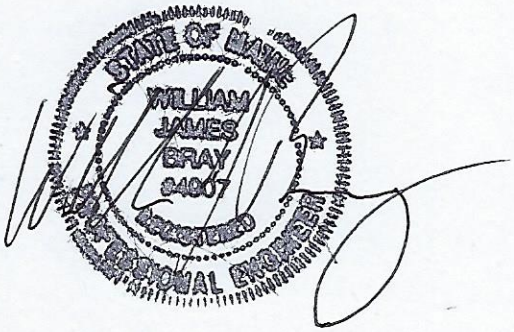

AM

Coffee By Design

	Cars IN	Cars OUT	TOTAL	Pedestrians IN	Pedestrians OUT
7:00-7:15	~~////~~ /	~~////~~ //	13		
7:15-7:30	~~////~~ //	~~////~~ ///	15		
7:30-7:45	~~////~~ ~~////~~ //	~~////~~	17		
7:45-8:00	~~////~~ /	~~////~~	11	////	/
8:00-8:15	~~////~~ /	~~////~~ /// 8	14	/	//
8:15-8:30	~~////~~ ~~////~~ ~~////~~ ////	~~////~~ //// 9	28	/	/
8:30-8:45	~~////~~ ~~////~~ ~~////~~ ~~////~~ /	~~////~~ ~~////~~ 10	31	//	/
8:45-9:00	~~////~~ ~~////~~ ~~////~~	~~////~~ /// 8	23		

96 trips

TOTAL VEHICLE TRIP

152

2 Hours

13 walking trips

317 total vehicle trips = 5 hours

27 total walking trips =

PM

Coffee By Design

	Cars IN	Cars OUT	TOTAL	Pedestrians IN	Pedestrians OUT
3:00-3:15	~~IIII~~ ~~IIII~~ B	~~IIII~~ ~~IIII~~ I	22	I	I
3:15-3:30	~~IIII~~ III	~~IIII~~ II	15		
3:30-3:45	~~IIII~~ III	~~IIII~~ III	16	I	I
3:45-4:00	~~IIII~~ I	~~IIII~~ IIII	15	II	
4:00-4:15	~~IIII~~	~~IIII~~ ~~IIII~~	15		II
4:15-4:30	II	II	4	II	
4:30-4:45	~~LHT~~ II	~~LHT~~	12		I
4:45-5:00	~~LHT~~ ~~LHT~~ I	~~LHT~~ ~~LHT~~ III	24		I
5:00-5:15	~~LHT~~ III	~~LHT~~ ~~LHT~~ II	20		
5:15-5:30	~~LHT~~	~~LHT~~ I	11	II	
5:30-5:45	II	II	4		
5:45-6:00	IIII	III	7		

68

165 trips total three hours

14 trips

The Bunker Brewery
Thursday, April 5, 2018

TOTAL PS		In	Out		Total (car)
3	4-4:15 /	1	//	2	4:00 6 Cars
1	4:15-4:30	0	/	1	
3	4:30-4:45 ///	3		0	
7	4:45-5:00 ~~////~~	5	//	2	5:00 10 Cars
4	5:-5:15 ///	3	/	1	
7	5:15-5:30 ////	4	///	3	
5	5:30-5:45 ///	3	//	2	
7	5:45-6:00 ////	4	///	3	6:00 15 Cars
2	6-6:15 //	2	/	1	
3	6:15-6:30 /	1	//	2	
7	6:30-6:45 ///	3	////	4	
2	6:45-7:00 /	1	/	1	7:00 14 cars

Bunker Brewery Saturday April 7, 2018

	IN			Out		
-3:15	𝍸 III	9	8	I	1	3:00 25 cars
-3:30	𝍸 𝍸	15	10	𝍸	5	
0-3:45	𝍸 𝍸 III	21	13	𝍸 III	8	
5-4:00	𝍸 III	59 14	8	𝍸 I	6	
00-4:15	𝍸 II	61 11	7	IIII	4	4:00 44 cars
15-4:30	𝍸	56 10	5	𝍸	5	
4:45	𝍸	46 11	5	𝍸 I	6	
4:45-5:00	𝍸 III	52 20	8	𝍸 𝍸 II	12	
5:00-5:15	𝍸 I	51 10	6	IIII	4	5:00 42 cars
5:15-5:30	IIII	56 15	4	𝍸 𝍸 I	11	
5:30-5:45	𝍸 I	56 11	6	𝍸	5	
5:45-6:00	III	9	3	𝍸 I	6	
6:00-6:15	I	9	1	𝍸 III	8	6:00 35 cars
6:15-6:30	III	10	3	𝍸 II	7	
6:30-6:45	II	6	2	IIII	4	
6:45-7:00	III	6	3	III	3	7:00

NCHRP 684 Internal Trip Capture Estimation Tool			
Project Name:	58 Fore Street	**Organization:**	Gorrill Palmer
Project Location:	Portland, Maine	**Performed By:**	ET
Scenario Description:	Max Build Out	**Date:**	13-Jul
Analysis Year:	2016	**Checked By:**	RED
Analysis Period:	**AM Street Peak Hour**	**Date:**	

Table 1-A: Base Vehicle-Trip Generation Estimates (Single-Use Site Estimate)

Land Use	Development Data (*For Information Only*)			Estimated Vehicle-Trips		
	ITE LUCs[1]	Quantity	Units	Total	Entering	Exiting
Office	710	56,588	SF	136	123	13
Retail	814	76,103	SF	57	34	23
Restaurant		-	SF	0	0	0
Cinema/Entertainment		-	SF	0	0	0
Residential	220	647	Units	330	66	264
Hotel	310	170	Units	95	57	38
All Other Land Uses[2]		1,800	SF	0	0	0
Total				618	280	338

Table 2-A: Mode Split and Vehicle Occupancy Estimates

Land Use	Entering Trips			Exiting Trips		
	Veh. Occ.	% Transit	% Non-Motorized	Veh. Occ.	% Transit	% Non-Motorized
Office						
Retail						
Restaurant						
Cinema/Entertainment						
Residential						
Hotel						
All Other Land Uses[2]						

Table 3-A: Average Land Use Interchange Distances (Feet Walking Distance)

Origin (From)	Destination (To)					
	Office	Retail	Restaurant	Cinema/Entertainment	Residential	Hotel
Office						
Retail						
Restaurant						
Cinema/Entertainment						
Residential						
Hotel						

Table 4-A: Internal Person-Trip Origin-Destination Matrix*

Origin (From)	Destination (To)					
	Office	Retail	Restaurant	Cinema/Entertainment	Residential	Hotel
Office		4	0	0	0	0
Retail	5		0	0	1	0
Restaurant	0	0		0	0	0
Cinema/Entertainment	0	0	0		0	0
Residential	4	3	0	0		0
Hotel	4	1	0	0	0	

Table 5-A: Computations Summary

	Total	Entering	Exiting
All Person-Trips	618	280	338
Internal Capture Percentage	7%	8%	7%
External Vehicle-Trips[3]	574	258	316
External Transit-Trips[4]	0	0	0
External Non-Motorized Trips[4]	0	0	0

Table 6-A: Internal Trip Capture Percentages by Land Use

Land Use	Entering Trips	Exiting Trips
Office	11%	31%
Retail	24%	26%
Restaurant	N/A	N/A
Cinema/Entertainment	N/A	N/A
Residential	2%	3%
Hotel	0%	13%

[1]Land Use Codes (LUCs) from *Trip Generation Manual*, published by the Institute of Transportation Engineers.

[2]Total estimate for all other land uses at mixed-use development site is not subject to internal trip capture computations in this estimator.

[3]Vehicle-trips computed using the mode split and vehicle occupancy values provided in Table 2-A.

[4]Person-Trips

*Indicates computation that has been rounded to the nearest whole number.

Estimation Tool Developed by the Texas A&M Transportation Institute

Project Name:	58 Fore Street
Analysis Period:	**Scenario 1 - AM Street Peak Hour**

Table 7-A: Conversion of Vehicle-Trip Ends to Person-Trip Ends

Land Use	Table 7-A (D): Entering Trips			Table 7-A (O): Exiting Trips		
	Veh. Occ.	Vehicle-Trips	Person-Trips*	Veh. Occ.	Vehicle-Trips	Person-Trips*
Office	1.00	123	123	1.00	13	13
Retail	1.00	34	34	1.00	23	23
Restaurant	1.00	0	0	1.00	0	0
Cinema/Entertainment	1.00	0	0	1.00	0	0
Residential	1.00	66	66	1.00	264	264
Hotel	1.00	57	57	1.00	38	38

Table 8-A (O): Internal Person-Trip Origin-Destination Matrix (Computed at Origin)

Origin (From)	Destination (To)					
	Office	Retail	Restaurant	Cinema/Entertainment	Residential	Hotel
Office		4	8	0	0	0
Retail	7		3	0	3	0
Restaurant	0	0		0	0	0
Cinema/Entertainment	0	0	0		0	0
Residential	5	3	53	0		0
Hotel	29	5	3	0	0	

Table 8-A (D): Internal Person-Trip Origin-Destination Matrix (Computed at Destination)

Origin (From)	Destination (To)					
	Office	Retail	Restaurant	Cinema/Entertainment	Residential	Hotel
Office		11	0	0	0	0
Retail	5		0	0	1	0
Restaurant	17	3		0	3	2
Cinema/Entertainment	0	0	0		0	0
Residential	4	6	0	0		0
Hotel	4	1	0	0	0	

Table 9-A (D): Internal and External Trips Summary (Entering Trips)

Destination Land Use	Person-Trip Estimates			External Trips by Mode*		
	Internal	External	Total	Vehicles[1]	Transit[2]	Non-Motorized[2]
Office	13	110	123	110	0	0
Retail	8	26	34	26	0	0
Restaurant	0	0	0	0	0	0
Cinema/Entertainment	0	0	0	0	0	0
Residential	1	65	66	65	0	0
Hotel	0	57	57	57	0	0
All Other Land Uses[3]	0	0	0	0	0	0

Table 9-A (O): Internal and External Trips Summary (Exiting Trips)

Origin Land Use	Person-Trip Estimates			External Trips by Mode*		
	Internal	External	Total	Vehicles[1]	Transit[2]	Non-Motorized[2]
Office	4	9	13	9	0	0
Retail	6	17	23	17	0	0
Restaurant	0	0	0	0	0	0
Cinema/Entertainment	0	0	0	0	0	0
Residential	7	257	264	257	0	0
Hotel	5	33	38	33	0	0
All Other Land Uses[3]	0	0	0	0	0	0

[1]Vehicle-trips computed using the mode split and vehicle occupancy values provided in Table 2-A

[2]Person-Trips

[3]Total estimate for all other land uses at mixed-use development site is not subject to internal trip capture computations in this estimator

*Indicates computation that has been rounded to the nearest whole number.

NCHRP 684 Internal Trip Capture Estimation Tool			
Project Name:	58 Fore Street	**Organization:**	Gorrill Palmer
Project Location:	Portland, Maine	**Performed By:**	ET
Scenario Description:	Max Build Out	**Date:**	13-Jul
Analysis Year:	2016	**Checked By:**	RED
Analysis Period:	**PM Street Peak Hour**	**Date:**	

Table 1-P: Base Vehicle-Trip Generation Estimates (Single-Use Site Estimate)

Land Use	Development Data (*For Information Only*)			Estimated Vehicle-Trips		
	ITE LUCs[1]	Quantity	Units	Total	Entering	Exiting
Office	710	56,588	SF	131	19	112
Retail	814	76,103	SF	207	94	113
Restaurant		-	SF	0	0	0
Cinema/Entertainment		-	SF	0	0	0
Residential	220	647	Units	401	260	141
Hotel	310	170	Units	100	55	45
All Other Land Uses[2]		1,800	SF	0	0	0
Total				839	428	411

Table 2-P: Mode Split and Vehicle Occupancy Estimates

Land Use	Entering Trips			Exiting Trips		
	Veh. Occ.	% Transit	% Non-Motorized	Veh. Occ.	% Transit	% Non-Motorized
Office						
Retail						
Restaurant						
Cinema/Entertainment						
Residential						
Hotel						
All Other Land Uses[2]						

Table 3-P: Average Land Use Interchange Distances (Feet Walking Distance)

Origin (From)	Destination (To)					
	Office	Retail	Restaurant	Cinema/Entertainment	Residential	Hotel
Office						
Retail						
Restaurant						
Cinema/Entertainment						
Residential						
Hotel						

Table 4-P: Internal Person-Trip Origin-Destination Matrix*

Origin (From)	Destination (To)					
	Office	Retail	Restaurant	Cinema/Entertainment	Residential	Hotel
Office		8	0	0	2	0
Retail	2		0	0	29	6
Restaurant	0	0		0	0	0
Cinema/Entertainment	0	0	0		0	0
Residential	6	9	0	0		4
Hotel	0	2	0	0	0	

Table 5-P: Computations Summary

	Total	Entering	Exiting
All Person-Trips	839	428	411
Internal Capture Percentage	16%	16%	17%
External Vehicle-Trips[3]	703	360	343
External Transit-Trips[4]	0	0	0
External Non-Motorized Trips[4]	0	0	0

Table 6-P: Internal Trip Capture Percentages by Land Use

Land Use	Entering Trips	Exiting Trips
Office	42%	9%
Retail	20%	33%
Restaurant	N/A	N/A
Cinema/Entertainment	N/A	N/A
Residential	12%	13%
Hotel	18%	4%

[1]Land Use Codes (LUCs) from *Trip Generation Manual*, published by the Institute of Transportation Engineers.

[2]Total estimate for all other land uses at mixed-use development site is not subject to internal trip capture computations in this estimator.

[3]Vehicle-trips computed using the mode split and vehicle occupancy values provided in Table 2-P.

[4]Person-Trips

*Indicates computation that has been rounded to the nearest whole number.

Estimation Tool Developed by the Texas A&M Transportation Institute

Project Name:	58 Fore Street
Analysis Period:	**Scenario 1 - PM Street Peak Hour**

Table 7-P: Conversion of Vehicle-Trip Ends to Person-Trip Ends

Land Use	Table 7-P (D): Entering Trips			Table 7-P (O): Exiting Trips		
	Veh. Occ.	Vehicle-Trips	Person-Trips*	Veh. Occ.	Vehicle-Trips	Person-Trips*
Office	1.00	19	19	1.00	112	112
Retail	1.00	94	94	1.00	113	113
Restaurant	1.00	0	0	1.00	0	0
Cinema/Entertainment	1.00	0	0	1.00	0	0
Residential	1.00	260	260	1.00	141	141
Hotel	1.00	55	55	1.00	45	45

Table 8-P (O): Internal Person-Trip Origin-Destination Matrix (Computed at Origin)

Origin (From)	Destination (To)					
	Office	Retail	Restaurant	Cinema/Entertainment	Residential	Hotel
Office		22	4	0	2	0
Retail	2		33	5	29	6
Restaurant	0	0		0	0	0
Cinema/Entertainment	0	0	0		0	0
Residential	6	59	30	0		4
Hotel	0	7	31	0	1	

Table 8-P (D): Internal Person-Trip Origin-Destination Matrix (Computed at Destination)

Origin (From)	Destination (To)					
	Office	Retail	Restaurant	Cinema/Entertainment	Residential	Hotel
Office		8	0	0	10	0
Retail	6		0	0	120	9
Restaurant	6	47		0	42	39
Cinema/Entertainment	1	4	0		10	1
Residential	11	9	0	0		7
Hotel	0	2	0	0	0	

Table 9-P (D): Internal and External Trips Summary (Entering Trips)

Destination Land Use	Person-Trip Estimates			External Trips by Mode*		
	Internal	External	Total	Vehicles[1]	Transit[2]	Non-Motorized[2]
Office	8	11	19	11	0	0
Retail	19	75	94	75	0	0
Restaurant	0	0	0	0	0	0
Cinema/Entertainment	0	0	0	0	0	0
Residential	31	229	260	229	0	0
Hotel	10	45	55	45	0	0
All Other Land Uses[3]	0	0	0	0	0	0

Table 9-P (O): Internal and External Trips Summary (Exiting Trips)

Origin Land Use	Person-Trip Estimates			External Trips by Mode*		
	Internal	External	Total	Vehicles[1]	Transit[2]	Non-Motorized[2]
Office	10	102	112	102	0	0
Retail	37	76	113	76	0	0
Restaurant	0	0	0	0	0	0
Cinema/Entertainment	0	0	0	0	0	0
Residential	19	122	141	122	0	0
Hotel	2	43	45	43	0	0
All Other Land Uses[3]	0	0	0	0	0	0

[1]Vehicle-trips computed using the mode split and vehicle occupancy values provided in Table 2-P

[2]Person-Trips

[3]Total estimate for all other land uses at mixed-use development site is not subject to internal trip capture computations in this estimator

*Indicates computation that has been rounded to the nearest whole number.

ISA BISTRO Thursday

4/19 ~~ISA Portland~~

	Cars In	Cars Out	People In	People Out	Total	Total Cars 5
3:00-3:15	I	I			2	5
3:15-3:30	0	II			2	3
3:30-3:45	I			III	4	4
3:45-4:00			II		2	4
4:00-4:15		I			1	3
4:15-4:30	I		III		4	4
4:30-4:45	~~IIII~~		I		6	9
4:45-5:00		I			1	8
5:00-5:15	II	II			4	8
5:15-5:30	II	2	I	II	5	10
5:30-5:45	II	I 3		II	5	11 Peak Hour
5:45-6:00	III	II 5		III	8	12
6:00-6:15	IIII	II 6			7	14
6:15-6:30	II	II			4	14
6:30-6:45		III			3	11
6:45-7:00	I				1	12

in (4) hours 59

13% walkers

Total of 38 seats

INTERSECTION WITH NUMBERED MOVEMENTS:

ISA BISTRO

DATE April 21, 2018
DAY OF WEEK Saturday
WEATHER Sunny
REMARKS:

COUNT SUMMARY
MOVEMENT

4/21/18 PM	1 In Cars	2 Out Cars	3 In Pedestrians	4 Out Pedestrians	5 Total Cars
3:00 3:15	I	I		IIII 6	2
3:15 3:30		I	II	3	1
3:30 3:45		I		II 3	0
3:45 4:00	I		I	II 4	1
4:00 4:15				0	1
4:15 4:30	I			I 2	2
4:30 4:45				0	2
4:45 5:00	II		III	5	4
5:00 5:15	III	I	~~IIII~~ I	10	6
5:15 5:30	IIII			4	10
5:30 5:45	I	II		3	9
5:45 6:00			I	1	9
6:00 6:15	I	II		3	8
6:15 6:30	III	II		5	9
6:30 6:45				III 3	9
6:45 7:00	II	I		3	10

PEAK HOUR COUNT

TIME: To:

55 (4) hour total
vehicle trips
+ 13 (parts of peds.)

19% walkers

Table 1a
Hourly Peak Parking Demand
Phase I
"82 Hanover Street"
(Weekday Condition)

	Proposed Uses					
	Unit 002 Quality Rest.	Unit 003 Light Ind.	Units 007 & 008 Retail	Unit 012 Brewery	Office #1	Total
Adjusted Peak Parking Demand	25 spaces	3 spaces	6 spaces	13 spaces	4 spaces	51 spaces

Time of Day	Adjusted Hourly Parking Demand					
7:00 AM	0	2	1	0	1	4
8:00 AM	0	2	1	2	2	7
9:00 AM	0	2	2	3	3	10
10:00 AM	0	2	4	3	4	13
11:00 AM	5	2	5	4	4	20
12:00 PM	12	2	5	4	4	27
1:00 PM	13	3	5	4	4	29
2:00 PM	10	3	5	5	4	27
3:00 PM	6	3	5	5	4	23
4:00 PM	6	2	4	5	3	20
5:00 PM	9	2	4	9	2	26
6:00 PM	17	0	0	13	0	30
7:00 PM	24	0	0	12	0	36

Table 1b
Hourly Peak Parking Demand Summary
Phase I
"82 Hanover Street"
(Saturday Condition)

	Proposed Uses					
	Unit 002 Quality Rest.	Unit 003 Light Ind.	Units 007 & 008 Retail	Unit 012 Brewery	Office #1	Total
Adjusted Peak Parking Demand	25 spaces	0 spaces	6 spaces	37 spaces	0 spaces	68 spaces

Time of Day	Adjusted Hourly Parking Demand					
7:00 AM	0	0	1	0	0	1
8:00 AM	0	0	2	0	0	2
9:00 AM	0	0	4	4	0	8
10:00 AM	0	0	5	4	0	9
11:00 AM	5	0	6	7	0	18
12:00 PM	15	0	6	7	0	28
1:00 PM	19	0	6	7	0	32
2:00 PM	13	0	6	7	0	26
3:00 PM	10	0	6	21	0	37
4:00 PM	9	0	5	37	0	51
5:00 PM	8	0	5	35	0	48
6:00 PM	15	0	0	30	0	45
7:00 PM	23	0	0	19	0	42

Att. R

82 Hanover Street

Transportation Demand Management Plan

May 4, 2018

Summary

Tom Watson & Company, LLC, having entered into a purchase and sale agreement with the City of Portland, provides this Transportation Demand Management (TDM) Plan for 82 Hanover Street. This 1.25-acre parcel spans the full block between Hanover, Kennebec, Parris and a former segment of Lancaster Street in Portland's Bayside neighborhood and the B7 zone. The existing 40,768 ft^2 two-story building was previously the Portland Public Works municipal garage and is also known as the General Store.

82 Hanover is a unique project in the City of Portland and a rare opportunity for urban infill and redevelopment. The proposal is to convert the existing building to multiple new tenant uses, ranging from office space, retail, light industrial, food and beverage establishments, and a fitness center.

The 82 Hanover Street TDM Plan aims to help accommodate this new growth and benefit the local transportation system through support of transportation alternatives and reductions in the rate of single-occupancy vehicle travel to and from the site. *In addition to the 5% expected shared-use and 15% existing multi-modal rate reductions within the trip and parking generation projections, the plan sets the following initial targets:*

- a further 5% reduction in vehicle trips over first 3-5 years after the site is fully occupied
- a further 5% reduction in parking demand over the first 3-5 years after the site is fully occupied
- a further 3% increase in employee and visitor multi-modal trips by 3-5 years after the site is fully occupied – i.e., a total of 18% of employee and visitor trips made to the site will be via transit, carpooling or vanpooling, by bicycle or on foot

These targets will be reassessed at the end of the first full year of operations at 82 Hanover Street.

82 Hanover Street Site

- 1.25 acre mixed-use urban infill site in lower Bayside
- **40,768 gross square footage**, with the following proposed uses:
  - Office space: 3,729 ft^2
  - Food & beverage: 8,643 ft^2
  - Retail: 8,326 ft^2
  - Fitness Center: 3,234 ft^2
  - Light industrial: 11,488 ft^2
- ***Trip reduction target:*** In addition to initial 5% shared-use and 15% existing multi-modal rate reductions within trip generation projections, a further 5% reduction 3-5 years after full occupancy - resulting from TDM program; 6 weekday morning peak trips, 7 weekday evening peak trips, 10 Saturday evening peak trips
- ***Parking reduction target:*** In addition to initial 5% shared-use and 15% existing multi-modal rate reductions within parking demand projections, a further 5% TDM-related reduction in average peak hourly parking demand 3-5 years after full occupancy; 4 spaces
- ***Multi-modal target:*** In addition to 15% existing multi-modal rate, a further 3% increase in employee & visitor trips via transit, carpooling or vanpooling, by bicycle & on foot within 3-5 years after full occupancy – a total 18% multi-modal rate
- Will reassess targets at end of year one of 82 Hanover Street occupancy

Cushman Transportation Consulting, LLC, 94 Beckett Street, 2nd Floor, Portland, ME 04101
Tel: (207) 200-1910 E-mail: sarah@sarahcushman.com www.sarahcushman.com

1. Site Description and Transportation Context

Tom Watson & Company, LLC is purchasing and remodeling the existing 40,768 ft^2 two-story building at 82 Hanover Street to house thirteen tenant spaces and the offices of Port Property Management.

The adaptive reuse of the structure at this location, in the heart of the Bayside neighborhood, supports the multi-modal objectives of the B7 zone in which it stands – where dense urban form, mixed-uses, and the utilization of transportation beyond the automobile are strongly encouraged. 82 Hanover and its TDM initiatives are part of Bayside's continued renaissance and align well with the goals of *A New Vision for Bayside* and the *Bayside Transportation Master Plan*.

While the site is located within what has traditionally been a light industrial zone with some missing sidewalk links and crossings that aren't always ADA accessible, it is still relatively pedestrian and bicycle-friendly. This is in part because of continued sidewalk, crossing and bike lane improvements being made in the area and the generally strong sidewalk network and lower-speed street grid of the Portland Peninsula.

82 Hanover also sits in close proximity to the Back Cove Trail and the Marginal Way, Forest Avenue and Portland Street bike lanes. In addition, the site is immediately adjacent to the proposed Bayside Trail extension and is near the proposed separated bike lanes on Park Avenue and the eventual Deering Oaks Park section of the Neighborhood Byway network. Moreover, the building is right across the street from Port City Bikes, which prioritizes service to bicycle commuters.

With increasing retail development, such as Bayside Bowl next door, and existing and further proposed housing nearby, lower Bayside is growing in its sense of place and improved street feel. 82 Hanover will add to these enhancements and the human scale of the pedestrian environment through its new tenant signage, awnings, sidewalk entries, active windows and store fronts, landscaping and improved lighting encircling the building and block – as well as the outdoor patios, seating and pedestrian access on the former segment of Lancaster Street.

In terms of transit service, 82 Hanover is three blocks from the METRO Routes 2, 4 and 5, serving the significant transportation corridors and residential neighborhoods off of Forest Avenue, Brighton Avenue and Outer Congress. The building is also four blocks from Congress Street with access to METRO, South Portland, Lakes Region and Shuttlebus/ZOOM bus routes and a seven minute walk to the METRO Pulse transit hub on Elm Street. In addition, Portland and METRO have long eyed improving the Route 8 service of the Portland Peninsula. This and other transit

improvement recommendations have been made in the recent *Bayside Transportation Master Plan*. These could enable increased ridership of peninsula residents and workers to 82 Hanover Street. A visual map of the larger multi-modal context of the site can be viewed in *Appendix A*.

In addition, the nature of the proposed restaurant, brewery tasting room and bar/eateries tend to attract people coming in groups. Couples, groups of friends and families most often arrive in passenger vehicles carrying more than one person. Thus, carpooling is likely to be the method that a good number of visitors use to access the site.

In terms of shared mobility, the use of transportation network companies (TNCs) such as Uber and Lyft has grown substantially in recent years and is a likely and viable transportation option, especially for evening 82 Hanover Street visitors. A trip via a TNC does not reduce traffic congestion, unless it combines what would normally be two or more vehicle trips; however, it does reduce parking demand. Moreover, there is a UhaulCarshare vehicle located within four blocks of the site, at 409 Cumberland Avenue/Mechanic Street.

2. TDM Coordinator

Highly successful TDM programs share three vital characteristics: (1) they are dynamic: piloting strategies, assessing impacts, and modifying tactics as needed; (2) they are rigorously supported and monitored by local governing bodies, in this case, the City of Portland; and (3) they are managed by committed and enthusiastic staff who are responsible for overseeing, promoting and sustaining the program.

TDM Coordinator

Jennifer Munroe, Property Manager for 82 Hanover Street
Port Property Management
jennifer@portpropmgt.com
(207) 233-8418

Tom Watson & Co. is committed to reducing drive-alone employee and visitor automobile trips, improving multi-modal safety, and easing traffic congestion and area parking demand near 82 Hanover Street through its TDM efforts. Of great help for TDM program consistency at this particular site is the fact that the developer, Tom Watson, is also the Senior Manager of Port Property Management, which will be relocating its operations to 82 Hanover. In addition, it is worth noting that with Port Property's planned move, the company's current single-story building at 104 Grant Street is freed up to become additional transit-oriented redevelopment - with a four-story building consisting of 23 housing units just three blocks from Congress Street transit access.

As such, the developer has designated Jennifer Munroe, Property Manager for 82 Hanover Street for Port Property Management, as the TDM Coordinator for 82 Hanover. She is charged with coordinating the TDM plan implementation and monitoring and making any needed changes. Port Property has a long history of encouraging employee wellness through initiatives such as offering a discount for an employee's gym membership. It sees this TDM program as another opportunity to improve employee physical and financial health.

The company will provide the TDM Coordinator with a stipend to support the work of leading the site's ongoing TDM efforts. Acknowledging that roles and responsibilities change over time in any position, Port Property will use the first few months of TDM implementation to enumerate the TDM Coordinator's responsibilities in detail for any other staff to uphold the responsibility of the position. The Coordinator's contact information is: Jennifer Munroe, Property Manager for 82 Hanover Street, jennifer@portpropmgt.com, (207) 233-8418. Cushman Transportation Consulting, LLC has already met with Ms. Munroe and other Port Property staff regarding the plan and initial steps for the TDM program's implementation.

Day-to-day operations and monitoring of the TDM plan will be conducted in-house by the appointed 82 Hanover TDM Coordinator. Port Property will retain the services of a TDM consultant to review initiatives, problem-solve and develop new strategies if and when necessary.

The 82 Hanover TDM coordinator is responsible for:

- Ensuring strategic parking management and monitoring parking usage
- Coordinating site and tenant TDM policies and incentives
- Encouraging greater use of preferred modes – walking, bicycling, carpooling and taking bus or rail transit - through central online platform, social media and site-wide promotion
- Overseeing/conducting surveying of tenant employees and visitors
- Overseeing annual site parking and traffic observations
- Filing annual reports and updating the plan with the City
- Exploration of additional TDM strategies, as needed

3. Trip and Parking Reduction Targets

Tom Watson & Co. has hired Cushman Transportation Consulting, LLC (CTC) and Traffic Solutions to assist with its TDM planning process. CTC has conducted recent research on TDM programs at evolving, multifaceted development sites similar to 82 Hanover and Thompson's Point (e.g., in California and Northern Virginia) – including aspects of setting and managing TDM targets. This outreach informs the following trip reduction, parking reduction and multi-modal goals.

Projected Trip Generation & Parking Demand

On behalf of 82 Hanover, Traffic Solutions created ITE trip generation and parking demand projections and conducted additional local traffic and parking studies required by the City to assess the potential impact of 82 Hanover's redevelopment. The projections include an initial 5% shared-use reduction in trips for people who will visit multiple tenants at the site during one outing, as well as a 15% reduction for the number of people who would use non drive-alone modes of transportation to reach the site under current conditions (pre-TDM implementation). This percentage was set in consultation with the City's Traffic Consultant.

Projections & Targets

- ***Trip reduction target:*** In addition to initial 5% shared-use and 15% existing multi-modal rate reduction within the trip generation projections, a further 5% reduction in trips over first 3-5 years after full occupancy resulting from TDM program; 6 weekday morning peak trips, 7 weekday evening peak trips, 10 Saturday evening peak trips
- ***Parking reduction target:*** In addition to initial 5% shared-use and 15% existing multi-modal rate reduction within the parking demand projections, a further 5% TDM-related reduction in average peak hourly parking demand over first 3-5 years after full occupancy; 4 spaces
- ***Multi-modal target:*** In addition to 15% existing multi-modal rate, a further 3% increase in employee & visitor trips via transit, carpooling or vanpooling, by bicycle & on foot within 3-5 years after full occupancy – a total of 18% multimodal
- Will reassess targets at end of year one of 82 Hanover Street occupancy

Accordingly, the proposed 82 Hanover Street multi-tenant commercial project can be expected to generate approximately 113 trips in the AM peak hour; 149 trips during the PM peak hour and 197 trips late in the afternoon on a typical Saturday. Per the parking demand projections analysis, the average peak hourly parking demand of the site for a typical weekday is expected to occur after 7p.m. with a parking demand of 85 spaces. The average peak hourly parking demand on Saturday occurs at 4p.m. with a parking demand of 84 spaces.

With the City's proposed realignment of Kennebec Street, 82 Hanover Street's existing parking space availability has now been reduced to 39 spaces. The site will have the use of 16 spaces at the 117 Lofts on Preble Street, which Port Property owns and manages, and the developer is in the process of seeking leases for the additional required spaces within 1,500 feet of the site. Pending the Tom Watson & Co. purchase of the abutting 44 Hanover Street parcel, there is strong likelihood that 82 Hanover will also be able to lease as many as 50 parking spaces from 44 Hanover.

The developer has requested conditional approval for the project that allows a phased approach in meeting the parking requirements for 82 Hanover. Two phases of development are proposed. Phase 1 would allow construction of proposed tenant space(s) whose combined peak parking demand is equal to or less than a total of 55 parking spaces. Phase 2 would allow development of the remaining tenant space and require an obligation to secure the remaining parking spaces, meeting the full parking demand of the site. The City has made clear it is also open to the possibility that, with the assertive TDM efforts outlined in this plan, follow-up parking assessments could determine fewer spaces are required for Phase 2.

117 Lofts on Preble Street

Trip Reduction Target

In addition to the initial 5% shared-use and 15% existing multi-modal rate reductions in projected trips to the site - and given the multi-modal accessibility of 82 Hanover Street - Port Property's TDM efforts should enable a further 5% reduction in employee and visitor trips by the end of 3-5 years. The TDM team plans to revisit this reduction target after the first full year of operations at 82 Hanover.

Parking Reduction Target

In addition to the initial 5% shared-use and 15% existing multi-modal rate reductions to the parking demand projections for the site, and with assertive parking management and implementation of TDM strategies and incentives, a further achievable parking demand reduction is 5% by the end of 3-5 years. The parking demand target will also be revisited after 82 Hanover has been in operation for a year.

Multi-Modal Target

82 Hanover is setting an overall target of 18% of employees and visitors making multi-modal trips to the site, by 3-5 years after full occupancy. That is, giving the estimated existing multi-modal rate of 15%, this would be an additional 3% increase in employees and visitors who reach the site via transit, carpooling or vanpooling, by bicycle, on foot or through some combination of these modes.

From other TDM experiments in North America, it is also clear that individuals' use of various alternate modes shift over time as different employees and visitors come and go. For example, an employee who uses transit might move to a different job off-site or a commuter who walks might switch to bicycling. In another instance, a couple who in the past has biked to the site may begin to drive together at times with their growing family. Therefore, it seems most useful for 82 Hanover's TDM efforts to address the specific needs of transit users, carpoolers, bicyclists and walkers and set an overarching multi-modal trip target for the site.

82 Hanover plans to closely monitor existing trends to attain a reasonable mode-shift goal over time.

4. Trip and Parking Reduction Strategies

In the table beginning on the following page, Tom Watson & Co. proposes a number of best-practice and sensible parking and trip reduction strategies for 82 Hanover's TDM Plan. These are based on the development team's understanding of the site's transportation context, potential employers and visitors and the usefulness of various TDM efforts. For example, strategically managed and shared parking will produce the strongest results for reducing single-occupancy vehicle trips to the site.

In addition, the developers acknowledge the various needs of different multi-modal commuters. For instance, tenant employees who walk to work or bicycle or carpool with children are more able to do so if they have on-site, secure storage for larger commuting gear. Moreover, even if current drive alone commuters have to pay for parking, likely this will need to be combined with tangible financial incentives like transit pass subsidies or discounted parking for carpoolers. These are vital to encourage people to experiment with other ways of getting to work.

Another critical component for the success of 82 Hanover's TDM Plan is a carefully thought-out marketing plan that regularly engages tenant employees and visitors regarding preferred modes of transportation and provides easily accessible information. This work also builds the site's TDM culture and the sense of multi-modal travel as the social norm. 82 Hanover has begun designing a marketing strategy that complements other area Portland TDM work to promote walking, bicycling, rideshare, the use of public transit and alternate work arrangements.

Finally, Greater Portland Council of Governments and the City of Portland are reexamining the need for an area Transportation Management Association (TMA) to benefit private sector employers. TMAs are generally public-private entities that assist employers with TDM implementation and monitoring, advocate for improved transit and act as brokers for services such as vanpools and shuttles. Tom Watson & Co. plans to support the development of a TMA, if found to be feasible, and have 82 Hanover Street participate as a member.

Infrastructure	
Transit Access	• Work with other DPW redevelopment sites, METRO and the City of Portland regarding proposed bus stop improvements at Forest and Park Avenue
Pedestrian Access	• Reconstruct sidewalk segments on Hanover and Parris Streets near parking lot • Construction of sidewalk or path on Lancaster Court, ensuring a continued pedestrian connection between the existing lengths of Lancaster Street • Improvements to existing building lighting to improve sidewalk illumination • Secure storage on 1st floor for larger commute gear, e.g.: strollers, handcarts • On-site showers within each tenant space • Work with City to integrate 82 Hanover and other lower Bayside destinations with any pedestrian wayfinding associated with the Back Cove Trail, the Bayside Trail extension, and the proposed Deering Oaks Park section of the Neighborhood Byway network. • Integrate project with City sidewalk and crossing improvements on Kennebec Street and the construction of the Bayside Trail extension

Bicycle Access	• 36 bicycle parking spaces:
	  ○ 4 on-street bicycle parking spaces (Hanover and Parris)
	  ○ 14 external spaces on Lancaster Court
	  ○ 18 secure and weatherproof spaces on 1st Floor for regular bicycles and larger-size or heavier bike commuting set-ups, such as: cargo bicycles, electric bikes and bicycles with trailers or child bicycling attachments
	• On-site showers within each tenant space
	• Depending on demand, work with City to install seasonal bike corral for summer and shoulder seasons
	• Work with City to integrate 82 Hanover with any bicycle wayfinding associated with the Back Cove Trail, Bayside Trail extension, Portland Street bike lanes, and Park Avenue protected bike lanes
	• Committed to meeting a higher demand for on-street bike parking if needed

Remote Parking	• Additional 16 parking spaces at 117 Preble Street with pedestrian access • Phase 2: acquire shared use parking leases with nearby sites • At 3 years of full site occupancy, explore possible management of 82 Hanover and other lower Bayside parking resources through Unified Parking Partners
Shared Mobility	• Secure storage on 1st floor for larger commuting gear, e.g.: car seats • Carshare – UhaulCarshare vehicle within 4 blocks; may explore additional on-street carshare vehicle to serve 82 Hanover Street and other new development in lower Bayside • Landlord/tenant co-sponsorship of partial subsidy for multi-modal tenant employees who need to use carshare or Transportation Network Companies (Uber/Lyft) during work day • Reduction in visitor parking demand with Uber/Lyft service to reach retail tenants such as restaurant, brewery and bar

Lease Agreements	• Inclusion of language in lease agreements concerning site TDM requirements and benefits to tenants and their employees
Incentives	
Parking Pricing/Cash Out/Incentives	• Parking unbundled from tenant leases; charging tenants for parking • Landlord/tenant co-sponsorship of one-time monetary payments for employees that opt out of parking • Preferential Parking program through GO MAINE – carpoolers are prioritized for parking spaces at 82 Hanover and receive special permits; and/or offer discounted parking for carpoolers • Explore possibility of per diem payment for parking, best practice for strategic parking management • Explore flexible parking pricing if it becomes clear there are times when there is reduced parking demand
Transit Subsidies	• On-site transit pass purchase available at Port Property office • Co-subsidized partial or full monthly and multi-ride bus passes for tenant employees • One-time financial incentives to give up a parking space and start using transit
Carpool/Rideshare Subsidies	• Site registration with GO MAINE for ridematching/carpooling opportunities and to provide access to Emergency Ride Home benefit • One-time financial incentives to start new carpool or recruit new carpool members • Offer co-subsidized monthly voucher for carpool/vanpool on par with transit pass subsidy • Within two years of full site occupancy, do Enterprise vanpool zip code analysis of tenant employees (and possibly other nearby redeveloped sites) to assess potential vanpools; if viable, offer partial subsidy for vanpool participants
Bicycle/Pedestrian Subsidies	• Retail tenants encouraged to become participating members of Bicycle Benefits • Provide Bicycle Benefits memberships for tenant employees • Partial subsidy of one annual bicycle maintenance visit to Port City Bikes or other bike shop for 82 Hanover tenant employees • Partial subsidy of one annual walking shoe purchase for pedestrian commuters • Reimburse tenant employees for bicycle safety courses • Partial or full subsidy of tenant employee bikeshare memberships when/if bikeshare starts in Portland

Flexible Work	• For applicable employees, Port Property offers:
	  ○ telecommuting options for one or more days per week
	  ○ flexible work hour scheduling to arrive at work before or leave work after peak commute times
	  ○ alternate shift arrangements – e.g., ten hours work days for a four day week
	• Within 2 years of full occupancy, landlord assessment of other appropriate

	tenants to encourage regarding flexible work practices
Targeted Promotions	• 1st year: monthly raffle for multi-modal staff with co-sponsorship of benefits such as vacation time, gift cards, etc. • Thereafter, campaigns 1-2 times per year, tied to regional and national events like Way 2 GO MAINE and National Bike Month - and offering similar rewards; e.g., 82 Hanover will organize an internal competition of tenants for the Way 2 GO MAINE business-to-business commuter challenge
Information	

Education on Travel Choice	• Develop TDM print/electronic resource for dialogue with tenants and visitors
	• Review of TDM program with tenant as part of lease agreement
	• TDM orientation packets for incoming tenant employees and new hires
	• At least quarterly communications with tenants and their employees – e.g. through e-newsletter, tenant door posters, etc.
	• Active TDM web page on 82 Hanover web site – to which all tenants should link to in communications with customers. Page to include:
	  ○ Current maps, routes, and schedules for public transit routes near the site
	  ○ Live-time transit info from Southern Maine Transit Tracker
	  ○ Information on GO MAINE ride-matching, and Emergency Ride Home benefit
	  ○ Walk, bicycle & trail routes to and near 82 Hanover
	  ○ Links to other available transportation options
	  ○ Listing of facilities available for bicyclists, carpoolers, pedestrians, transit riders and vanpoolers
	  ○ All TDM incentives available to tenant employees and visitors
	  ○ Contact information for TDM Coordinator, responsible for program management at the site
	• Annual employee and visitor surveys will also serve as education tool

Promotion of Alternate Modes	• Using site and tenant social media to build social proof of others doing the desired TDM actions (with posts from people taking action – e.g., posting a photo of taking the bus to work - vs. just likes or retweets of the idea of using preferred modes) • Commuter challenges and incentive campaigns • At least once per quarter: recognizing employees and visitors who reduce the traffic impact of the development through social media, tenant door posters, newsletter, email or other announcements.

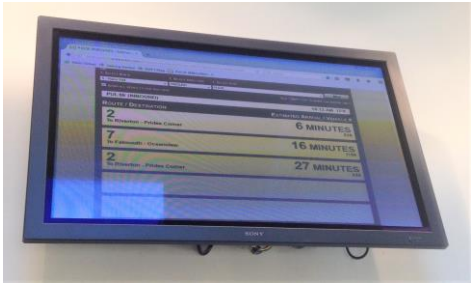

5. Plan for Monitoring, Data Collection and Reporting

Recognizing that the implementation of a TDM Plan is a dynamic process, 82 Hanover's TDM Coordinator will monitor the TDM Plan's components to assess whether the site is achieving the trip and parking reduction targets listed above. 82 Hanover will evaluate the value of various subsidies for preferred modes and make improvements. Another important piece will be to determine the flexibility of employees and visitors to utilize various travel modes to access the site.

The 82 Hanover team also plans to consult the upcoming 2018 release of an Urban Land Institute resource reviewing latest site TDM program implementation and monitoring methods. In addition, 82 Hanover will explore possible use of the national TRIMMS model (Trip Reduction Impacts of Mobility Management Strategies). This would be helpful for 82 Hanover's internal assessment, to estimate the impacts of the various transportation demand initiatives and provide a program cost effectiveness assessment, including the net program benefit and a benefit-to-cost ratio analysis.

Surveying & Monitoring

- Employee and visitor surveys once annually for first 3 years, then every two years thereafter
- Conduct traffic and parking observations to cross-reference with the annual surveying
- Reassess parking and trip monitoring at 2 year mark
- Track tenant employees' use of multi-modal subsidies
- Annual report to City

82 Hanover will conduct annual employee and visitor surveys that provide quantitative data (e.g., trip, parking and mode split) and qualitative data (e.g., perception of 82 Hanover's alternate transportation access and TDM programming). The site will carry out these surveys once annually for first three years of full occupancy and then every two years thereafter. The data collection and surveys will produce comparable data from year to year and be available for compilation with other sites' travel data by a third party, such as the City. The following will be included in the monitoring assessment.

Employee Surveys

The survey will be developed in consultation with the city's TDM manager and conform to overall city TDM modeling and planning. Survey questions will include:

- Employee's zip code of residence
- Mode of travel to and from work and any use of alternate work arrangements
- If parking personal vehicle, where
- Type of participation in TDM program and/or use of any employee TDM benefits
- Preferences, barriers or concerns with modes of travel
- TDM marketing effectiveness
- To help report any business benefits from 82 Hanover's TDM efforts, the survey may also collect data regarding: any changes in employee satisfaction with travel options, changes in levels of stress, impacts on employee turnover/absenteeism, increases in savings due to participation in subsidies, etc.
- Space to add comments

Visitor Surveys

The survey will be developed in consultation with the city's TDM manager and conform to overall city TDM modeling and planning. 82 Hanover will work with tenants on strategies for gathering retail visitor data, e.g.,

surveying people in line at a brewery release and providing raffle prizes and other survey incentives to promote the surveys and generate responses. Visitor survey questions will likely include:

- Visitor's zip code of residence
- Mode of travel to and from the site
- If by car, specify as a driver or a passenger
- If driver, ascertain how many passengers and parking location
- Check boxes of specific preferences, barriers or concerns with using other modes
- Check boxes for which tenants were visited
- Space to add comments

Note: the use of these survey tools will also assist 82 Hanover with its TDM education efforts. That is, the questions themselves help people think differently about their transportation behavior. The surveys will also provide a reminder and link to 82 Hanover's online transportation page for further information about options.

Parking and Traffic Observations

Once annually, the TDM Coordinator will also organize site observations of vehicle and bicycle parking and vehicle trips to the site, during peak morning and evening commute times on one weekday and during the late morning and evening on one weekend day.

Use of Multi-Modal Subsidies

The TDM Coordinator will track the number of tenant employees utilizing the landlord-tenant subsidies for transit passes, bicycle maintenance or walking shoes, carpool and vanpool vouchers, preferential parking and/or discounted parking for carpoolers, bicycle safety courses and Bicycle Benefits memberships. In addition, the coordinator will tally the number of tenant employees who are members of GO MAINE. If the site engages with a future bikeshare operation, UhaulCarShare or a transportation network company, the coordinator will assess that usage as well.

Annual Report

The TDM Coordinator will then produce an annual TDM Report to meet the City's monitoring requirements. The report will include:

a. the above parking and traffic site observations and survey data
b. details of that year's TDM operations – including management, strategies, marketing and any new infrastructure development
c. lessons learned and any changes in the TDM plan during the year
d. plans for the following year

6. Appendices

A. Multi-modal Context Map for 82 Hanover Street

Appendix A

Multi-modal Context Map for 82 Hanover Street

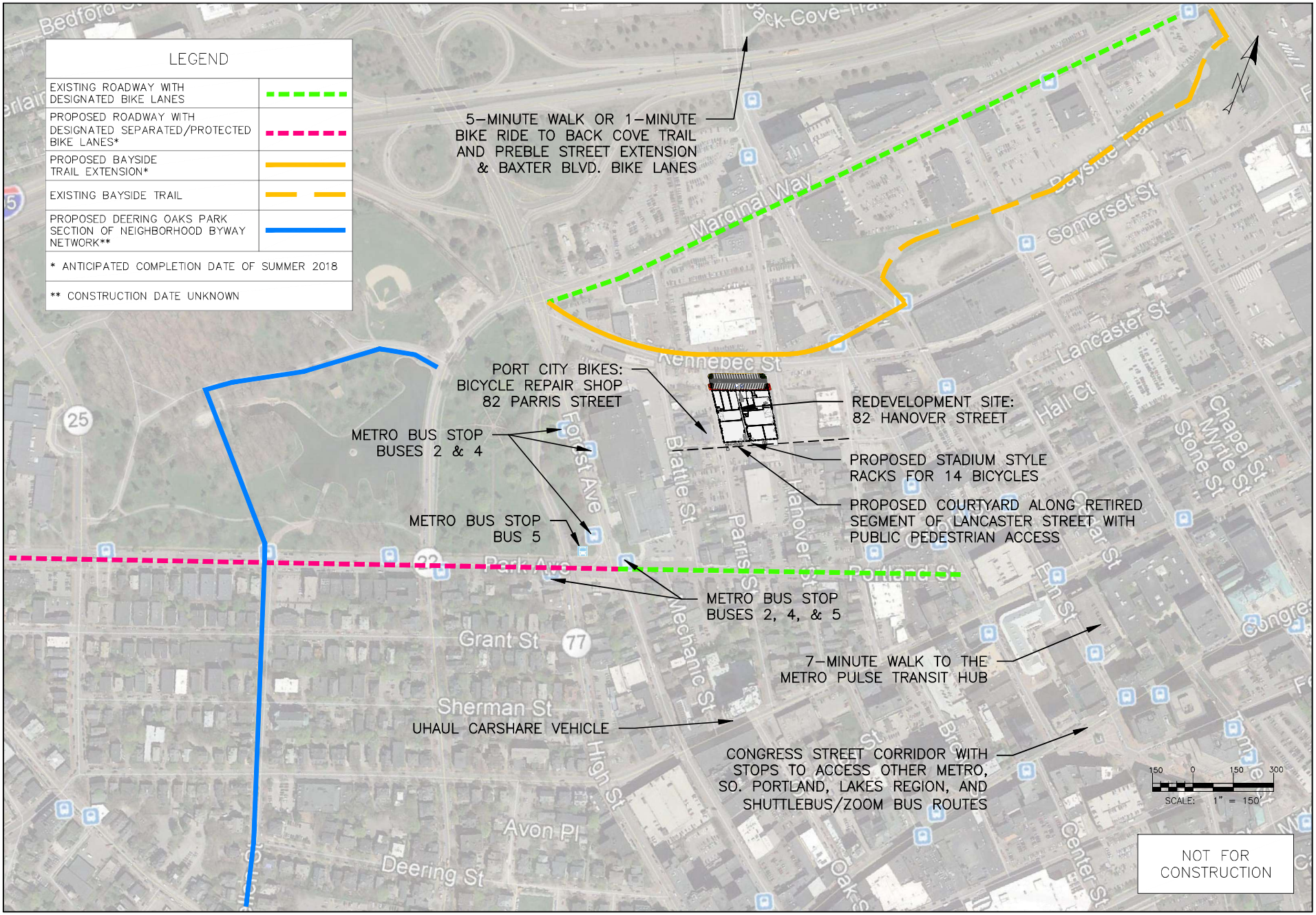

ISSUED FOR	BY	DATE
TDM	WHS	7/2/18

DRAWING NAME: MULTIMODAL EXHIBIT

PROJECT NAME: 82 HANOVER STREET REDEVELOPMENT

CLIENT: TOM WATSON & CO., LLC
PORTLAND, ME

ACORN ENGINEERING, INC.

THE DRAWING, DATA, NOTES, AND SPECIFICATIONS, WHICH ACORN ENGINEERING, INC. HAS ACCORDED TO THIS PROJECT, ARE AUTHENTIC, AUTHORIZED PROPERTY OF ACORN ENGINEERING, INC. AND ARE NOT TO BE USED WITHOUT PERMISSION TO ACORN ENGINEERING, INC.

ACORN ENGINEERING, INC.
158 DANFORTH ST. PORTLAND MAINE 04102
(207) 775-2658

FILE:	1093_CIVIL
JN:	1093
SCALE:	1"=150'
DESIGNED BY:	SJL
DRAWN BY:	SJL
CHECKED BY:	WHS

DRAWING NO.
EX.

Att. S

Provisionally Adopted 1/10/00

Department of Transportation
Traffic Engineering Division
16 State House Station
Augusta, Maine 04333
Telephone: 207-287-3775

FOR MDOT USE 1/2000
ID #

Total Fees:
Date Received:

****

PERMIT APPLICATION – TRAFFIC
TRAFFIC MOVEMENT PERMIT, 23 M.R.S.A. § 704 – A

Please type or print:

This application is for:

Traffic 100-200 PCE's _____
Traffic 200 + PC-E's _X_

Name of Applicant: **Tom Watson & Co., LLC**

Address: **188 State Street, 3rd Floor, Portland ME. 04101** **Telephone:** **(207) 252-0358**

Name of local contact or agent: **William J. Bray, P.E., Traffic Solutions**

Address: **235 Bancroft Street, Portland, Maine 04102**
Telephone: **(207) 400-6890**

Name and type of development: **Mixed-Use Building**

Location of development including road, street, or nearest route number: **82 Hanover Street, Portland, Maine**

City/Town/Plantation: **Portland**, County: **Cumberland**, Tax Map **34G** Lot **001 & 005**

Do you want a consolidated review with DEP pursuant to 23 M.R.S.A. § 704-A (7)? Yes ____ No **X**

Was this development started prior to obtaining a traffic permit? **No**

Is the project located in an area designated as a growth area (as defined in M.R.S.A. title 30 – A, chapter 187)?
Yes **X** No_____

Is this project located within a compact area of an urban compact municipality? Yes X No _____

Is this development or any portion of the site currently subject to state or municipal enforcement action? **No**

Existing DEP or MDOT permit number (if applicable): **N/A**

Name(s) of DOT staff person(s) contacted concerning this application:_____

Name(s) of DOT staff person(s) present at the scoping meeting for 200+ applications: _____

NOTICE OF INTENT TO FILE

Please take notice that:

Tom Watson & Co., LLC
188 State Street, 3rd Floor
Portland, ME 04101

Is intending to file a Traffic Movement Permit application with the Maine Department of Transportation pursuant to the provisions of 23 M.R.S.A. § 704 – A on or about

April 9, 2018

The application is for:

A proposed multi-tenant commercial development project located within the former Portland Public Works equipment storage facility at 82 Hanover Street. The proposed project converts the existing building to a number of new tenant uses including: retail, restaurant(s), a brewery, fitness center and a light industrial use.

The proposed project is expected to generate the following peak hour trips:

Weekday AM Peak Hour of Street	**= 114 trips**
Weekday PM Peak Hour of Street	**= 158 trips**
Saturday Peak Hour	**= 207 trips**

At the following location: **82 Hanover Street, Portland, Maine**

A request for a public hearing must be received by the Department(City), in writing, no later than 20 days after the application is found by the Department(City) to be complete and is accepted for processing. Public comment on the application will be accepted throughout the processing of the application.

The application will be filed for public inspection at the Department of Transportation Division 1 **(Scarborough)** office, during normal working hours. A copy of the application may also be seen at the municipal offices in:

City of Portland – Planning Department
Portland, Maine

Written public comments may be sent to the Department of Transportation, Traffic Engineering Division, 16 State House Station, Augusta, Maine 04333.

1/2000

CERTIFICATION

The traffic engineer responsible for preparing this application and/or attaching pertinent [illegible] and traffic information hereto, by signing below, certifies that the application for traffic a[illegible] and accurate to the best of his/her knowledge.

Signature: _____ Re/Cert/Lic No.: 4907

Name (print): William Bray

Date: Apr. 19, 2018

If the signature below is not the applicant's signature, attach letter of agent authorization signed by applicant.

"I certify under penalty of law that I have personally examined the information submitted in this document and all attachments thereto and that, based on my inquiry of those individuals immediately responsible for obtaining the information, I believe the information is true, accurate, and complete. I authorize the Department to enter the property that is the subject of this application, at reasonable hours, including buildings, structures or conveyances on the property, to determine the accuracy of any information provided herein. I am aware there are significant penalties for submitting false information, including the possibility of fine and imprisonment."

_____ 4.9.2018

Signature of applicant Date

"82 Hanover Street"

Property Abutters

Atlantic Bayside Holdings LLC
50 Portland Pier
Portland, ME 04101

Kennebec Krossing LLC
PO Box 779
Portland ME 04104

BOPO LLC
58 Alder Street
Portland, ME 04101

City of Portland
389 Congress Street
Portland, ME 04101

Forq LLC,
PO Box 4351
Portland, ME 04101

New Systems Realty LLC
PO Box 2
Portland, ME 04112

Ross Y. Furman
PO Box 2
Portland, ME 04112

SECTION 1

A. SITE PLAN

Tom Watson & Co., LLC is proposing to re-develop the former Portland Public Works equipment storage facility into a multi-tenant commercial development project. The proposed project will convert the existing structure into a number of tenant uses including: retail, light industrial space, a brewery, restaurant(s), coffee shop, general office space and a fitness center.

A total of 39 on-site parking spaces are proposed in support of the proposed development project.

Vehicular access to the "82 Hanover Street" site is maintained from both Hanover and Parris Street. Pedestrian access is provided from all four sides of the existing building.

B. EXISTING AND PROPOSED SITE USES

The existing site (1.33 acres in total area) was previously the Portland Public Works vehicle storage garage. The 40,768 square-foot two-story brick building is presently accessed through overhead doors onto both Parris and Hanover Streets.

Tom Watson & Co., LLC is proposing to re-develop the former Portland Public Works equipment storage facility into a multi-tenant commercial development project. The proposed project will convert the existing structure into a number of tenant uses including: retail, light industrial space, a brewery, restaurant(s), coffee shop, general office space and a fitness center.

A total of 39 on-site parking spaces are proposed in support of the proposed development project.

Vehicular access to the "82 Hanover Street" site is maintained from both Hanover and Parris Street. Pedestrian access is provided from all four sides of the existing building.

SECTION 1

C. SITE AND VICINITY BOUNDARIES

The attached regional map depicts the proposed project site at 82 Hanover Street.

THIS PLAN SHALL NOT BE MODIFIED WITHOUT WRITTEN PERMISSION FROM ACORN ENGINEERING, INC. ANY ALTERATIONS, AUTHORIZED OR OTHERWISE, SHALL BE AT THE USER'S SOLE RISK AND WITHOUT LIABILITY TO ACORN ENGINEERING, INC.

DRAWING NO.
R-1

FILE:	CIVIL
DATE:	3/29/18
JN:	1093
SCALE:	NTS
DESIGN BY:	SJL
DRAWN BY:	SJL
CHECKED BY:	WHS

ACORN ENGINEERING, INC
ACORN ENGINEERING, INC. P.O. BOX 3372
PORTLAND, MAINE 04104 (207) 775-2655

DRAWING NAME:
REGIONAL VICINITY MAP

PROJECT NAME:
82 HANOVER STREET

CLIENT:
TOM WATSON & CO., LLC

ISSUED FOR	BY DATE
TMP	SJL 3/29/18
	REV. DATE

D. PROPOSED USES IN THE GENERAL VICINITY OF THE PROPOSED DEVELOPMENT

Traffic generated by projects that have been approved by the City of Portland, yet are not open, must be included in the estimate of pre-development traffic. The City's Planning Staff will be contacted to determine what other development projects potentially impacting the street system adjacent to the proposed site should be accounted for in assessing the traffic impacts of the proposed project.

SECTION 1

E. TRIP GENERATION

The proposed mixed-use commercial project will include the following tenant space(s):

- Unit #001 Bar/Eatery – 2,382 sf
- Unit #002 Quality Restaurant – 3,109 sf
- Unit #003 Light Industrial Space – 5,957 sf
- Unit #004 Retail Space – 2,194 sf
- Unit #005 Coffee Shop – 1,356 sf
- Unit #006 Retail Space – 1,425 sf
- Unit #007 Art Gallery – 1,425 sf
- Unit #008 Retail Space – 1,983 sf
- Unit #010 Bar/Eatery – 1,796 sf
- Unit #011 Fitness Center – 3,234 sf
- Unit #012 Brewery – 6,531 sf
- Office Space #1 – 1,860 sf
- Office Space #2 – 1,869 sf

Trip generation for the proposed mixed-use building is determined based upon a combination of both existing local trip data and trip tables presented in the ninth edition of the Institute of Transportation Engineers "**TRIP GENERATION**" publication.

Table 1 below provides a summary of peak hour trip generation for the proposed "82 Hanover Street" project.

Table 1
"82 Hanover Street" Development
Trip Generation

Proposed Use	Building Unit No.	Building Unit Area	Land-Use Code	AM Peak Hour		PM Peak Hour		Saturday Peak Hour	
				Trip Rate	Trips	Trip Rate	Trips	Trip Rate	Trips
Bar/Eatery	001/010	4,178 sf	LUC 925	n/a	0	11.34/1,000sf	47	15.49/1,000sf (4)	65
Quality Restaurant	002	3,190 sf	LUC 931	0.81/1,000sf	3	7.49/1,000sf	23	10.82/1,000sf	35
Light Industrial	003	5,957 sf	LUC110	0.92/1,000sf	5	0.97/1,000sf	6	0.14/1,000sf	1
Retail	004,006,007, 008,009	9,251 sf	LUC 826	2.71/1,000sf (3)	25	2.71/1,000sf	25	2.71/1,000sf (3)	25
Coffee Shop	005	1,356 sf	Local Data (1)	n/a	96	n/a	68	n/a	68 (5)
Fitness Ctr.	011	3,234 sf	LUC 492	1.41/1,000sf	5	3.53/1,000sf	11	2.78/1,000sf	9
Brewery	012	6,531 sf	Local Data (2)	n/a	0	n/a	23	n/a	61
Office	#1 & #2	3,729 sf	LUC 715	1.80/1,000sf	6	1.74/1,000sf	6	n/a	0
TOTAL					**140**		**209**		**264**

NOTES

(1) Trip estimate based upon local survey data collected at a Diamond Street Coffee Shop
(2) Trip estimate based upon local survey data collected at a Westfield Street brewery
(3) AM and Saturday trip rate based upon PM peak hour trip rate
(4) Saturday trip rate based upon PM Peak hour generator rate
(5) Saturday trip rate based upon weekday PM peak hour data collected at Diamond Street Coffee Shop

The "*82 Hanover Street*" multi-tenant commercial project is expected to generate a total of 140 trips during the AM peak hour, 209 trips in the weekday evening peak hour and 264 trips during a typical Saturday peak hour.

Coffee By Design

AM

	Cars IN	Cars OUT	TOTAL	Pedestrians IN	Pedestrians OUT
7:00-7:15	~~////~~ /	~~////~~ //	13		
7:15-7:30	~~////~~ //	~~////~~ ///	15		
7:30-7:45	~~////~~ ~~////~~ //	~~////~~	17		
7:45-8:00	~~////~~ /	~~////~~	11	////	/
8:00-8:15	~~////~~ /	~~////~~ /// 8	14	/	//
8:15-8:30	~~////~~ ~~////~~ ~~////~~ ////	~~////~~ //// 9	28	/	/
8:30-8:45	~~////~~ ~~////~~ ~~////~~ ~~////~~ /	~~////~~ ~~////~~ 10	31	//	/
8:45-9:00	~~////~~ ~~////~~ ~~////~~	~~////~~ /// 8	23		

96 trips

TOTAL VEHICLE TRIP

152

2 Hours

13 walking trips

317 total vehicle trips = 5 hours

77 total walking trips =

PM

Coffee By Design

	Cars IN	Cars OUT	TOTAL	Pedestrians IN	Pedestrians OUT
3:00-3:15	5	22	22	1	1
3:15-3:30	8	15	15		
3:30-3:45	8	16	16	1	1
3:45-4:00	6	15	15	2	
4:00-4:15	4	15	15		2
4:15-4:30	2	2	4	2	
4:30-4:45	7	5	12		1
4:45-5:00	11	13	24		1
5:00-5:15	8	12	20		
5:15-5:30	5	6	11	2	
5:30-5:45	2	2	4		
5:45-6:00	4	3	7		

68

165 trips total three hours

14 trips

The Bunker Brewery
Thursday, April 5, 2018

TOTAL CARS		In	Out		Total Cars
3	4-4:15 I	1	II	2	4:00 6 Cars
1	4:15-4:30	0	I	1	
3	4:30-4:45 III	3		0	
7	4:45-5:00 ~~IIII~~	5	II	2	5:00 10 cars
4	5:-5:15 III	3	I	1	
7	5:15-5:30 IIII	4	III	3	
5	5:30-5:45 III	3	II	2	
7	5:45-6:00 IIII	4	III	3	6:00 15 cars
2	6-6:15 II	2	I	1	
3	6:15-6:30 I	1	II	2	
7	6:30-6:45 III	3	IIII	4	
2	6:45-7:00 I	1	I	1	7:00 14 cars

April 7, 2018

	IN			Out		
-3:15	𝍸 III	9	8	I	1	3:00 25 cars
-3:30	𝍸 𝍸	15	10	𝍸	5	
-3:45	𝍸 𝍸 III	21	13	𝍸 III	8	
-4:00	𝍸 III	59 14	8	𝍸 I	6	
-4:15	𝍸 II	61 11	7	IIII	4	4:00 44 cars
-4:30	𝍸	56 10	5	𝍸	5	
4:45	𝍸	46 11	5	𝍸 I	6	
4:45-5:00	𝍸 III	52 20	8	𝍸 𝍸 II	12	
5:00-5:15	𝍸 I	51 10	6	IIII	4	5:00 42 cars
5:15-5:30	IIII	56 15	4	𝍸 𝍸 I	11	
5:30-5:45	𝍸 I	56 11	6	𝍸	5	
5:45-6:00	III	9	3	𝍸 I	6	
6:00-6:15	I	9	1	𝍸 III	8	6:00 35 cars
6:15-6:30	III	10	3	𝍸 II	7	
6:30-6:45	II	6	2	IIII	4	
6:45-7:00	III	6	3	III	3	7:00

F. TRIP ADJUSTMENTS

The following trip adjustments are determined appropriate for the proposed mixed-use project:

Shared-Use Adjustment

Due to the diversity of proposed uses within the "82 Hanover Street" site a number of the estimated vehicle trips, in actuality, visit more than one tenant space without leaving the building. These multi-purpose trips, if not accounted for, overestimate the traffic impact of the proposed site.

The National Cooperative Highway Research Program's (NCHRP) 684 Internal Trip Capture Estimation Tool was utilized in estimating the number of shared or captured trips generated by the proposed project. Copies of the spreadsheets used in the analysis follow.

Other Modes of Transportation Adjustment

Both employees and visitors alike are expected to utilize other modes of transportation traveling to/from the proposed "*82 Hanover Street*" commercial development site. These other transportation modes include transit, ridesharing, bicycle travel or walking. Traffic Solutions, in concert with Cushman Transportation Consulting, LLC are projecting that approximately 15% of the total trip generation of proposed site will in fact use a mode of transportation other than the auto. A similar value of 15% was recently approved in the conduct of the traffic assessment for the proposed Bayside Bowl site.

The following tables provide a summary of the trip adjustments for each of the three peak hour time periods:

Peak Hour Trip Generation
Adjustment Summary
AM Peak Hour

Building Use	Total Trips	Shared Trip Adjustment	Other Modes Adjustment	Total Adjusted Trips
Bar/Eatery	0	0	0	**0**
Quality Rest.	3	0	0	**3**
Light Industrial	5	0	-1	**4**
Retail	25	-2	-3	**20**
Coffee Shop	96	-3	-14	**79**
Fitness Center	5	0	-1	**4**
Brewery	0	0	0	**0**
Office	6	-1	-1	**4**
TOTAL	**140**	**-6**	**-20**	**114**

NCHRP 684 Internal Trip Capture Estimation Tool			
Project Name:	82 Hanover Street	**Organization:**	Traffic Solutions
Project Location:	Portland	**Performed By:**	WJB
Scenario Description:		**Date:**	28-Mar-18
Analysis Year:	2018	**Checked By:**	
Analysis Period:	**AM Street Peak Hour**	**Date:**	

Table 1-A: Base Vehicle-Trip Generation Estimates (Single-Use Site Estimate)

Land Use	Development Data (*For Information Only*)			Estimated Vehicle-Trips		
	ITE LUCs[1]	Quantity	Units	Total	Entering	Exiting
Office	715	3,729	SF	7	6	1
Retail	826	9,251	SF	25	14	11
Restaurant	936	1,356	SF	96	61	35
Cinema/Entertainment				0		
Residential				0		
Hotel				0		
All Other Land Uses[2]		23,090		0		
Total				128	81	47

Table 2-A: Mode Split and Vehicle Occupancy Estimates

Land Use	Entering Trips			Exiting Trips		
	Veh. Occ.	% Transit	% Non-Motorized	Veh. Occ.	% Transit	% Non-Motorized
Office						
Retail						
Restaurant						
Cinema/Entertainment						
Residential						
Hotel						
All Other Land Uses[2]						

Table 3-A: Average Land Use Interchange Distances (Feet Walking Distance)

Origin (From)	Destination (To)					
	Office	Retail	Restaurant	Cinema/Entertainment	Residential	Hotel
Office						
Retail						
Restaurant						
Cinema/Entertainment						
Residential						
Hotel						

Table 4-A: Internal Person-Trip Origin-Destination Matrix*

Origin (From)	Destination (To)					
	Office	Retail	Restaurant	Cinema/Entertainment	Residential	Hotel
Office		0	0	0	0	0
Retail	0		1	0	0	0
Restaurant	1	1		0	0	0
Cinema/Entertainment	0	0	0		0	0
Residential	0	0	0	0		0
Hotel	0	0	0	0	0	

Table 5-A: Computations Summary

	Total	Entering	Exiting
All Person-Trips	128	81	47
Internal Capture Percentage	5%	4%	6%
External Vehicle-Trips[3]	122	78	44
External Transit-Trips[4]	0	0	0
External Non-Motorized Trips[4]	0	0	0

Table 6-A: Internal Trip Capture Percentages by Land Use

Land Use	Entering Trips	Exiting Trips
Office	17%	0%
Retail	7%	9%
Restaurant	2%	6%
Cinema/Entertainment	N/A	N/A
Residential	N/A	N/A
Hotel	N/A	N/A

[1]Land Use Codes (LUCs) from *Trip Generation Manual*, published by the Institute of Transportation Engineers.
[2]Total estimate for all other land uses at mixed-use development site is not subject to internal trip capture computations in this estimator.
[3]Vehicle-trips computed using the mode split and vehicle occupancy values provided in Table 2-A.
[4]Person-Trips
*Indicates computation that has been rounded to the nearest whole number.

Estimation Tool Developed by the Texas A&M Transportation Institute

Project Name:	82 Hanover Street
Analysis Period:	**AM Street Peak Hour**

Table 7-A: Conversion of Vehicle-Trip Ends to Person-Trip Ends

Land Use	Table 7-A (D): Entering Trips			Table 7-A (O): Exiting Trips		
	Veh. Occ.	Vehicle-Trips	Person-Trips*	Veh. Occ.	Vehicle-Trips	Person-Trips*
Office	1.00	6	6	1.00	1	1
Retail	1.00	14	14	1.00	11	11
Restaurant	1.00	61	61	1.00	35	35
Cinema/Entertainment	1.00	0	0	1.00	0	0
Residential	1.00	0	0	1.00	0	0
Hotel	1.00	0	0	1.00	0	0

Table 8-A (O): Internal Person-Trip Origin-Destination Matrix (Computed at Origin)

Origin (From)	Destination (To)					
	Office	Retail	Restaurant	Cinema/Entertainment	Residential	Hotel
Office		0	1	0	0	0
Retail	3		1	0	2	0
Restaurant	11	5		0	1	1
Cinema/Entertainment	0	0	0		0	0
Residential	0	0	0	0		0
Hotel	0	0	0	0	0	

Table 8-A (D): Internal Person-Trip Origin-Destination Matrix (Computed at Destination)

Origin (From)	Destination (To)					
	Office	Retail	Restaurant	Cinema/Entertainment	Residential	Hotel
Office		4	14	0	0	0
Retail	0		31	0	0	0
Restaurant	1	1		0	0	0
Cinema/Entertainment	0	0	0		0	0
Residential	0	2	12	0		0
Hotel	0	1	4	0	0	

Table 9-A (D): Internal and External Trips Summary (Entering Trips)

Destination Land Use	Person-Trip Estimates			External Trips by Mode*		
	Internal	External	Total	Vehicles[1]	Transit[2]	Non-Motorized[2]
Office	1	5	6	5	0	0
Retail	1	13	14	13	0	0
Restaurant	1	60	61	60	0	0
Cinema/Entertainment	0	0	0	0	0	0
Residential	0	0	0	0	0	0
Hotel	0	0	0	0	0	0
All Other Land Uses[3]	0	0	0	0	0	0

Table 9-A (O): Internal and External Trips Summary (Exiting Trips)

Origin Land Use	Person-Trip Estimates			External Trips by Mode*		
	Internal	External	Total	Vehicles[1]	Transit[2]	Non-Motorized[2]
Office	0	1	1	1	0	0
Retail	1	10	11	10	0	0
Restaurant	2	33	35	33	0	0
Cinema/Entertainment	0	0	0	0	0	0
Residential	0	0	0	0	0	0
Hotel	0	0	0	0	0	0
All Other Land Uses[3]	0	0	0	0	0	0

[1]Vehicle-trips computed using the mode split and vehicle occupancy values provided in Table 2-A

[2]Person-Trips

[3]Total estimate for all other land uses at mixed-use development site is not subject to internal trip capture computations in this estimator

*Indicates computation that has been rounded to the nearest whole number.

NCHRP 684 Internal Trip Capture Estimation Tool			
Project Name:	82 Hanover Street	**Organization:**	Traffic Solutions
Project Location:	Portland	**Performed By:**	WJB
Scenario Description:		**Date:**	28-Mar-18
Analysis Year:	2018	**Checked By:**	
Analysis Period:	**PM Street Peak Hour**	**Date:**	

Table 1-P: Base Vehicle-Trip Generation Estimates (Single-Use Site Estimate)

Land Use	Development Data (*For Information Only*)			Estimated Vehicle-Trips		
	ITE LUCs[1]	Quantity	Units	Total	Entering	Exiting
Office	715	3,729	SF	6	1	5
Retail	826	9,251	SF	25	11	14
Restaurant	925	8,724	SF	115	66	49
Cinema/Entertainment				0		
Residential				0		
Hotel				0		
All Other Land Uses[2]		15,722		0		
Total				146	78	68

Table 2-P: Mode Split and Vehicle Occupancy Estimates

Land Use	Entering Trips			Exiting Trips		
	Veh. Occ.	% Transit	% Non-Motorized	Veh. Occ.	% Transit	% Non-Motorized
Office						
Retail						
Restaurant						
Cinema/Entertainment						
Residential						
Hotel						
All Other Land Uses[2]						

Table 3-P: Average Land Use Interchange Distances (Feet Walking Distance)

Origin (From)	Destination (To)					
	Office	Retail	Restaurant	Cinema/Entertainment	Residential	Hotel
Office						
Retail						
Restaurant						
Cinema/Entertainment						
Residential						
Hotel						

Table 4-P: Internal Person-Trip Origin-Destination Matrix*

Origin (From)	Destination (To)					
	Office	Retail	Restaurant	Cinema/Entertainment	Residential	Hotel
Office		1	0	0	0	0
Retail	0		4	0	0	0
Restaurant	0	6		0	0	0
Cinema/Entertainment	0	0	0		0	0
Residential	0	0	0	0		0
Hotel	0	0	0	0	0	

Table 5-P: Computations Summary

	Total	Entering	Exiting
All Person-Trips	146	78	68
Internal Capture Percentage	15%	14%	16%
External Vehicle-Trips[3]	124	67	57
External Transit-Trips[4]	0	0	0
External Non-Motorized Trips[4]	0	0	0

Table 6-P: Internal Trip Capture Percentages by Land Use

Land Use	Entering Trips	Exiting Trips
Office	0%	20%
Retail	64%	29%
Restaurant	6%	12%
Cinema/Entertainment	N/A	N/A
Residential	N/A	N/A
Hotel	N/A	N/A

[1]Land Use Codes (LUCs) from *Trip Generation Manual*, published by the Institute of Transportation Engineers.

[2]Total estimate for all other land uses at mixed-use development site is not subject to internal trip capture computations in this estimator.

[3]Vehicle-trips computed using the mode split and vehicle occupancy values provided in Table 2-P.

[4]Person-Trips

*Indicates computation that has been rounded to the nearest whole number.

Estimation Tool Developed by the Texas A&M Transportation Institute

Project Name:	82 Hanover Street
Analysis Period:	**PM Street Peak Hour**

Table 7-P: Conversion of Vehicle-Trip Ends to Person-Trip Ends

Land Use	Table 7-P (D): Entering Trips			Table 7-P (O): Exiting Trips		
	Veh. Occ.	Vehicle-Trips	Person-Trips*	Veh. Occ.	Vehicle-Trips	Person-Trips*
Office	1.00	1	1	1.00	5	5
Retail	1.00	11	11	1.00	14	14
Restaurant	1.00	66	66	1.00	49	49
Cinema/Entertainment	1.00	0	0	1.00	0	0
Residential	1.00	0	0	1.00	0	0
Hotel	1.00	0	0	1.00	0	0

Table 8-P (O): Internal Person-Trip Origin-Destination Matrix (Computed at Origin)

Origin (From)	Destination (To)					
	Office	Retail	Restaurant	Cinema/Entertainment	Residential	Hotel
Office		1	0	0	0	0
Retail	0		4	1	4	1
Restaurant	1	20		4	9	3
Cinema/Entertainment	0	0	0		0	0
Residential	0	0	0	0		0
Hotel	0	0	0	0	0	

Table 8-P (D): Internal Person-Trip Origin-Destination Matrix (Computed at Destination)

Origin (From)	Destination (To)					
	Office	Retail	Restaurant	Cinema/Entertainment	Residential	Hotel
Office		1	1	0	0	0
Retail	0		19	0	0	0
Restaurant	0	6		0	0	0
Cinema/Entertainment	0	0	2		0	0
Residential	1	1	9	0		0
Hotel	0	0	3	0	0	

Table 9-P (D): Internal and External Trips Summary (Entering Trips)

Destination Land Use	Person-Trip Estimates			External Trips by Mode*		
	Internal	External	Total	Vehicles[1]	Transit[2]	Non-Motorized[2]
Office	0	1	1	1	0	0
Retail	7	4	11	4	0	0
Restaurant	4	62	66	62	0	0
Cinema/Entertainment	0	0	0	0	0	0
Residential	0	0	0	0	0	0
Hotel	0	0	0	0	0	0
All Other Land Uses[3]	0	0	0	0	0	0

Table 9-P (O): Internal and External Trips Summary (Exiting Trips)

Origin Land Use	Person-Trip Estimates			External Trips by Mode*		
	Internal	External	Total	Vehicles[1]	Transit[2]	Non-Motorized[2]
Office	1	4	5	4	0	0
Retail	4	10	14	10	0	0
Restaurant	6	43	49	43	0	0
Cinema/Entertainment	0	0	0	0	0	0
Residential	0	0	0	0	0	0
Hotel	0	0	0	0	0	0
All Other Land Uses[3]	0	0	0	0	0	0

[1]Vehicle-trips computed using the mode split and vehicle occupancy values provided in Table 2-P

[2]Person-Trips

[3]Total estimate for all other land uses at mixed-use development site is not subject to internal trip capture computations in this estimator

*Indicates computation that has been rounded to the nearest whole number.

F. TRIP ADJUSTMENTS (Continued)

Peak Hour Trip Generation Adjustment Summary PM Peak Hour

Building Use	Total Trips	Shared [1] Trip Adjustment	Other Modes Adjustment	Total Adjusted Trips
Bar/Eatery	65	-3	-7	37
Quality Rest.	35	-3	-3	17
Light Industrial	1	0	-1	5
Retail	25	-11	-2	12
Coffee Shop	68	-4	-10	54
Fitness Center	9	0	-2	9
Brewery	23	0	-3	20
Office	0	-1	-1	4
TOTAL	**209**	**-22**	**-29**	**158**

NOTES:

(1) Total shared trip reduction value spread proportionally amongst each proposed restaurant use.

Peak Hour Trip Generation Adjustment Summary Saturday Peak Hour [1]

Building Use	Total Trips	Shared [2] Trip Adjustment	Other Modes Adjustment	Total Adjusted Trips
Bar/Eatery	65	-3	-9	53
Quality Rest.	35	-3	-5	27
Light Industrial	1	0	0	1
Retail	25	-11	-2	12
Coffee Shop	68	-4	-10	54
Fitness Center	9	0	-1	8
Brewery	61	0	-9	52
Office	0	0	0	0
TOTAL	**264**	**-21**	**-36**	**207**

NOTES:

(1) Saturday peak hour of the "82 Hanover Street" site expected to occur in the evening after 5:00PM

(2) Shared trip reduction values based upon PM peak hour estimates.

G. TRIP DISTRIBUTION

Vehicle trips generated during each of the noted peak time periods were assigned to/from the proposed site based upon directional trip distribution patterns presented in the Institute of Transportation Engineers 9th edition of the "**TRIP GENERATION**" handbook and locally obtained data. Those distribution patterns are listed, as follows, for each of the three peak hour time periods:

Land Use #110 – General Light Industrial

AM Peak Hour - Street	= 88% enter/12% exit
PM Peak Hour - Street	= 12% enter/88% exit
Saturday Peak Hour	= 47% enter/53% exit

Land Use #492 – Health/Fitness Club

AM Peak Hour - Street	= 50% enter/50% exit
PM Peak Hour - Street	= 57% enter/43% exit
Saturday Peak Hour	= 45% enter/55% exit

Land Use #715 – Single Tenant Office Building

AM Peak Hour - Street	= 89% enter/11% exit
PM Peak Hour - Street	= 15% enter/85% exit
Saturday Peak Hour	= n/a

Land Use #826 – Specialty Retail Center

AM Peak Hour - Street	= 56% enter/44% exit **[Estimated]**
PM Peak Hour - Street	= 44% enter/56% exit
Saturday Peak Hour	= 50% enter/50% exit **[Estimated]**

Land Use #925 – Drinking Place

AM Peak Hour - Street	= n/a
PM Peak Hour - Street	= 66% enter/34% exit
Saturday Peak Hour	= 68% enter/32% exit **[Based upon PM Peak Generator]**

Land Use #931 – Quality Restaurant

AM Peak Hour - Street	= n/a
PM Peak Hour - Street	= 67% enter/33% exit
Saturday Peak Hour	= 48% enter/52% exit

Local Traffic Data – Coffee Shop (Diamond Street Coffee Shop)

AM Peak Hour - Street	= 64% enter/36% exit
PM Peak Hour - Street	= 40% enter/60% exit
Saturday Peak Hour	= 64% enter/36% exit **[Estimated based upon weekday AM Peak Hour]**

Local Traffic Data – Brewery (Westfield Street Brewery)

AM Peak Hour - Street	= n/a
PM Peak Hour - Street	= 61% enter/39% exit
Saturday Peak Hour	= 62% enter/38% exit

Table 3, as follows, presents the directional distribution patterns of the peak hour traffic generated by the proposed "82 Hanover Street" project.

G. TRIP DISTRIBUTION (continued)

Table 3
Site Trip Distribution Patterns
"82 Hanover Street"

Proposed Use	AM Peak Hour-Street		PM Peak Hour-Street		Saturday Peak Hour	
	Entering Trips	Exiting Trips	Entering Trips	Exiting Trips	Entering Trips	Exiting Trips
Bar/Eatery	0	0	24	13	36	17
Quality Restaurant	3	0	11	6	13	14
Light Industrial	4	0	1	3	0	1
Retail	11	9	5	7	6	6
Coffee Shop	51	28	22	32	35	19
Fitness Center	2	2	5	4	4	4
Brewery	0	0	12	9	32	20
Office	4	0	1	3	0	0
TOTAL	**75**	**39**	**81**	**77**	**126**	**81**

SECTION 1

H. TRIP ASSIGNMENT

This section will be completed with the collection and summary of local traffic data requested by the City and the determination of site parking demand and supply requirements.

SECTION 2

TRAFFIC ACCIDENTS

The Maine Department of Transportation's (MDOT) Accident Records Section provided the latest three-year (2014 through 2016) crash data for the section of Hanover Street between Marginal Way and Portland Street and the segment of Parris Street between Kennebec and Portland Streets.

MaineDOT's safety audit is summarized as follows:

2014 -2016 Traffic Accident Summary

Location	Total Crashes	Critical Rate Factor
1. Hanover Street @ Marginal Way	6	1.34
2. Hanover Street @ Portland Street	1	0.43
3. Hanover Street btw. Marginal Way and Kennebec Street	3	0.81
4. Hanover Street btw. Kennebec Street and Lancaster Street	1	0.85
5. Hanover Street btw. Lancaster Street and Portland Street	4	2.54
6. Parris Street @ Portland Street	2	0.76
7. Parris Street btw. Lancaster Street and Portland Street	1	1.78

The MDOT considers any roadway intersection or segment a high crash location if both of the following criteria are met:

- ***8 or more accidents and,***
- ***A Critical Rate Factor greater than 1.00***

As the data presented in the chart shows, there are no high crash locations within the defined study area.

DEFAULT TITLE FROM MAP DOCUMENT

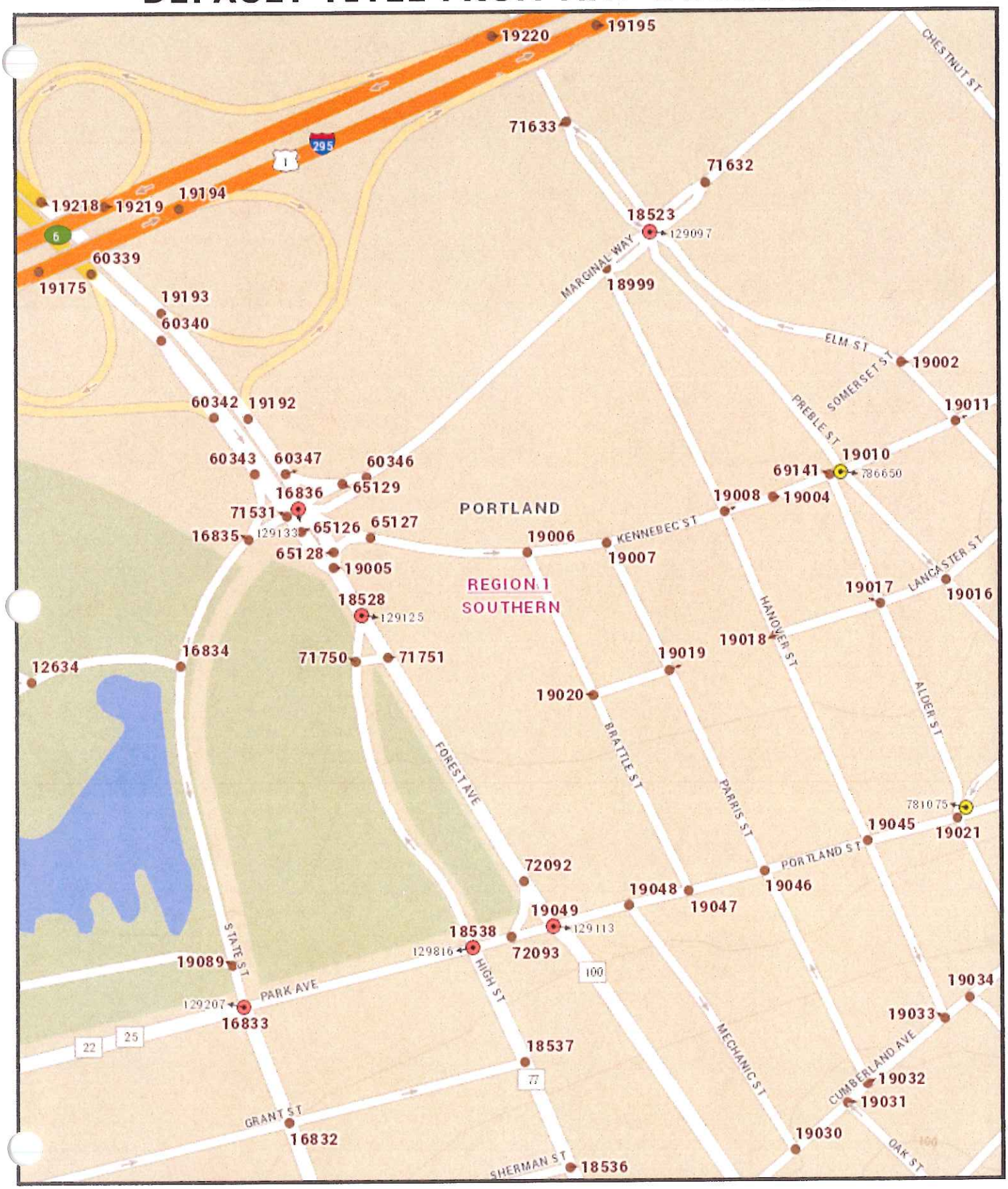

The Maine Department of Transportation provides this publication for information only. Reliance upon this information is at user risk. It is subject to revision and may be incomplete depending upon changing conditions. The Department assumes no liability if injuries or damages result from this information. This map is not intended to support emergency dispatch.

0.065 Miles

1 inch = 0.07 miles

Date: 3/29/2018
Time: 7:12:46 AM

Maine Department Of Transportation - Traffic Engineering, Crash Records Section

Crash Summary Report

Report Selections and Input Parameters

REPORT SELECTIONS

☑ **Crash Summary I** ☐ **Section Detail** ☑ **Crash Summary II** ☐ **1320 Public** ☐ **1320 Private** ☐ **1320 Summary**

REPORT DESCRIPTION

Hanover St in Portland

REPORT PARAMETERS

Year 2014, Start Month 1 through Year 2016 End Month: 12

Route: **0560345**	Start Node: **18999**	Start Offset: **0**	☐ **Exclude First Node**
	End Node: **19045**	End Offset: **0**	☐ **Exclude Last Node**

Maine Department Of Transportation - Traffic Engineering, Crash Records Section

Crash Summary I

Nodes

Node	Route - MP	Node Description	U/R	Total Crashes	Injury Crashes K	A	B	C	PD	Percent Injury	Annual M Ent-Veh	Crash Rate	Critical Rate	CRF
18999	0560345 - 0	Int of HANOVER ST MARGINAL WY	2	6	0	0	0	1	5	16.7	3.691	0.54 Statewide Crash Rate:	0.40 0.15	1.34
19008	0560345 - 0.11	0509428 POR,HANOVER,KENNEBEC ST.	2	0	0	0	0	0	0	0.0	1.151	0.00 Statewide Crash Rate:	0.51 0.14	0.00
19018	0560345 - 0.16	Int of HANOVER ST LANCASTER ST	2	0	0	0	0	0	0	0.0	0.413	0.00 Statewide Crash Rate:	0.60 0.14	0.00
19045	0560345 - 0.27	Int of HANOVER ST PORTLAND ST	2	1	0	0	0	0	1	0.0	1.676	0.20 Statewide Crash Rate:	0.47 0.14	0.00
Study Years: 3.00		NODE TOTALS:		7	0	0	0	1	6	14.3	6.931	0.34	0.34	1.00

Maine Department Of Transportation - Traffic Engineering, Crash Records Section

Crash Summary I

Sections

Start Node	End Node	Element	Offset Begin - End	Route - MP	Section Length	U/R	Total Crashes	K	Injury Crashes A	B	C	PD	Percent Injury	Annual HMVM	Crash Rate	Critical Rate	CRF
18999	19008	194689	0 - 0.11	0560345 - 0	0.11	2	3	0	0	0	1	2	33.3	0.00107	933.18	1155.07	0.00
Int of HANOVER ST MARGINAL WY				RD INV 05 60345											Statewide Crash Rate: 400.91		
19008	19018	194702	0 - 0.05	0560345 - 0.11	0.05	2	1	0	0	0	0	0	0.0	0.00024	1377.44	1626.47	0.00
0509428 POR,HANOVER,KENNEBEC ST.				RD INV 05 60345											Statewide Crash Rate: 400.91		
19018	19045	194720	0 - 0.11	0560345 - 0.16	0.11	2	4	0	0	0	0	4	0.0	0.00035	3861.49	1520.79	2.54
Int of HANOVER ST LANCASTER ST				RD INV 05 60345											Statewide Crash Rate: 400.91		
Study Years: 3.00				**Section Totals:**	0.27		8	0	0	0	1	6	12.5	0.00166	1607.50	1031.59	1.56
				Grand Totals:	0.27		15	0	0	0	2	12	13.3	0.00166	3014.07	1211.51	2.49

Maine Department Of Transportation - Traffic Engineering, Crash Records Section

Crash Summary Report

Report Selections and Input Parameters

REPORT SELECTIONS

☑ **Crash Summary I** ☐ **Section Detail** ☑ **Crash Summary II** ☐ **1320 Public** ☐ **1320 Private** ☐ **1320 Summary**

REPORT DESCRIPTION

Parris St in Portland

REPORT PARAMETERS

Year 2014, Start Month 1 through Year 2016 End Month: 12

Route: **0560565**	Start Node: **19007**	Start Offset: **0**	☐ **Exclude First Node**
	End Node: **19046**	End Offset: **0**	☐ **Exclude Last Node**

Maine Department Of Transportation - Traffic Engineering, Crash Records Section

Crash Summary I

Nodes															
Node	Route - MP	Node Description	U/R	Total Crashes	Injury Crashes K	A	B	C	PD	Percent Injury	Annual M Ent-Veh	Crash Rate	Critical Rate	CRF
19007	0560565 - 0	0509427 POR,KENNEBEC,PARRIS ST.	2	0	0	0	0	0	0	0.0	0.455	0.00 Statewide Crash Rate:	0.60 0.14	0.00
19019	0560565 - 0.06	Int of LANCASTER ST PARRIS ST	2	0	0	0	0	0	0	0.0	0.225	0.00 Statewide Crash Rate:	0.57 0.14	0.00
19046	0560565 - 0.16	Int of PARRIS ST PORTLAND ST	2	2	0	0	0	1	1	50.0	1.943	0.34 Statewide Crash Rate:	0.45 0.14	0.00
Study Years: 3.00			NODE TOTALS:	2	0	0	0	1	1	50.0	2.623	0.25	0.42	0.61

Maine Department Of Transportation - Traffic Engineering, Crash Records Section

Crash Summary I

Sections

Start Node	End Node	Element	Offset Begin - End	Route - MP	Section Length	U/R	Total Crashes	Injury Crashes K	A	B	C	PD	Percent Injury	Annual HMVM	Crash Rate	Critical Rate	CRF
19007	19019	194701	0 - 0.06	0560565 - 0	0.06	2	0	0	0	0	0	0	0.0	0.00012	0.00	1729.35	0.00
0509427 POR,KENNEBEC,PARRIS ST.				RD INV 05 60565											Statewide Crash Rate: 400.91		
19019	19046	194722	0 - 0.10	0560565 - 0.06	0.10	2	2	0	0	0	0	2	0.0	0.00023	2922.37	1641.93	1.78
Int of LANCASTER ST		PARRIS ST		RD INV 05 60565											Statewide Crash Rate: 400.91		
Study Years:	3.00			**Section Totals:**	0.16		2	0	0	0	0	2	0.0	0.00034	1933.20	1521.24	1.27
				Grand Totals:	0.16		4	0	0	0	1	3	25.0	0.00034	3866.39	1800.51	2.15

SECTION 3

A. ENTRANCE/EXIT LOCATION

Site improvement plan C-10 is a scaled drawing at 1-inch equals 20-feet, which provides the required detail of this section of the Traffic Movement Application.

SECTION 3

B. ENTRANCE AND EXIT PLAN VIEW

A plan view (Drawing C-10) of the proposed site denotes the names of intersecting roadways, and the driveways located across from the development site.

The proposed driveway improvements serving the proposed off-street parking lot meet and exceed the City's driveway "No-Parking" zone requirement [Chapter 28-53(b)] of 5-feet. Sightlines "*left*" from the existing driveway entrance meet the City's driveway entrance standard.

SECTION 3

C. ENTRANCE/EXIT DESIGN

All site improvements including the proposed off-street parking lot located along the Kennebec Street frontage, public sidewalk and curbing upgrades around the perimeter of the building and improvements within the discontinued section of Lancaster Street will be constructed in accordance to direction received from the City of Portland.

SECTION 4

TITLE, RIGHT OR INTEREST

The following Purchase and Sales Agreement provides evidence of the Applicant's rights in the proposed "82 Hanover Street" site.

Parcel 4

PURCHASE AND SALE AGREEMENT

THIS PURCHASE AND SALE AGREEMENT IS made this 24th day of October, 2017 by and between the City OF PORTLAND, a body politic and corporate located in Cumberland County, Maine, (hereinafter referred to as "Seller" or "City"), and Tom Watson & Co., LLC, or assigns, a Maine limited liability company having a mailing address of 104 Grant Street, Portland, ME 04101 (hereinafter referred to as "Buyer").

RECITALS

WHEREAS, the CITY is the owner of approximately 1.25 acres of land at or near 82 Hanover Street, Portland, Maine as generally depicted as Parcel 4 on the plan attached hereto as Exhibit A together with all buildings and other improvements located thereon (the "Premises") and incorporated herein; and

WHEREAS, Buyer desires to purchase the Premises, and the City desires to convey the Premises to Buyer;

NOW THEREFORE, in consideration of the foregoing and for other good and valuable consideration, the receipt and sufficiency of which is hereby acknowledged, the parties, intending to be legally bound, hereby agree as follows:

1. **SALE AND EFFECTIVE DATE.** City agrees to sell the Premises to Buyer, and Buyer agrees to purchase the Premises in accordance with the terms and conditions set forth in this Agreement. This Agreement is for the sale of land and buildings located at or about 82 Hanover Street. This Agreement shall become effective following the occurrence of both of the following: approval of this Agreement by the City Council of the City in substantially this form, and the City Manager's execution of this Agreement. The first calendar day after which both such events have occurred is hereinafter referred to as the "Effective Date". All deadlines and time periods set forth in this Agreement, including, without limitation, the Due Diligence Period, Financing Period and Closing Date shall be computed from the Effective Date.

2. **CONSIDERATION**. The purchase price for the Premises shall be Two Million Three Hundred Fifty Thousand ($2,350,000) (the "Purchase Price"), subject to the following cost adjustments and conditions:

    a. Buyer shall deposit the sum of Twenty-Five Thousand Dollars ($25,000.00) (the "Deposit") within 3 business days after the Effective Date of this Agreement that the parties agree will be held in escrow in a non-interest bearing account with CBRE | The Boulos Company; the Deposit shall be fully refundable until the later of the expiration of the Due Diligence Period or the Financing Period, as both are described herein; after the expiration of both such Periods, the Deposit shall be non-refundable except as expressly set forth herein, including, without limitation in paragraphs 3 and 10; and

d. Title, Survey and Environmental Objections. In addition to the Survey described above, the City agrees it has caused a Phase II Environmental study of the Premises to be performed. Buyer will have until the end of the Due Diligence Period to deliver to City any written objections to title, environmental, or survey matters that Buyer determines materially affect insurability of title at standard rates, or the use of the Premises, the value of the Premises, the cost of development of or cost or feasibility of construction on the Premises. Objections not made prior to the end of the Due Diligence Period will be deemed waived; provided, however, that objections pertaining to matters of record first appearing after the end of the Due Diligence Period may be made at any time prior to the closing. If the Survey and any environmental study (including, without limitation any Phase II Environmental study) are not completed and distributed to the parties at least thirty (30) days prior to the expiration of the Due Diligence Period, the Due Diligence Period will be extended to a date thirty (30) days after the date upon which the later of the Survey or any environmental study to be completed and received are completed and are received by Buyer and City.

e. Option to Cure. In the event of a title, Survey or environmental objection by Buyer, City will have the option, but not the obligation, to cure the objection and will notify Buyer of its election within ten (10) business days after receipt of the objection. In the event that the City elects to cure the objection, it will have sixty (60) days from the date of the notice of election, or such other reasonable time as the parties may agree, to cure the objection. In the event that the City does not elect to cure the objection, or, having elected to cure the objection fails to timely do so to Buyer's reasonable satisfaction, Buyer will have the option to (1) terminate this Agreement and obtain a refund of the Deposit (after which neither party will have any further obligation or liability to the other under this Agreement), (2) waive the objection and close, or (3) undertake the cure of such objection at its own expense (in which case it shall have 60 days to do so).

f. Deed. City shall convey the Premises to Buyer at the closing in fee simple by a municipal quitclaim deed without covenant. Title shall be good and insurable title at standard rates, free and clear of all encroachments, liens and encumbrances except (i) easements consented to by Buyer; (ii) easements for utilities servicing the property, (iii) City ordinances, and (iv) real estate taxes not yet due and payable. Buyer further acknowledges that the deed shall contain a restriction stating that in the event that the Premises or any portion thereof shall be exempt from real and personal property taxes, by transfer, conversion, or otherwise, then the then-owner of the exempt portion shall make annual payments to the City in lieu of taxes in the amount of the lesser of (a) the amount of property taxes that would have been assessed on the exempt portion of the real and personal property situated on the Premises had such property remained taxable, or (b) such other target percentage as may be approved as part of a city-wide PILOT policy that may be in effect at the time taxes are due on such property. Such restriction shall also confirm that Buyer and its successors and assigns shall possess and be vested with all rights and privileges as to abatement

take any other action with respect to any pre-existing environmental contamination disturbed thereby.

f. The parties hereto acknowledge and agree that it is a condition to Buyer's obligations under this Agreement that the results of the Inspections be acceptable to Buyer in its sole discretion. If the results of such due diligence are not acceptable to Buyer in its sole discretion Buyer may terminate this Agreement. If Buyer exercises its right to terminate this Agreement, then the City shall refund to Buyer the Deposit, if previously paid, without interest, within ten (10) days after receipt of Buyer's termination notice, and neither party shall have any further obligations or liabilities under this Agreement except as expressly set forth in this Agreement. Any termination notice sent by Buyer with respect to this Agreement may merely state that Buyer elects to terminate this Agreement, shall have no formal requirements, and shall be immediately effective.

5. **REAL ESTATE TAXES, PRORATIONS AND TRANSFER TAX.** Buyer shall be liable for all real estate taxes beginning as of the start of fiscal year following the closing and continuing thereafter. Because the Premises is currently owned by the City of Portland, which is exempt from real estate taxes, no taxes were assessed or will be due for any portion of the current fiscal year, and no taxes will be prorated at the closing. Any utilities for the Property shall be prorated as of the closing. The Buyer's one half share of Maine real estate transfer tax shall be paid for by Buyer in accordance with 36 M.R.S.A. § 4641-A. City is exempt from paying the transfer tax pursuant to 36 M.R.S.A. § 4641-C. The recording fee for the deed of conveyance and any expenses relating to Buyer's financing or closing shall be paid for by Buyer.

6. **DEFAULT AND REMEDIES**. In the event that Buyer defaults hereunder for a reason other than the default of the City, City shall retain the deposit as its sole remedy. In the event City defaults under this Agreement, and if Buyer is not then in default hereunder, Buyer shall have the right to pursue specific performance and the City agrees it shall not invoke any sovereign immunity defense nor any defense based upon its status as a City, municipality, body politic or the like, but Buyer at all times may elect in substitution therefor, as its sole remedy, the right to a return of its deposit.

7. **RISK OF LOSS.** The risk of loss or damage to the Premises by fire, eminent domain, condemnation, or otherwise, until transfer of title hereunder, is assumed by the City. The Premises is to be delivered in substantially the same condition as of the date of this Agreement unless otherwise stated. In the event City is not able to deliver the Premises as stated, Buyer may terminate this Agreement and receive a refund of the Deposit without interest, and neither party shall have any further obligations or liabilities under this Agreement except as expressly set forth in this Agreement, or Buyer may elect to close hereunder and receive an assignment of any applicable insurance proceeds payable to the City relating to such loss or damage.

8. **PROPERTY SOLD "AS IS, WHERE IS**." Buyer acknowledges that Buyer will have an opportunity to inspect the Premises, and to hire professionals to do so, and that Premises will be sold "as is, where is" and "with all faults." City, and its agents, make

extension as provided above. In the event Buyer shall elect to so extend the Closing Date, the City agrees to pursue the removal of the Deed Restrictions and Subdivision Approval.

If Buyer shall elect to terminate this Agreement then the City shall refund the Deposit, if previously paid, without interest, and this Agreement shall be terminated and neither party shall have any further obligations or liabilities under this Agreement, unless the parties mutually agree to extend this Agreement. Buyer acknowledges and agrees that the City is acting as Seller, and not in its regulatory capacity, in connection with this Agreement. The delivery to Buyer, and acceptance and recording by the Buyer of a deed to the Buyer of the Premises, will evidence conclusive and final consent by the Buyer to the waiver or completion of all these conditions.

11. <u>CLOSING</u>. Time is of the essence in the performance of this Agreement. The closing shall be held at the offices of Buyer's counsel at a time agreeable to the parties on or before the day that is the later of five months after the Effective Date of this Agreement or thirty (30) days after the later of (i) the expiration of the Due Diligence Period; (ii) the deadline for the City to resolve any title, Survey or environmental objections; or (iii) the date to which Buyer elects to extend the Closing Date under Paragraph 10 (the "Closing Date"). At the Closing:

a. City shall execute, acknowledge and deliver to Buyer a municipal quitclaim deed conveying to Buyer good, and insurable title (at standard rates) to the Premises, free and clear of all liens and encumbrances except as otherwise set forth herein.

b. Buyer shall deliver the balance of the Purchase Price to the City by wire transfer (or as otherwise reasonably requested by the City); and

c. Each party shall deliver to the other such other documents, certificates and the like as may be required herein or as may be necessary to carry out the obligations under this Agreement, and for the Buyer to obtain owners and lenders title insurance in form reasonably acceptable to Buyer and to Buyer's lender.

d. Buyer shall deliver evidence, reasonably satisfactory to City's Corporation Counsel, that the entity receiving title to the Premises is in good standing under Maine law, and that the individuals acting with respect to the Closing and executing documents on behalf of Buyer are authorized to do so.

12. <u>BUYER'S POST CLOSING OBLIGATIONS; ESCROW AGREEMENT</u>. Buyer agrees as follows:

a. Buyer agrees at Closing to deposit $115,000.00 to be held in escrow (the "Escrow Account") pursuant to an escrow agreement in form mutually acceptable to Buyer and City with a mutually acceptable escrow agent.

from escrow to the City's Housing Trust Fund, and until both Applications have been filed, an additional $10,000.00 shall be released from escrow to the City's Housing Trust Fund each ninety (90) days thereafter.

g. Additionally, Buyer shall commence construction of the Residential Project and the Commercial Project by the later of the date that is thirty-six (36) months after Closing under this Agreement or one hundred eighty (180) days after final approval of the Projects (including, without limitation, final decisions in all applicable municipal or judicial proceedings) and the expiration of all applicable appeal periods (the "Construction Start Date"). Buyer agrees to diligently pursue all approvals for both Projects. If Buyer fails to commence construction of the Residential Project and the Commercial Project by the later of the Construction Start Date, then $10,000.00 shall be released from escrow and to the City's Housing Trust Fund, and until construction on both Projects is commenced, an additional $10,000.00 shall be released from escrow to the City's Housing Trust Fund each ninety (90) days thereafter. Within thirty (30) days after the commencement of construction of both Projects, the remaining balance of the Escrow Account shall be released to Buyer. If no Closing takes place under this Agreement, the Buyer shall not be required to fund the Escrow Account nor make any payment. Notwithstanding anything to the contrary above, in the event that Buyer fails to commence construction of both Projects within 5 years from the Closing Date, the entire remaining balance of the Escrow Account shall be released to the City's Housing Trust Fund.

h. City hereby agrees that despite the references in this Agreement to Buyer as the developer with respect to the Residential Project and the Commercial Project, that the two projects will be undertaken by two different Limited Liability Companies ("LLCs") to be formed or corporations to be formed which will be assignees of Buyer, and the City hereby consents to the same and to Buyer's assignment of its rights and obligations under this Agreement to any such LLC's or corporations, provided that Thomas Watson will be a manager or co-manager of any such LLCs and President or Vice President of any such corporations.

i. The provisions of this section shall survive closing.

13. **ENTIRE AGREEMENT.** This Agreement represents the entire and complete Agreement and understanding between the parties and supersedes any prior agreement or understanding, written or oral, between the parties with respect to the acquisition or exchange of the Premises hereunder. This Agreement cannot be amended except by written instrument executed by City and Buyer.

14. **NON-WAIVER.** No waiver of any breach of any one or more of the conditions of this Agreement by either party shall be deemed to imply or constitute a waiver of any succeeding or other breach hereunder.

15. **HEADINGS AND CAPTIONS.** The headings and captions appearing herein are for

all of which together shall constitute one and the same agreement.

21. **BROKERS.** The City shall be responsible for paying all its brokers, including CBRE | The Boulos Company, at closing. Buyer has no broker other than Joseph Porta of Porta & Co., who Buyer understands is to be compensated by CBRE | The Boulos Company. Buyer agrees to indemnify and hold harmless City from any claims made by any broker should Buyer's representation in this paragraph be false. Subject to the limitations of liability set forth in the Maine Tort Claims Act, City agrees to indemnify and hold harmless Buyer from any claims made by any broker should City's representation in this paragraph be false. The foregoing indemnities shall include all legal fees and costs incurred in defense against any such claim, and shall survive closing.

22. **RECITALS INCORPORATED BY REFERENCE.** The recitals set forth above are incorporated herein by reference and made a part of this Agreement.

IN WITNESS WHEREOF, the parties have hereunto have caused this instrument to be executed on their behalf by their duly authorized officers or representatives, as of the day and year first written above.

CITY OF PORTLAND

Sonia Bean
WITNESS

Jon P. Jennings
Its City Manager

TOM WATSON & CO., LLC

WITNESS

Printed Name: Thomas E. Watson
Its Manager

Approved as to Form:

Corporation Counsel's Office

SECTION 5

PUBLIC OR PRIVATE RIGHTS-OF-WAY

The former location of Lancaster Street is subject to the following easement, "*The right to enter into this section of Lancaster Street for the purpose of maintenance repair or replacement of the existing sewer is hereby reserved unto the City of Portland until such time said sewer is abandoned or discontinued*".

The property subdivision plat states, "*the formal discontinuance of this portion of Lancaster Street on June 15, 1981 leaves a public easement unless specific language states otherwise. A title opinion by a qualified attorney is suggested in order to confirm the public rights in the discontinued street*".

SECTION 6

SCHEDULE

Tom Watson & Co., LLC anticipates full occupancy of "*82 Hanover Street*" building in 2019.

Parcel Map

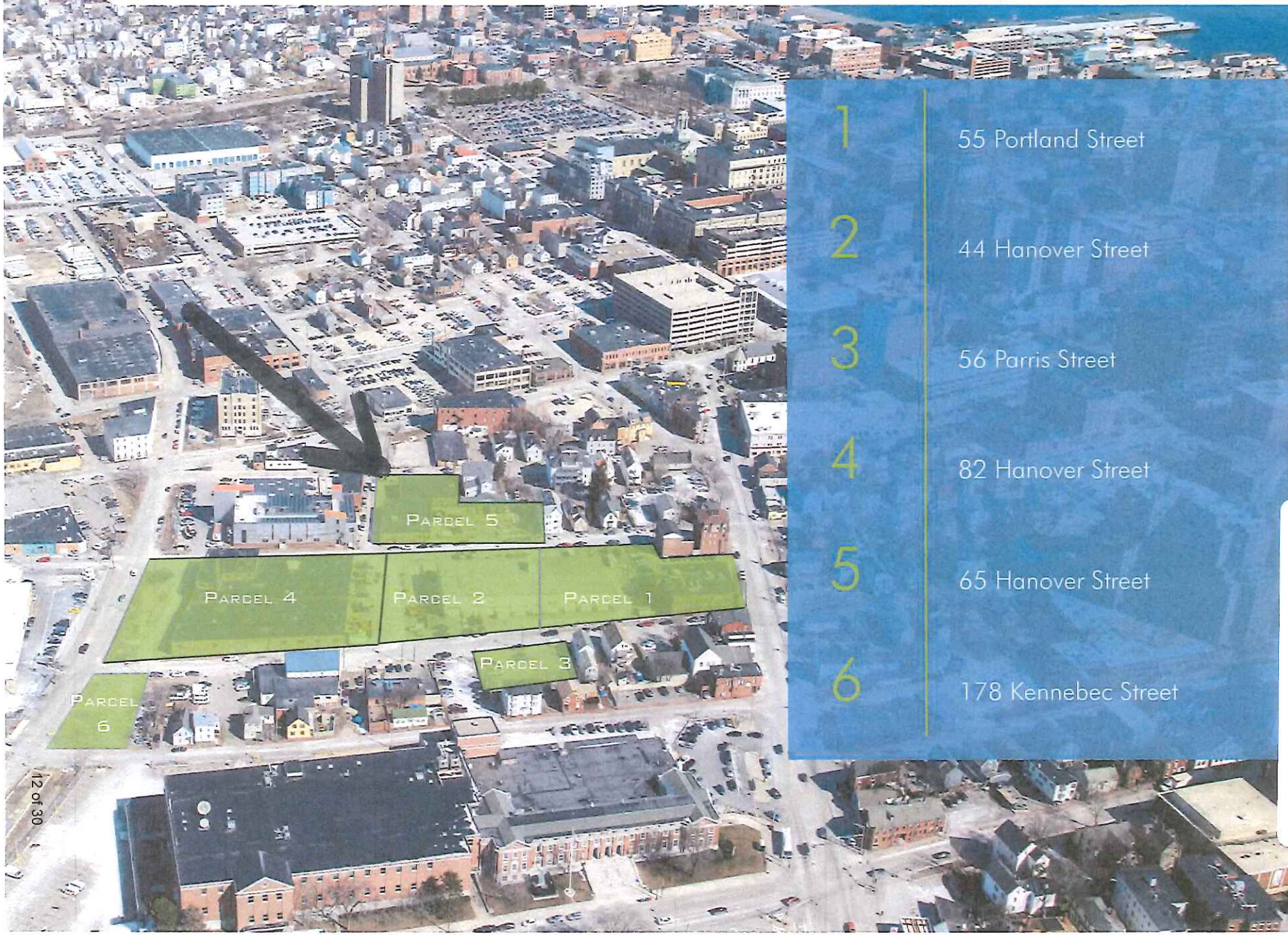

1	55 Portland Street
2	44 Hanover Street
3	56 Parris Street
4	82 Hanover Street
5	65 Hanover Street
6	178 Kennebec Street

EXHIBIT A

EXHIBIT B

BAYSIDE RFP
TOM WATSON & COMPANY
PROPOSAL FOR THE DEVELOPMENT OF A 23 UNIT APARTMENT BUILDING AT 104 GRANT STREET, PORTLAND MAINE

104 Grant St- Current Use

PORTLAND, MAINE

BAYSIDE RFP - 104 GRANT STREET

PORTLAND, MAINE

JUNE 01, 2017

1 VIEW LOOKING WEST ON GRANT STREET
N.T.S.

Port Property
MANAGEMENT

PROGRESS PRINT ONLY
Not for Construction

RYAN SENATORE **ARCHITECTURE**

BAYSIDE RFP - 104 GRANT STREET
PORTLAND, MAINE

JUNE 01, 2017

1 104 GRANT STREET - SOUTH ELEVATION
N.T.S.

PROGRESS PRINT ONLY
Not for Construction

Port Property
MANAGEMENT

RYAN SENATORE **ARCHITECTURE**

BAYSIDE RFP - 104 GRANT STREET

PORTLAND, MAINE

1st Floor

JUNE 01, 2017

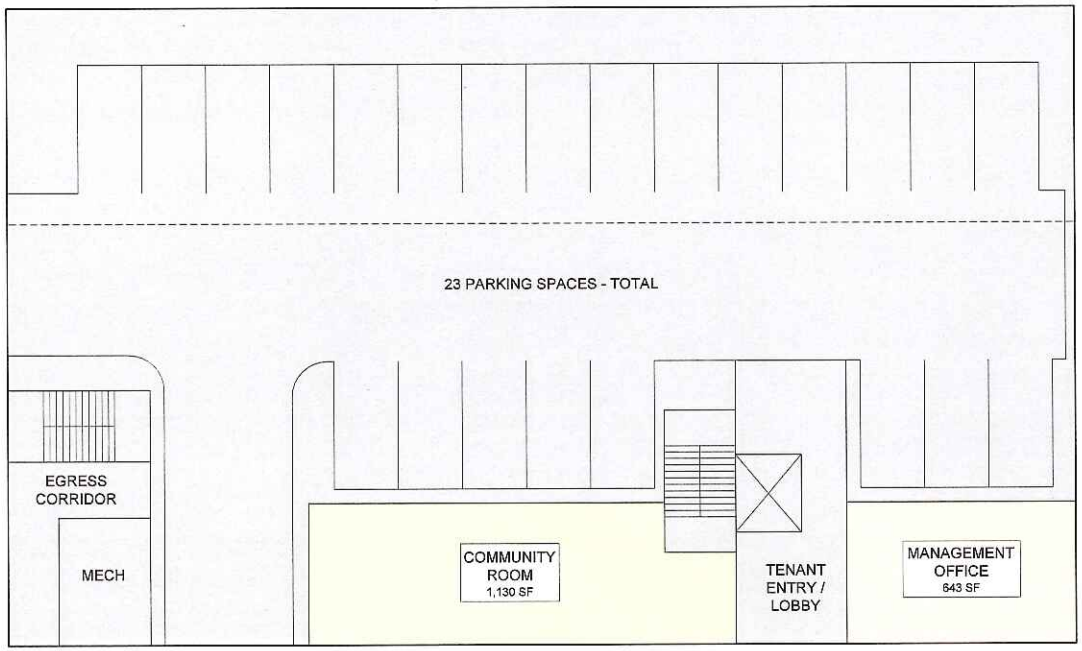

104 GRANT STREET		
BUILDING AREA		
FIRST FLOOR AREA	(13,550 SF)	
COMMUNITY ROOM		1,130 SF
MANAGEMENT OFFICE		643 SF
SECOND FLOOR AREA	(8,775 SF)	
UNIT - 1		1,228 SF
UNIT - 2		1,030 SF
UNIT - 3		815 SF
UNIT - 4		711 SF
UNIT - 5		958 SF
UNIT - 6		934 SF
UNIT - 7		980 SF
UNIT - 8		1,024 SF
SECOND FLOOR AREA	(8,775 SF)	
UNIT - 9		1,228 SF
UNIT - 10		1,033 SF
UNIT - 11		815 SF
UNIT - 12		711 SF
UNIT - 13		958 SF
UNIT - 14		934 SF
UNIT - 15		980 SF
UNIT - 16		1,024 SF
FOURTH FLOOR AREA	(8,775 SF)	
UNIT - 17		1,228 SF
UNIT - 18		1,030 SF
UNIT - 19		815 SF
UNIT - 20		1,645 SF
UNIT - 21		958 SF
UNIT - 22		1,024 SF
UNIT - 23		980 SF
	BUILDING TOTAL =	40,320 SF

NOTE:
ALL SQUARE FOOTAGES CALCULATED USING OUTSIDE FACE OF EXTERIOR WALLS AND CENTERLINE OF SHARED WALLS

0 4' 8' 16' 32'

1 104 GRANT STREET - FIRST FLOOR PLAN
1/8" = 1'-0"

PROGRESS PRINT ONLY
Not for Construction

Port Property MANAGEMENT

RYAN SENATORE **ARCHITECTURE**

BAYSIDE RFP - 104 GRANT STREET

PORTLAND, MAINE

2nd Floor

JUNE 01, 2017

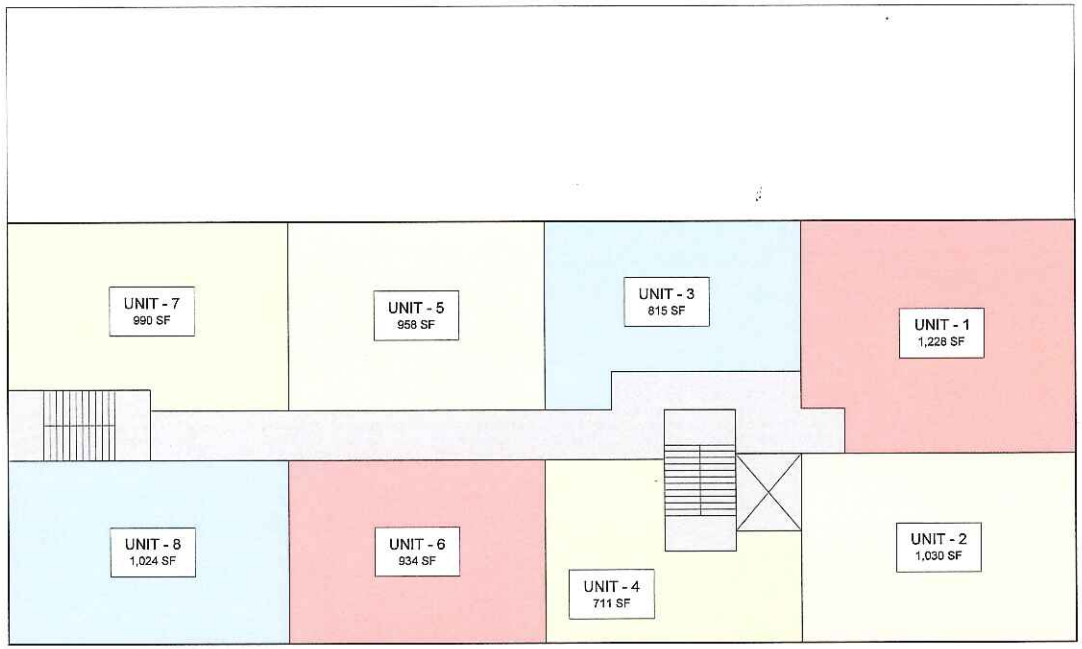

104 GRANT STREET		
BUILDING AREA		
FIRST FLOOR AREA	(13,500 SF)	
COMMUNITY ROOM		1,130 SF
MANAGEMENT OFFICE		643 SF
SECOND FLOOR AREA	(8,775 SF)	
UNIT - 1		1,228 SF
UNIT - 2		1,030 SF
UNIT - 3		815 SF
UNIT - 4		711 SF
UNIT - 5		958 SF
UNIT - 6		934 SF
UNIT - 7		990 SF
UNIT - 8		1,024 SF
SECOND FLOOR AREA	(8,775 SF)	
UNIT - 9		1,228 SF
UNIT - 10		1,030 SF
UNIT - 11		815 SF
UNIT - 12		711 SF
UNIT - 13		958 SF
UNIT - 14		934 SF
UNIT - 15		990 SF
UNIT - 16		1,024 SF
FOURTH FLOOR AREA	(8,775 SF)	
UNIT - 17		1,228 SF
UNIT - 18		1,030 SF
UNIT - 19		815 SF
UNIT - 20		1,045 SF
UNIT - 21		958 SF
UNIT - 22		1,024 SF
UNIT - 23		990 SF
	BUILDING TOTAL =	40,320 SF

NOTE:
ALL SQUARE FOOTAGES CALCULATED USING OUTSIDE FACE OF EXTERIOR WALLS AND CENTERLINE OF SHARED WALLS

0 4' 8' 16' 32'

1 104 GRANT STREET - SECOND FLOOR PLAN
1/8" = 1'-0"

PROGRESS PRINT ONLY
Not for Construction

Port Property
MANAGEMENT

RYAN SENATORE **ARCHITECTURE**

BAYSIDE RFP - 104 GRANT STREET

PORTLAND, MAINE

3rd Floor

JUNE 01, 2017

104 GRANT STREET		
BUILDING AREA		
FIRST FLOOR AREA	(13,503 SF)	
COMMUNITY ROOM		1,130 SF
MANAGEMENT OFFICE		643 SF
SECOND FLOOR AREA	(8,775 SF)	
UNIT - 1		1,228 SF
UNIT - 2		1,030 SF
UNIT - 3		815 SF
UNIT - 4		711 SF
UNIT - 5		958 SF
UNIT - 6		934 SF
UNIT - 7		990 SF
UNIT - 8		1,024 SF
SECOND FLOOR AREA	(8,775 SF)	
UNIT - 9		1,228 SF
UNIT - 10		1,030 SF
UNIT - 11		815 SF
UNIT - 12		711 SF
UNIT - 13		958 SF
UNIT - 14		934 SF
UNIT - 15		990 SF
UNIT - 16		1,024 SF
FOURTH FLOOR AREA	(8,775 SF)	
UNIT - 17		1,228 SF
UNIT - 18		1,030 SF
UNIT - 19		815 SF
UNIT - 20		1,645 SF
UNIT - 21		958 SF
UNIT - 22		1,024 SF
UNIT - 23		990 SF
	BUILDING TOTAL =	40,320 SF

NOTE:
ALL SQUARE FOOTAGES CALCULATED USING OUTSIDE FACE OF EXTERIOR WALLS AND CENTERLINE OF SHARED WALLS

0 4' 8' 16' 32'

1 104 GRANT STREET - THIRD FLOOR PLAN
1/8" = 1'-0"

PROGRESS PRINT ONLY
Not for Construction

Port Property
MANAGEMENT

RYAN SENATORE **ARCHITECTURE**

BAYSIDE RFP - 104 GRANT STREET

PORTLAND, MAINE

4th Floor

JUNE 01, 2017

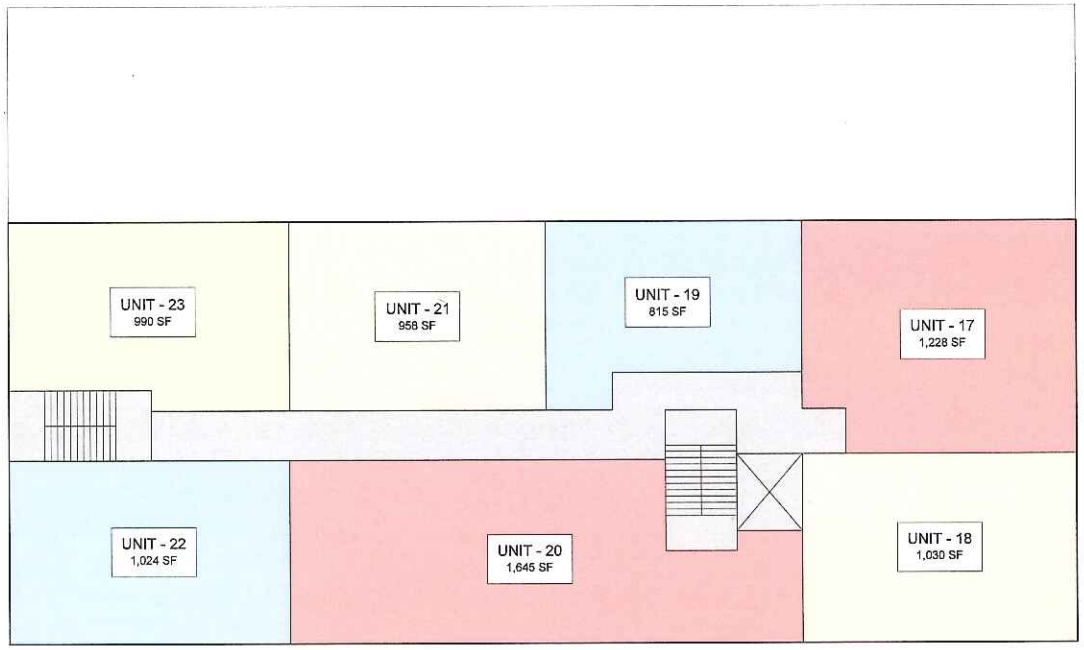

104 GRANT STREET		
BUILDING AREA		
FIRST FLOOR AREA	(13,500 SF)	
COMMUNITY ROOM		1,130 SF
MANAGEMENT OFFICE		643 SF
SECOND FLOOR AREA	(8,775 SF)	
UNIT - 1		1,228 SF
UNIT - 2		1,030 SF
UNIT - 3		815 SF
UNIT - 4		711 SF
UNIT - 5		958 SF
UNIT - 6		934 SF
UNIT - 7		990 SF
UNIT - 8		1,024 SF
SECOND FLOOR AREA	(8,775 SF)	
UNIT - 9		1,228 SF
UNIT - 10		1,030 SF
UNIT - 11		815 SF
UNIT - 12		711 SF
UNIT - 13		958 SF
UNIT - 14		934 SF
UNIT - 15		990 SF
UNIT - 16		1,024 SF
FOURTH FLOOR AREA	(8,775 SF)	
UNIT - 17		1,228 SF
UNIT - 18		1,030 SF
UNIT - 19		815 SF
UNIT - 20		1,645 SF
UNIT - 21		958 SF
UNIT - 22		1,024 SF
UNIT - 23		990 SF
	BUILDING TOTAL =	40,320 SF

NOTE:
ALL SQUARE FOOTAGES CALCULATED USING OUTSIDE FACE OF EXTERIOR WALLS AND CENTERLINE OF SHARED WALLS

0 4' 8' 16' 32'

1 104 GRANT STREET - FOURTH FLOOR PLAN
1/8" = 1'-0"

PROGRESS PRINT ONLY
Not for Construction

Port Property MANAGEMENT

RYAN SENATORE **ARCHITECTURE**

EXHIBIT C

CITY OF PORTLAND BAYSIDE PROPERTIES
TOM WATSON LETTER OF INTENT TO PURCHASE

TABLE OF CONTENTS

1. LETTERS OF INTENT TO PURCHASE (IN SEPERATE PACKET):
    a. 82 HANOVER STREET
    b. 44 HANOVER STREET
    c. 56 PARRIS STREET

2. DESCRIPTION OF INTENDED USES

3. TOM WATSON BIO

4. 82 HANOVER
    a. STREET SCAPE-1
    b. STREET SCAPE-2
    c. ARCHITECT RENDERING
    d. INTENDED FLOOR PLAN LAYOUT- FIRST FLOOR
    e. INTENDED FLOOR PLAN LAYOUT (WITH ROOF TOP DECKS)- SECOND FLOOR

5. LANCASTER COURT- ARCHITECT RENDERING

6. 44 HANOVER
    a. ARCHITECT RENDERING
    b. INTENDED FLOOR PLAN LAYOUT

7. 56 PARRIS STREET
    a. ARCHITECT RENDERING OF PROPOSED 23 UNIT APARTMENT BUILDING
    b. INTENDED FLOOR PLAN LAYOUT (1 THRU 4)

8. 104 GRANT STREET
    a. PICTURE OF CURRENT USE
    b. ARCHITECT RENDERING OF 23 UNIT APARTMENT BUILDING
    c. FLOOR LAYOUTS (FLOORS 1 THRU 4)

9. 117 LOFTS: THE SCHLOTTERBECK & FOSS BUILDING (NOW A 56 UNIT APARTMENT BLDG)
    a. EXTERIOR PICTURES
    b. PICTURES OF APARTMENTS AS THEY ARE TODAY

DESCRIPTION O NTENDED USE

82 Hanover

- Relocate Port Property Management headquarters to 82 Hanover from 104 Grant Street in Parkside
- Bring in retailers/partners who will contribute to the community as well as the economy
- Open spaces/commons available for public use
- Leverage large rooftop for decks and greenspace to add comfortable density to neighborhood
- Creates opportunity for construction of 23 units on Grant Street and eliminates an office/warehouse that sits in the middle of the Parkside residential neighborhood

44 Hanover

- 16 separate spaces all with autonomous access to the street.
- One Central Space of over 3,500SF for a public/communal user like pub, café, eatery
- Glass OHD to promote openness, and allow for artists and artisans to combine retail display space to their work space. Promote marketplace environment
- Affordable/accessible to the creative community at under $1,000/month.

Lancaster Court (between 82 Hanover & 44 Hanover)

- Commons/courtyard space open to public for public use
- Available for outdoor recreation including farmers market and small music venue for tenants and managers to promote work/events.
- Display and value public art and communal aesthetic enhancements
- Cobble stone street
- Trees/landscaping
- Fountain/water wall

56 Parris Street

- 23 2 BR 2 Bath units
- Unique product to Portland
- Create product for families (2 bathrooms) or multiple roommates (making it affordable)
- At 23 units, 4 stories high it is scaled to the other buildings in the neighborhood

Tom Watson & Company

Thomas Watson
(207) 252-0358

June 22, 2017

Thomas Watson founded Port Property Management in 1993 with his father Jack who later sold his half of the business to Russell Pierce (Tom's brother-in-law). Tom and Russ have had a successful partnership for the last 17 years and currently employ 41 full time employees, most of whom call Portland their home.

Port Property manages over 1,300 apartments and commercial spaces in Portland and South Portland, the bulk of which are on the Portland peninsula. All of the properties are owned by Port Property related companies.

Tom graduated with a B.A. from Stanford University in 1985 and received an MBA from Boston University in 1992.

He lives in Portland with his wife Judy and their 3 children, all of whom attend Portland Public Schools.

104 Grant St. Portland, Maine 04101
Phone: 207-761-0832 Fax: 207-761-8048

BAYSIDE RFP
TOM WATSON & COMPANY
PROPOSAL FOR THE DEVELOPMENT OF
82 HANOVER STREET, PORTLAND MAINE

82 Hanover Street- Streetscape, #1

PORTLAND, MAINE

BAYSIDE RPF-82 Hanover Street- Street Scape, #2

PORTLAND, MAINE

JUNE 16, 2017

1 VIEW LOOKING SOUTH EAST ON PARRIS STREET
N.T.S.

PROGRESS PRINT ONLY
Not for Construction

Port Property
MANAGEMENT

RYAN SENATORE **ARCHITECTURE**

BAYSIDE RFP - 82 HANOVER STREET-Rendering

PORTLAND, MAINE

MAY 11, 2017

1 VIEW LOOKING SOUTH ON HANOVER STREET
N.T.S.

PROGRESS PRINT ONLY
Not for Construction

Port Property
MANAGEMENT

RYAN SENATORE **ARCHITECTURE**

BAYSIDE RFP - 82 HANOVER STREET-First Floor

PORTLAND, MAINE

JUNE 12, 2017

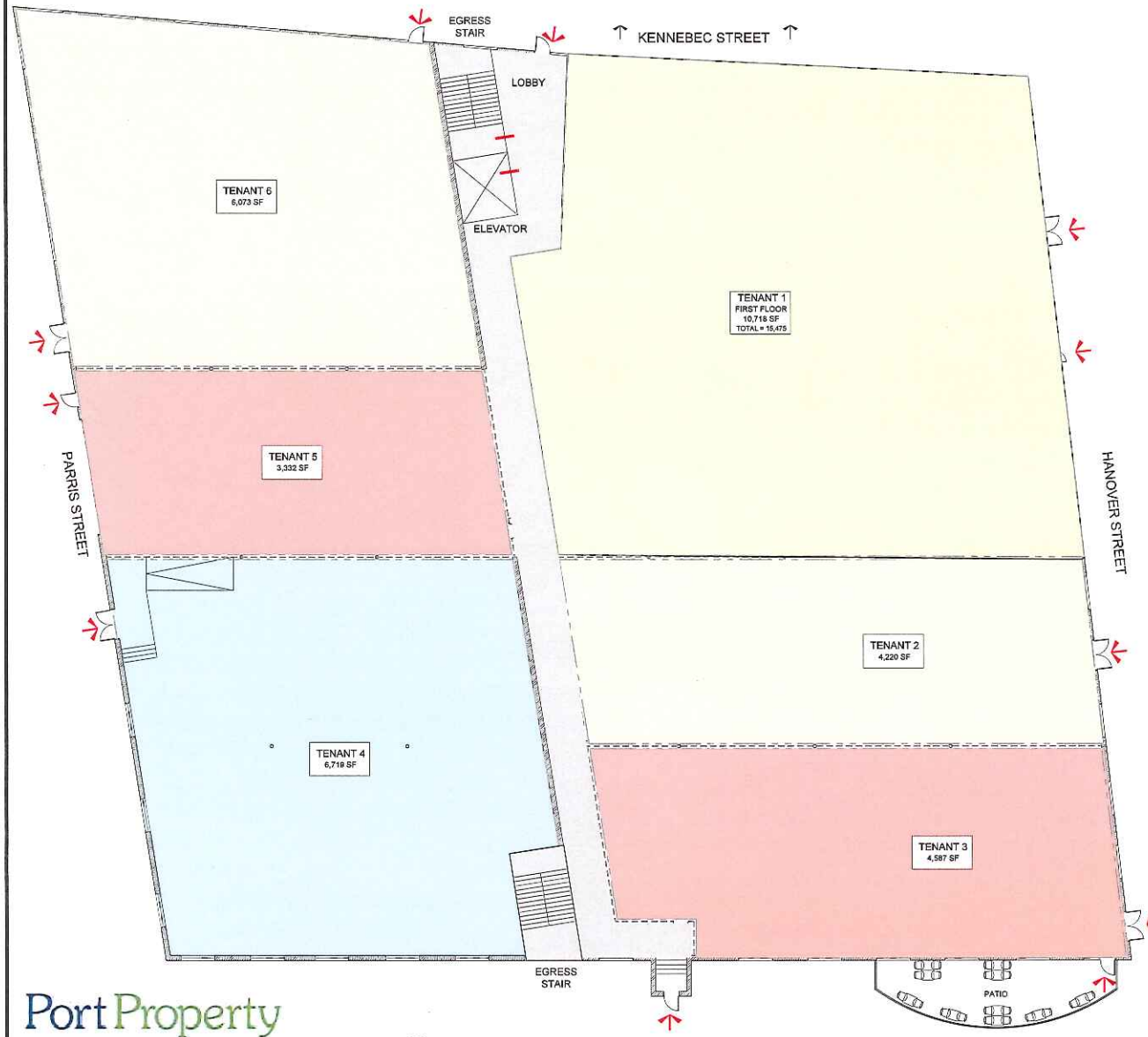

1 FIRST FLOOR CONCEPT PLAN
3/32" = 1'-0"

Port Property
MANAGEMENT

PROGRESS PRINT ONLY
Not for Construction

RYAN SENATORE **ARCHITECTURE**

BAYSIDE RFP - 82 HANOVER STREET- Second Floor

PORTLAND, MAINE

JUNE 12, 2017

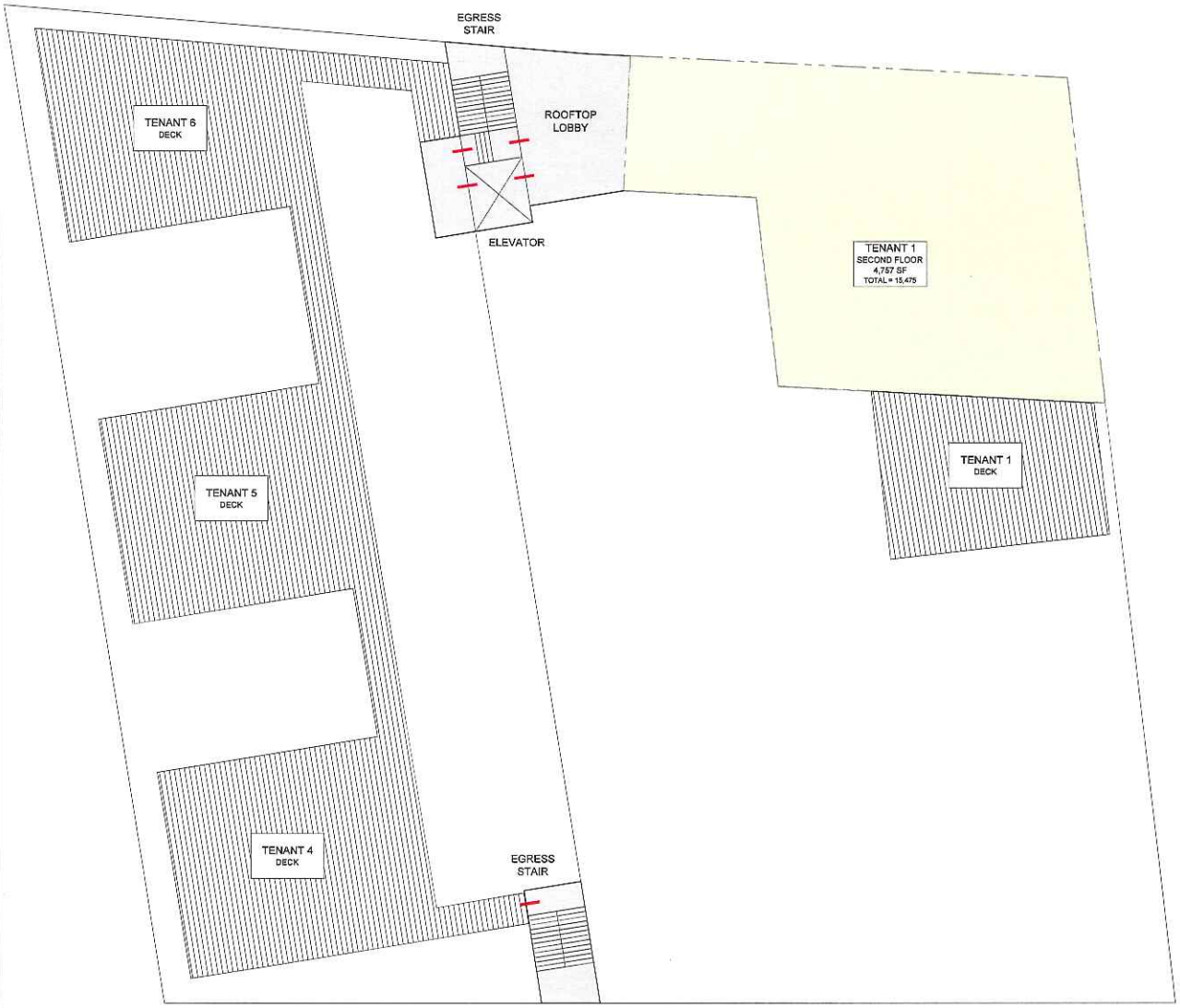

Port Property MANAGEMENT

1 SECOND FLOOR CONCEPT PLAN

PROGRESS PRINT ONLY
Not for Construction

RYAN SENATORE **ARCHITECTURE**

BAYSIDE RFP - LANCASTER COURT
PORTLAND, MAINE

JUNE 21, 2017

1 VIEW LOOKING NORTH ON PARRIS STREET
N.T.S.

Port Property
MANAGEMENT

PROGRESS PRINT ONLY
Not for Construction

RYAN SENATORE **ARCHITECTURE**

TRAFFIC ASSESSMENT

FOR

PROPOSED

"82 Hanover Street"

Multi-Tenant Development

Prepared For: Tom Watson & Co., LLC
Prepared By: William Bray, P.E.
May, 2016

INTRODUCTION

Tom Watson & Co., Inc. is proposing to re-develop the former Portland Public Works vehicle storage facility located at 82 Hanover Street into a multi-tenant commercial development project. The proposed project converts the former public works space into a number of tenant uses including: retail, light industrial space, a brewery, high scale restaurant, coffee shop, general office space and a fitness center. Full occupancy of the "82 Hanover Street" commercial project is expected to require 24 to 30 months (late 2020).

The current site design provides a 39-space parking lot located along the Kennebec Street frontage of the project site. The proposed parking lot is designed with a one-way circulation pattern, with motorists entering from Hanover Street and exiting onto Parris Street.

The "82 Hanover Street" site is directly accessed from Hanover Street, Parris Street and Kennebec Street, which provides direct connections to the major collector street system (i.e. Marginal Way, Preble/Elm Streets, Portland Street, etc.) serving the greater West Bayside neighborhood.

The purpose of this study is to examine existing traffic conditions in the general vicinity of the proposed project, estimate the total number of site trips generated by the proposed commercial retail project, and determine whether the existing transportation system can safely accommodate the added traffic demand generated by the project.

EXISTING TRAFFIC

Manual turning movement counts were conducted at the following intersections during the month of April 2018 to establish existing peak traffic volumes on the streets serving the project site:

1. *Hanover Street @ Portland Street*
2. *Hanover Street @ Kennebec Street*
3. *Hanover Street @ Marginal Way*
4. *Preble Street/Elm Street @ Marginal Way*

All vehicular traffic entering each intersection was recorded in 15-minute intervals between the hours of 7:00 and 9:00 AM and, again, between 3:00 and 6:00 PM. From a summary of the data, peak hour traffic projections were developed for both the "*morning*" and "*evening*" peak commuter hours. Generally, the AM peak hour occurs between 7:30 and 8:30 AM at each of the four study intersections, whereas, the PM peak hour times were different at each location. Copies of the peak hour traffic summary sheets are attached as an appendix to the report.

Traffic data collected during the month of April requires an adjustment to reflect "*peak*" travel conditions experienced during the summer months of July and August. MaineDOT provides factors for adjusting traffic data collected during other periods of time. MaineDOT utilizes highway classifications of I, II, or III for all State and Local roadways. Group I roadways are defined as urban roadways or those roads that typically see commuter traffic and experience little fluctuation from week to week throughout the year. Group II roadways or arterial roads are those that see a combination of commuter and recreational traffic and; therefore, experience moderate fluctuations during the year. Group III roads or recreational roadways are typically used for recreational purposes and experience significant seasonal fluctuations. MaineDOT has designated each of the streets included in the study as Group I roadways, which requires the collected traffic data to be adjusted by a factor of approximately 1.09. Figure 1 illustratively presents the estimated 2018 Design Hour Traffic volumes for the study intersections.

TRAFFIC SAFETY

The Maine Department of Transportation's (MDOT) Accident Records Section provided the latest three-year (2014 through 2016) crash data for the section of Hanover Street between Marginal Way and Portland Street and the segment of Parris Street between Kennebec and Portland Streets.

MaineDOT's safety audit is summarized as follows:

2014 -2016 Traffic Accident Summary

Location	Total Crashes	Critical Rate Factor
1. Hanover Street @ Marginal Way	6	1.34
2. Hanover Street @ Portland Street	1	0.43
3. Hanover Street btw. Marginal Way and Kennebec Street	3	0.81
4. Hanover Street btw. Kennebec Street and Lancaster Street	1	0.85
5. Hanover Street btw. Lancaster Street and Portland Street	4	2.54
6. Parris Street @ Portland Street	2	0.76
7. Parris Street btw. Lancaster Street and Portland Street	1	1.78

The MDOT considers any roadway intersection or segment a high crash location if both of the following criteria are met:

- ***8 or more accidents and,***
- ***A Critical Rate Factor greater than 1.00***

As the data presented in the chart shows, there are no high crash locations within the defined study area.

SITE TRAFFIC

Site Trip Generation: The proposed mixed-use commercial retail project will include the following projected tenant space(s):

- Unit #001 Bar/Eatery – 2,382 sf with 55 seats
- Unit #002 Quality Restaurant – 3,109 sf with 65 seats
- Unit #003 Light Industrial Space – 5,957 sf
- Unit #004 Retail Space – 2,194 sf
- Unit #005 Coffee Shop – 1,356 sf
- Unit #006 Retail Space – 1,425 sf
- Unit #007 Art Gallery – 1,425 sf
- Unit #008 Retail Space – 1,983 sf
- Unit #009 Retail Space – 2,062 sf
- Unit #010 Bar/Eatery – 1,796 sf with 48 seats
- Unit #011 Fitness Center – 3,234 sf
- Unit #012 Brewery – 6,531 sf
- Office Space #1 – 1,860 sf
- Office Space #2 – 1,869 sf

Trip generation for the proposed mixed-use building is determined based upon a combination of both existing local business surveys and trip tables presented in the ninth edition of the Institute of Transportation Engineers "**TRIP GENERATION**" publication.

Table 1 below provides a summary of peak hour trip generation for the proposed "82 Hanover Street" project:

Table 1
"82 Hanover Street" Development
Trip Generation

Proposed Use	Building Unit No.	Building Unit Area	Land-Use Code	AM Peak Hour		PM Peak Hour		Saturday Peak Hour	
				Trip Rate	Trips	Trip Rate	Trips	Trip Rate	Trips
Bar/Eatery	001/010	103 seats	LUC 932	n/a	0	0.41 trips/seat	42	0.53 trips/seat	55
Quality Restaurant	002	65 seats	LUC 931	0.03 trips/seat	2	0.26 trips/seat	17	0.33 trips/seat	34
Light Industrial	003	5,957 sf	LUC110	0.92/1,000sf	5	0.97/1,000sf	6	0.14/1,000sf	1
Retail	004,006, 007,008, 009	9,251 sf	LUC 826	2.71/1,000sf (3)	25	2.71/1,000sf	25	2.71/1,000sf (3)	25
Coffee Shop	005	1,356 sf	Local Data (1)	n/a	96	n/a	68	n/a (4)	68
Fitness Ctr.	011	3,234 sf	LUC 492	1.41/1,000sf	5	3.53/1,000sf	11	2.78/1,000sf	9
Brewery	012	6,531 sf	Local Data (2)	n/a	0	n/a	23	n/a	61
Office	#1 & #2	3,729 sf	LUC 715	1.80/1,000sf	6	1.74/1,000sf	6	n/a	0
TOTAL					139		198		253

NOTES
(1) Trip estimate based upon local survey data collected at a Diamond Street Coffee Shop.
(2) Trip estimate based upon local survey data collected at a Westfield Street brewery.
(3) AM and Saturday trip rate based upon PM peak hour trip rate
(4) Saturday trip estimate based upon weekday PM peak hour data collected at Diamond Street Coffee Shop.

The "82 Hanover Street" multi-tenant commercial retail project is expected to generate a total of **139** trips during the AM peak hour, **198** trips in the weekday evening peak hour and **253** trips on a typical Saturday peak hour.

Site Trip Adjustments: The following trip adjustments were applied to the peak hour trip generation estimates:

Shared-Use Adjustment
Due to the diversity of proposed uses within the "82 Hanover Street" site, a number of the estimated vehicle trips, in actuality, visit more than one tenant space without leaving the building. These multi-purpose trips, if not accounted for, overestimate the traffic impact of the proposed site.

The National Cooperative Highway Research Program's (NCHRP) 684 Internal Trip Capture Estimation Tool was utilized in estimating the number of shared or captured trips generated by the proposed project. Copies of the spreadsheets used in the analysis are attached as an appendix to the report.

Other Modes of Transportation Adjustment
Both employees and visitors alike are expected to utilize other modes of transportation traveling to/from the proposed "*82 Hanover Street*" commercial development site. These other transportation modes include: transit, ridesharing, bicycle travel or walking. Traffic Solutions, in concert with Cushman Transportation Consulting, LLC are projecting that approximately 15% of the total trip generation of the proposed site will, in fact, use a mode of transportation other than the auto. A similar value of 15% was recently approved in the conduct of the traffic assessment for the proposed Bayside Bowl site.

The following tables provide a summary of the trip adjustments for each of the three peak hour time periods:

Peak Hour Trip Generation
Adjustment Summary
AM Peak Hour

Building Use	Total Trips	Shared Trip Adjustment	Other Modes Adjustment	Total Adjusted Trips
Bar/Eatery	0	0	0	**0**
Quality Rest.	2	0	0	**2**
Light Industrial	5	0	-1	**4**
Retail	25	-2	-3	**20**
Coffee Shop	96	-3	-14	**79**
Fitness Center	5	0	-1	**4**
Brewery	0	0	0	**0**
Office	6	-1	-1	**4**
TOTAL	**139**	**-6**	**-20**	**113**

Peak Hour Trip Generation
Adjustment Summary
PM Peak Hour

Building Use	Total Trips	Shared (1) Trip Adjustment	Other Modes Adjustment	Total Adjusted Trips
Bar/Eatery	42	-3	-6	**33**
Quality Rest.	17	-3	-2	**12**
Light Industrial	6	0	-1	**5**
Retail	25	-11	-2	**12**
Coffee Shop	68	-4	-10	**54**
Fitness Center	11	0	-2	**9**
Brewery	23	0	-3	**20**
Office	6	-1	-1	**4**
TOTAL	**198**	**-22**	**-27**	**149**

NOTES:
(1) Total shared trip reduction value spread proportionally amongst each proposed restaurant/coffee shop use.

Peak Hour Trip Generation
Adjustment Summary
Saturday Peak Hour (1)

Building Use	Total Trips	Shared (2) Trip Adjustment	Other Modes Adjustment	Total Adjusted Trips
Bar/Eatery	55	-3	-8	**44**
Quality Rest.	34	-3	-5	**26**
Light Industrial	1	0	0	**1**
Retail	25	-11	-2	**12**
Coffee Shop	68	-4	-10	**54**
Fitness Center	9	0	-1	**8**
Brewery	61	0	-9	**52**
Office	0	0	0	**0**
TOTAL	**253**	**-21**	**-35**	**197**

NOTES:
(1) Saturday peak hour of the "82 Hanover Street" site expected to occur in the evening after 5:00PM
(2) Shared trip reduction values based upon PM peak hour estimates.

Site Trip Generation: Vehicle trips generated during each of the noted peak time periods were assigned to/from the proposed site based upon directional trip distribution patterns presented in the Institute of Transportation Engineers 9th edition of the "**TRIP GENERATION**" handbook and locally obtained data. Those distribution patterns are listed, as follows, for each of the three peak hour time periods:

Land Use #110 – General Light Industrial

AM Peak Hour - Street	= 88% enter/12% exit
PM Peak Hour - Street	= 12% enter/88% exit
Saturday Peak Hour	= 47% enter/53% exit

Land Use #492 – Health/Fitness Club

AM Peak Hour - Street	= 50% enter/50% exit
PM Peak Hour - Street	= 57% enter/43% exit
Saturday Peak Hour	= 45% enter/55% exit

Land Use #715 – Single Tenant Office Building

AM Peak Hour - Street	= 89% enter/11% exit
PM Peak Hour - Street	= 15% enter/85% exit
Saturday Peak Hour	= n/a

Land Use #826 – Specialty Retail Center

AM Peak Hour - Street	= 56% enter/44% exit **(estimated)**
PM Peak Hour - Street	= 44% enter/56% exit
Saturday Peak Hour	= 50% enter/50% exit **(estimated)**

Land Use – Bar/Eatery **(Trip distribution percentages based upon LUC# 932)**

AM Peak Hour - Street	= n/a
PM Peak Hour - Street	= 57% enter/43% exit
Saturday Peak Hour	= 53% enter/47% exit

Land Use #931 – Quality Restaurant

AM Peak Hour - Street	= n/a
PM Peak Hour - Street	= 67% enter/33% exit
Saturday Peak Hour	= 59% enter/41% exit

Local Traffic Data – Coffee Shop **(Diamond Street Coffee Shop)**

AM Peak Hour - Street	= 64% enter/36% exit
PM Peak Hour - Street	= 40% enter/60% exit
Saturday Peak Hour	= 45% enter/55% exit **(Estimated based upon weekday PM Peak Hour)**

Local Traffic Data – Brewery **(Westfield Street Brewery)**

AM Peak Hour - Street	= n/a
PM Peak Hour - Street	= 61% enter/39% exit
Saturday Peak Hour	= 62% enter/38% exit

Table 3, as follows, presents the directional distribution patterns of the peak hour traffic generated by the proposed "82 Hanover Street" project:

Table 3
Site Trip Distribution Patterns
"82 Hanover Street"

Proposed Use	AM Peak Hour-Street		PM Peak Hour-Street		Saturday Peak Hour	
	Entering Trips	Exiting Trips	Entering Trips	Exiting Trips	Entering Trips	Exiting Trips
Bar/Eatery	0	0	19	14	23	21
Quality Restaurant	2	0	8	4	15	11
Light Industrial	4	0	1	3	0	1
Retail	11	9	5	7	6	6
Coffee Shop	51	28	22	32	24	30
Fitness Center	2	2	5	4	4	4
Brewery	0	0	12	9	32	20
Office	4	0	1	3	0	0
TOTAL	**74**	**39**	**73**	**76**	**104**	**93**

Site Trip Assignment: Vehicle trip assignments were prepared for both the AM and PM peak hour time periods based upon existing travel patterns measured at each study intersection.

The trip assignment models established for both peak hour time periods are described as follows:

AM Peak Hour

Entering Trips = *40% Portland Street Corridor*
= *50% Marginal Way/Preble/Elm Streets*
= *10% Kennebec Street*

Exiting Trips = *45% Portland Street Corridor*
= *55% Marginal Way/Preble/Elm Streets*
= *5% Kennebec Street*

PM Peak Hour

Entering Trips = *43% Portland Street Corridor*
= *33% Marginal Way/Preble/Elm Streets*
= *24% Kennebec Street*

Exiting Trips = *19% Portland Street Corridor*
= *67% Marginal Way/Preble/Elm Streets*
= *14% Kennebec Street*

Figure 2 presents the trip assignment for both the AM and PM peak hour time periods.

FUTURE TRAFFIC

The Traffic Impact Study has been prepared based upon a projected build-out year of 2020. MaineDOT's historical traffic report provides 2013 and 2016 average annual daily traffic projections for both Marginal Way near Forest Avenue and Portland Street at Preble Street; both sets of traffic data show a declining trend in traffic growth. To provide a conservative estimate of future design hour traffic conditions the 2018 design hour traffic values were increased by an annual growth rate of 1% per year to approximate travel conditions in 2020. Figure 3 presents the projected 2020 Design Hour Traffic volumes for the study intersections.

INTERSECTION OPERATIONAL ASSESSMENT

The 82 Hanover Street site is uniquely located within the West Bayside neighborhood where a web of City streets provides numerous low volume street connections to the principal arterial corridors serving the Portland Peninsular and beyond. Quantifying the actual traffic impacts of the proposed site on any single intersection within the expanded neighborhood is truly unpredictable. Site workers and visitors alike will select their travel paths to/from the site based upon the level of anticipated congestion. Travel options abound regardless of trip direction, as a result, the overall measured traffic impact of the project is considered very negligible. The site trip assignments illustrated on Figure 2 present a very conservative projection of the actual traffic impacts of the project. For example, motorists with a northly travel orientation were assigned to Marginal Way for connections to I-295, when in fact a motorist in an attempt to minimize the vehicle delays ever present at the Marginal Way/Franklin Arterial intersection may opt to use a travel route of Kennebec Street to Fox Street onto Washington Avenue as an alternative trip path to avoid the heavy delays on Marginal Way.

The presented travel assignments predict that approximately 30% of the site trips will circulate through the Hanover Street/Portland Street intersection. The intersection is not heavily traveled during either peak hour time period, and with relocation of the City's Public Works Department to Canco Road the actual increase in traffic at the intersection will likely be very minimal.

The multi-way STOP controlled intersection at Kennebec Street/Hanover Street is expected to experience a slight increase in traffic with full build-out of the proposed 82 Hanover Street site. However, again, the actual measured level of increased traffic will be tempered with relocation of the City's Public Works Department. The City is expected to complete a street reconstruction project late 2018, early 2019 that reconnects Somerset Street to Kennebec Street. This street connection will provide an alternative connecting route from West Bayside to the Franklin Arterial corridor, potentially reducing current traffic on Marginal Way.

The travel assignment model predicts the majority of the site trips will likley circulate through the Hanover Street/Marginal Way intersection directly connecting to either Forest Avenue, Preble Street and/or Franklin Arterial. Hanover Street connects directly with Marginal Way in very close proximity to the major signalized intersection of Preble Street/Elm Street/Marginal Way. Approximately 75-feet separate the two intersections.

The close spacing of the two intersections often restricts both left-turn entry and/or exit movements from Hanover Street, creating somewhat lengthy vehicle delays on the approach. Increased trips generated by the proposed project will increase the level of vehicle delay somewhat, although the actual traffic impacts will likely remain manageable. Numerous improvement strategies have been explored over the years for improving access to/from Hanover Street to Marginal Way; including turn restrictions, street closure, one-way circulation, etc. and each option, for varying reasons, were deemed unacceptable transportation improvements. Completion of the proposed Somerset Street reconnection project to Kennebec Street may provide a certain level of benefit providing motorists with an optional street connection to the Marginal Way corridor.

SUMMARY

1. The proposed "82 Hanover Street" multi-tenant commercial project can be expected to generate approximately 113 trips in the AM peak hour; 149 trips during the PM peak hour and 197 trips late in the afternoon on a typical Saturday.
2. MaineDOT's most recent three-year safety audit (2014 through 2016) for the section of Hanover Street between Marginal Way and Portland Street, and the segment of Parris Street between Kennebec and Portland Streets, shows the frequency of traffic crashes reported for each identified roadway segment and/or intersection is below MaineDOT's threshold criteria for identification of a high crash location.
3. The existing transportation grid that connects the 82 Hanover Street site to all points of destination within the Greater Portland area effectively limits major traffic impacts to any single traffic intersection. Motorists circulating to/from the 82 Hanover Street site will select from a number of travel route options

the least congested and most direct route to their desired destination. Overall, the actual measured traffic impacts of the proposed project are expected to be minimal.

4. The proposed Somerset Street connection to Kennebec Street project, programmed for construction this calendar year, with completion provides an alternative street connection to Marginal Way versus the present Hanover Street route. The street connection proposal, if successful, could provide an opportunity to modify traffic access from Hanover Street onto Marginal Way.
5. The proposed Transportation Demand Management Plan for 82 Hanover Street will also reduce the impact of the development on the street grid surrounding the project. It is estimated the plan will reduce trips by 5% within the first 3-5 years of the building's redevelopment and tenant lease-out. Elements of the plan include:
    - **Parking** - shared-use; unbundled from leases
    - **Subsidies** - partial and tenant co-sponsored subsidies of: transit passes, carpool launch incentives, monthly carpool vouchers, bicycle maintenance, footwear, U-Haul car share usage by multi-modal employees, bicycle safety courses, bikeshare memberships
    - **Outside Infrastructure** - improved sidewalks, lighting, entrances, trees, bicycle parking, Lancaster Court multi-use path, overall street feel
    - **Indoor Infrastructure:** bicycle and commuting gear storage, showers for each tenant space, transit passes available for purchase, transportation information
    - **Policy:** TDM language in tenant leases
    - **Marketing:** online transportation info, tenant new hire/relocated employee transportation orientations, social media use to create social proof, seasonal incentive campaigns
    - **Monitoring:** employee & visitor surveys, traffic observations, parking counts, annual reporting

SECTION 2

TRAFFIC ACCIDENTS

The Maine Department of Transportation's (MDOT) Accident Records Section provided the latest three-year (2014 through 2016) crash data for the section of Hanover Street between Marginal Way and Portland Street and the segment of Parris Street between Kennebec and Portland Streets.

MaineDOT's safety audit is summarized as follows:

2014 -2016 Traffic Accident Summary

Location	Total Crashes	Critical Rate Factor
1. Hanover Street @ Marginal Way	6	1.34
2. Hanover Street @ Portland Street	1	0.43
3. Hanover Street btw. Marginal Way and Kennebec Street	3	0.81
4. Hanover Street btw. Kennebec Street and Lancaster Street	1	0.85
5. Hanover Street btw. Lancaster Street and Portland Street	4	2.54
6. Parris Street @ Portland Street	2	0.76
7. Parris Street btw. Lancaster Street and Portland Street	1	1.78

The MDOT considers any roadway intersection or segment a high crash location if both of the following criteria are met:

- ***8 or more accidents and,***
- ***A Critical Rate Factor greater than 1.00***

As the data presented in the chart shows, there are no high crash locations within the defined study area.

DEFAULT TITLE FROM MAP DOCUMENT

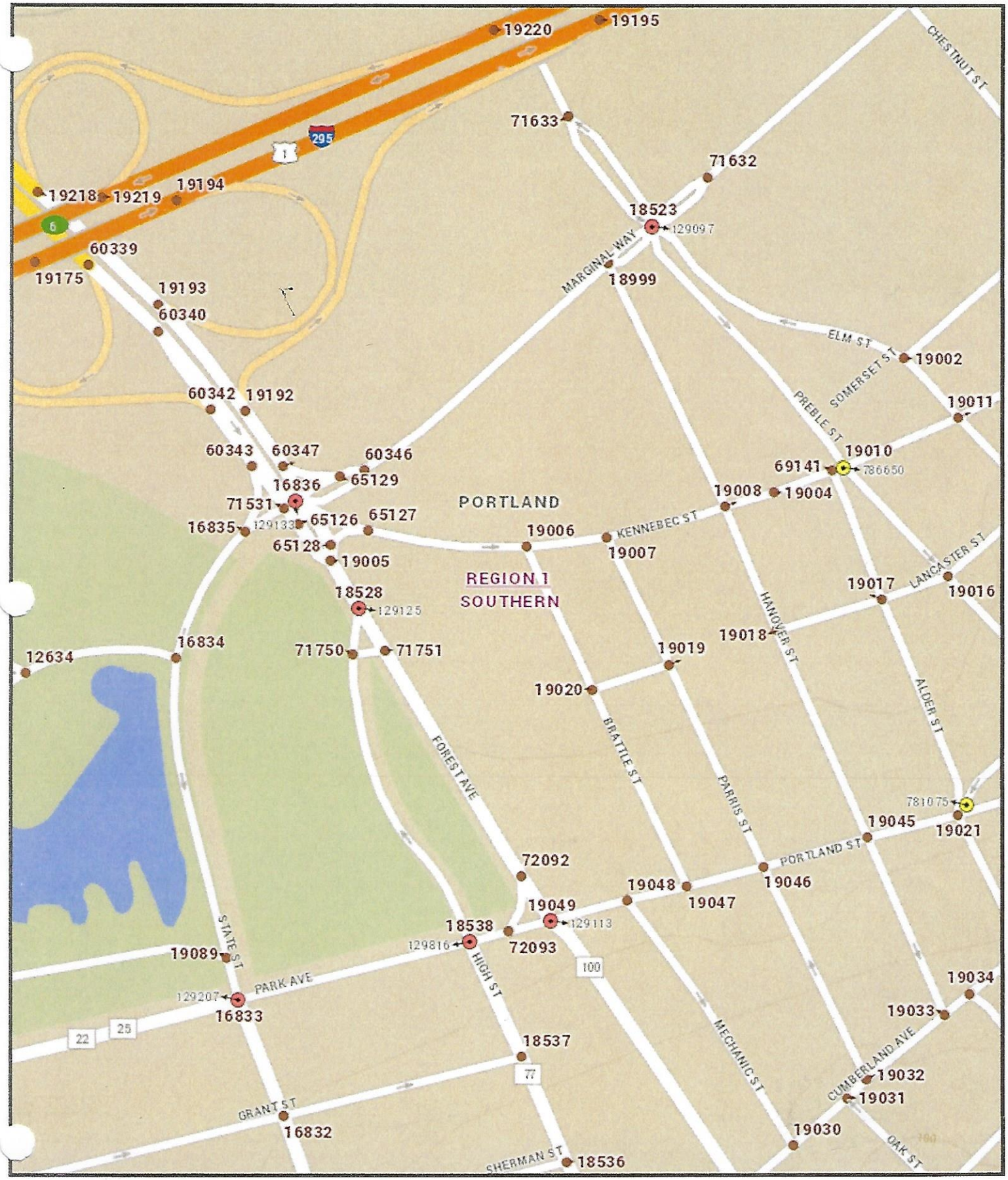

The Maine Department of Transportation provides this publication for information only. Reliance upon this information is at user risk. It is subject to revision and may be incomplete depending upon changing conditions. The Department assumes no liability if injuries or damages result from this information. This map is not intended to support emergency dispatch.

0.065 Miles

1 inch = 0.07 miles

Date: 3/29/2018
Time: 7:12:46 AM

Maine Department Of Transportation - Traffic Engineering, Crash Records Section

Crash Summary Report

Report Selections and Input Parameters

REPORT SELECTIONS

☑ **Crash Summary I** ☐ **Section Detail** ☑ **Crash Summary II** ☐ **1320 Public** ☐ **1320 Private** ☐ **1320 Summary**

REPORT DESCRIPTION

Hanover St in Portland

REPORT PARAMETERS

Year 2014, Start Month 1 through Year 2016 End Month: 12

Route: **0560345**	Start Node: **18999**	Start Offset: **0**	☐ **Exclude First Node**
	End Node: **19045**	End Offset: **0**	☐ **Exclude Last Node**

Maine Department Of Transportation - Traffic Engineering, Crash Records Section

Crash Summary I

Nodes

Node	Route - MP	Node Description	U/R	Total Crashes	Injury Crashes K	A	B	C	PD	Percent Injury	Annual M Ent-Veh	Crash Rate	Critical Rate	CRF
18999	0560345 - 0	Int of HANOVER ST MARGINAL WY	2	6	0	0	0	1	5	16.7	3.691	0.54	0.40	1.34
												Statewide Crash Rate:	0.15	
19008	0560345 - 0.11	0509428 POR,HANOVER,KENNEBEC ST.	2	0	0	0	0	0	0	0.0	1.151	0.00	0.51	0.00
												Statewide Crash Rate:	0.14	
19018	0560345 - 0.16	Int of HANOVER ST LANCASTER ST	2	0	0	0	0	0	0	0.0	0.413	0.00	0.60	0.00
												Statewide Crash Rate:	0.14	
19045	0560345 - 0.27	Int of HANOVER ST PORTLAND ST	2	1	0	0	0	0	1	0.0	1.676	0.20	0.47	0.00
												Statewide Crash Rate:	0.14	
Study Years: 3.00		NODE TOTALS:		7	0	0	0	1	6	14.3	6.931	0.34	0.34	1.00

Maine Department Of Transportation - Traffic Engineering, Crash Records Section

Crash Summary I

Sections

Start Node	End Node	Element	Offset Begin - End	Route - MP	Section Length	U/R	Total Crashes	K	Injury Crashes A	B	C	PD	Percent Injury	Annual HMVM	Crash Rate	Critical Rate	CRF
18999	19008	194689	0 - 0.11	0560345 - 0	0.11	2	3	0	0	0	1	2	33.3	0.00107	933.18	1155.07	0.00
Int of HANOVER ST MARGINAL WY				RD INV 05 60345											Statewide Crash Rate: 400.91		
19008	19018	194702	0 - 0.05	0560345 - 0.11	0.05	2	1	0	0	0	0	0	0.0	0.00024	1377.44	1626.47	0.00
0509428 POR,HANOVER,KENNEBEC ST.				RD INV 05 60345											Statewide Crash Rate: 400.91		
19018	19045	194720	0 - 0.11	0560345 - 0.16	0.11	2	4	0	0	0	0	4	0.0	0.00035	3861.49	1520.79	2.54
Int of HANOVER ST LANCASTER ST				RD INV 05 60345											Statewide Crash Rate: 400.91		
Study Years: 3.00				**Section Totals:**	0.27		8	0	0	0	1	6	12.5	0.00166	1607.50	1031.59	1.56
				Grand Totals:	0.27		15	0	0	0	2	12	13.3	0.00166	3014.07	1211.51	2.49

Maine Department Of Transportation - Traffic Engineering, Crash Records Section

Crash Summary Report

Report Selections and Input Parameters

REPORT SELECTIONS

☑ **Crash Summary I** ☐ **Section Detail** ☑ **Crash Summary II** ☐ **1320 Public** ☐ **1320 Private** ☐ **1320 Summary**

REPORT DESCRIPTION

Parris St in Portland

REPORT PARAMETERS

Year 2014, Start Month 1 through Year 2016 End Month: 12

Route: **0560565**	Start Node: **19007**	Start Offset: **0**	☐ **Exclude First Node**
	End Node: **19046**	End Offset: **0**	☐ **Exclude Last Node**

Maine Department Of Transportation - Traffic Engineering, Crash Records Section

Crash Summary I

Nodes															
Node	Route - MP	Node Description	U/R	Total Crashes	Injury Crashes K	A	B	C	PD	Percent Injury	Annual M Ent-Veh	Crash Rate	Critical Rate	CRF
19007	0560565 - 0	0509427 POR,KENNEBEC,PARRIS ST.	2	0	0	0	0	0	0	0.0	0.455	0.00	0.60	0.00
												Statewide Crash Rate:	0.14	
19019	0560565 - 0.06	Int of LANCASTER ST PARRIS ST	2	0	0	0	0	0	0	0.0	0.225	0.00	0.57	0.00
												Statewide Crash Rate:	0.14	
19046	0560565 - 0.16	Int of PARRIS ST PORTLAND ST	2	2	0	0	0	1	1	50.0	1.943	0.34	0.45	0.00
												Statewide Crash Rate:	0.14	
Study Years: 3.00		NODE TOTALS:		2	0	0	0	1	1	50.0	2.623	0.25	0.42	0.61

Maine Department Of Transportation - Traffic Engineering, Crash Records Section

Crash Summary I

Sections

Start Node	End Node	Element	Offset Begin - End	Route - MP	Section Length	U/R	Total Crashes	K	Injury Crashes A	B	C	PD	Percent Injury	Annual HMVM	Crash Rate	Critical Rate	CRF
19007	19019	194701	0 - 0.06	0560565 - 0	0.06	2	0	0	0	0	0	0	0.0	0.00012	0.00	1729.35	0.00
0509427 POR,KENNEBEC,PARRIS ST				RD INV 05 60565											Statewide Crash Rate: 400.91		
19019	19046	194722	0 - 0.10	0560565 - 0.06	0.10	2	2	0	0	0	0	2	0.0	0.00023	2922.37	1641.93	1.78
Int of LANCASTER ST		PARRIS ST		RD INV 05 60565											Statewide Crash Rate: 400.91		
Study Years:	3.00			**Section Totals:**	0.16		2	0	0	0	0	2	0.0	0.00034	1933.20	1521.24	1.27
				Grand Totals:	0.16		4	0	0	0	1	3	25.0	0.00034	3866.39	1800.51	2.15

Portland: Hanover & Portland
Thursday April 26, 2018
Rain
Count By: Dawn-Marie Fahey

File Name : Portland Hanover & Portland AM 042618
Site Code : 00426181
Start Date : 4/26/2018
Page No : 6

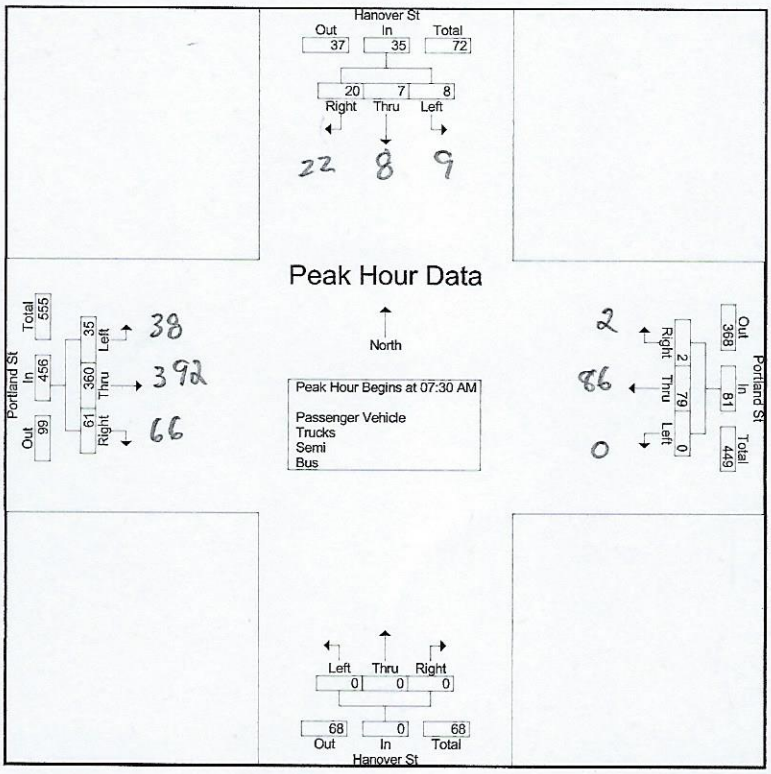

Portland: Hanover & Portland
Wednesday April 25, 2018
Rain
Count By: Dawn-Marie Fahey

File Name : Portland Hanover & Portland PM 042518
Site Code : 00425182
Start Date : 4/25/2018
Page No : 6

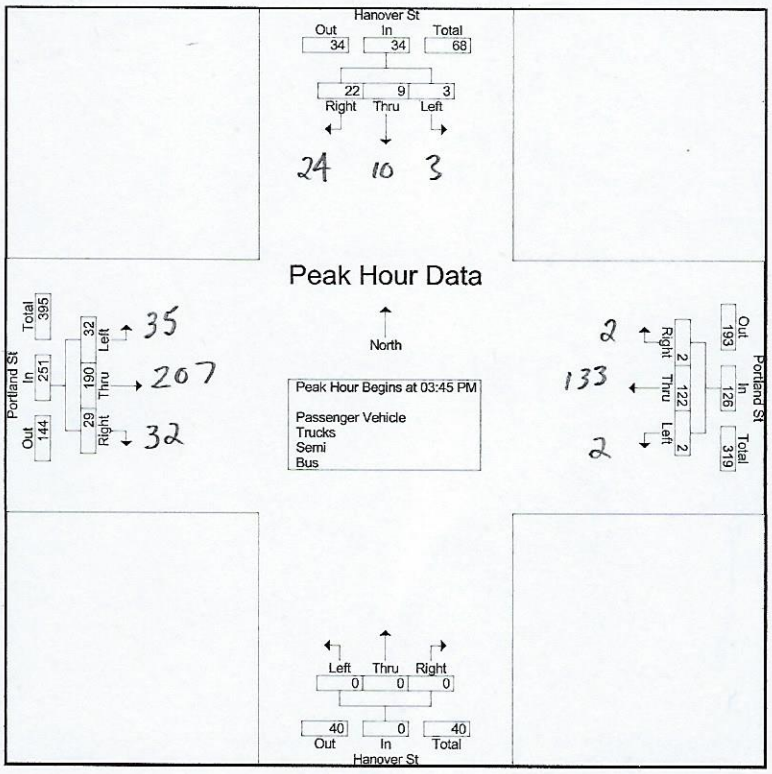

XX = seasonal adjustment

Portland: Hanover & Marginal Way
Tuesday April 10, 2018
Clear
Count By: Patrick Frie

File Name : Portland Hanover & Marginal AM 041018
Site Code : 04101879
Start Date : 4/10/2018
Page No : 6

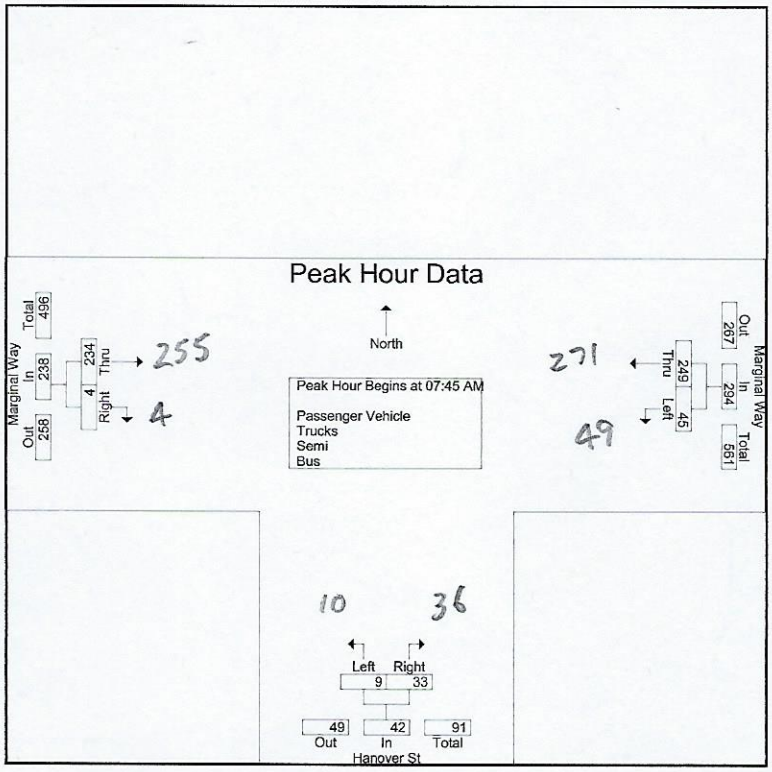

Portland: Hanover & Marginal Way
Tuesday April 10, 2018
Cloudy
Count By: Patrick Frie

File Name : portland hanover & marginal pm 041018
Site Code : 04101836
Start Date : 4/10/2018
Page No : 6

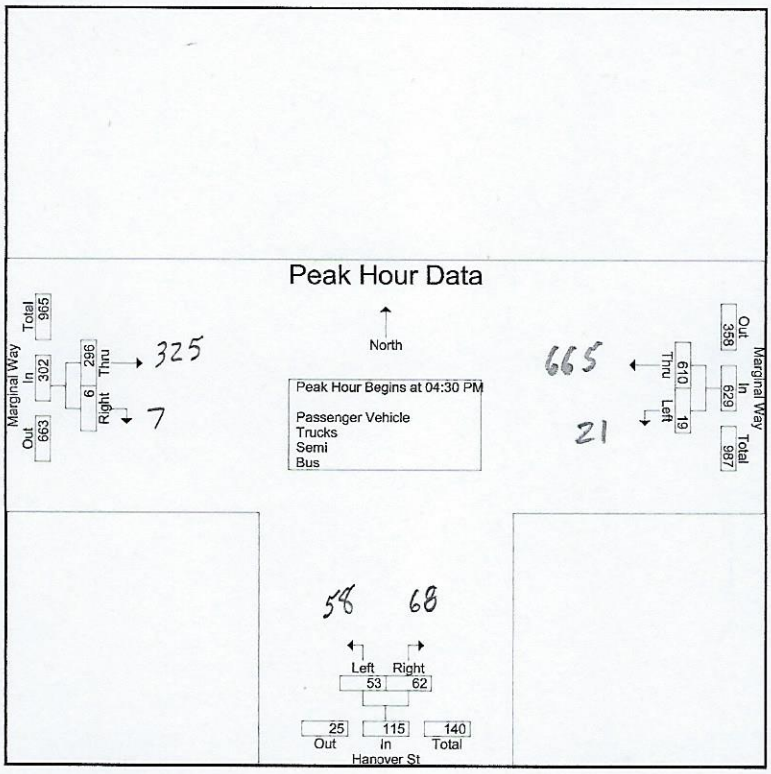

Portland: Preble & Marginal
Tuesday April 10, 2018
Clear
Count By: Dawn-Marie & James Fahey

File Name : Portland Preble & Marginal Way AM 041018
Site Code : 00410181
Start Date : 4/10/2018
Page No : 6

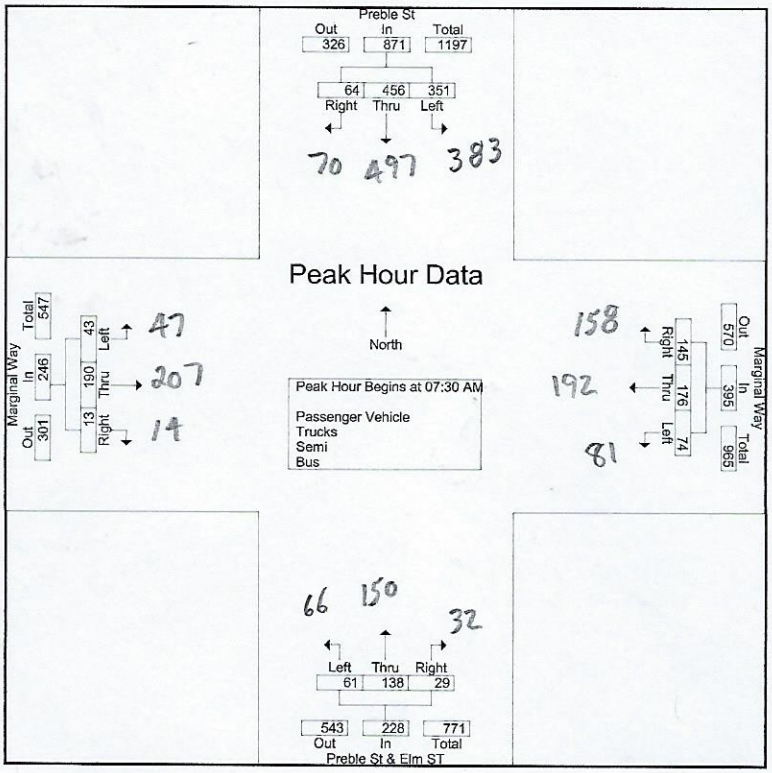

Portland: Preble & Marginal Way
Tuesday April 10, 2018
Cloudy
Count By: Dawn-Marie & James Fahey

File Name : Portland Preble & Marginal Way PM 041018
Site Code : 00410183
Start Date : 4/10/2018
Page No : 6

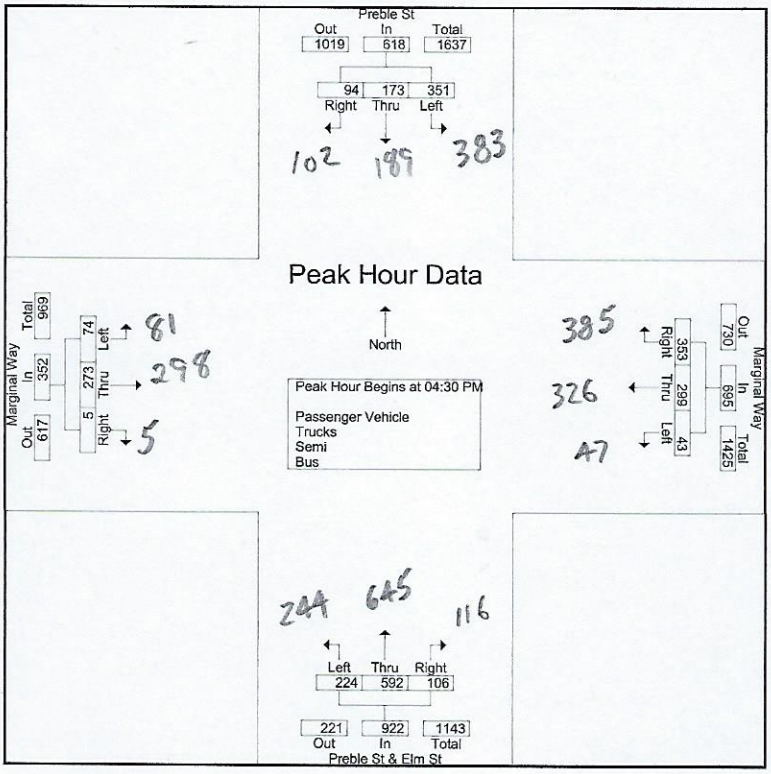

Portland:Kennebec & Hanover
Friday April 13, 2018
Clear
Count By: Dawn-Marie Fahey

File Name : Portland Kennebec & Hanover AM 041318
Site Code : 00041318
Start Date : 4/13/2018
Page No : 6

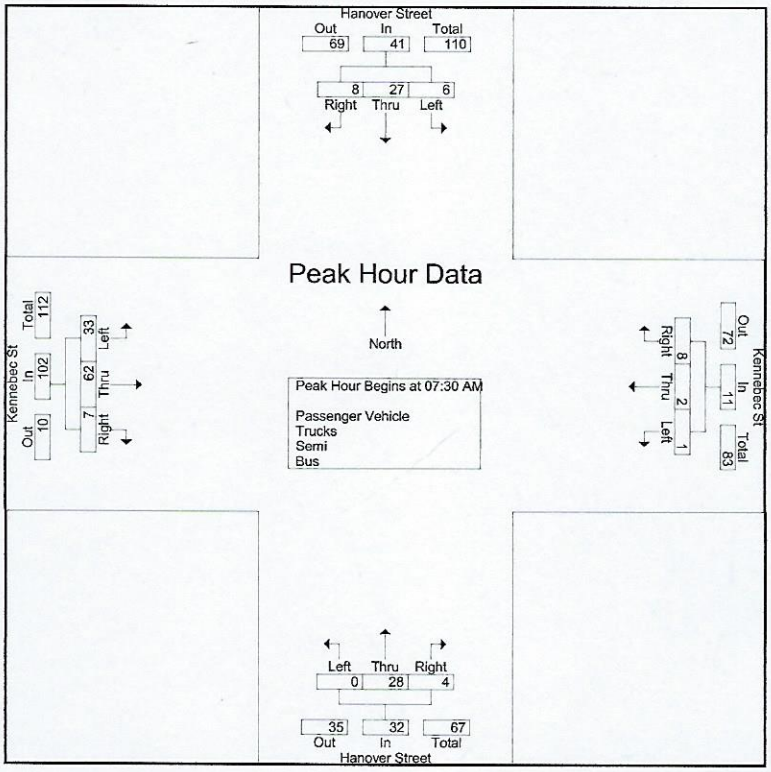

Portland: Hanover & Kennebec
Monday April 9, 2018
Clear
Count By: Dawn-Marie Fahey

File Name : Portland Kennebec & Hanover PM 040918
Site Code : 00040918
Start Date : 4/9/2018
Page No : 6

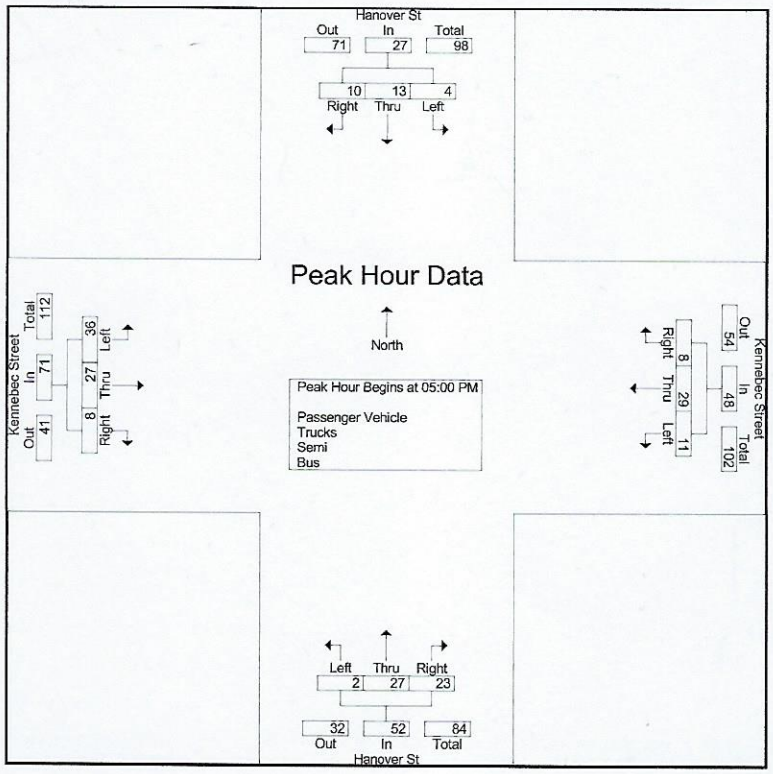

AM

Coffee By Design

	Cars IN	Cars OUT	TOTAL	Pedestrians IN	Pedestrians OUT
7:00-7:15	~~////~~ /	~~////~~ //	13		
7:15-7:30	~~////~~ //	~~////~~ ///	15		
7:30-7:45	~~////~~ ~~////~~ //	~~////~~	17		
7:45-8:00	~~////~~ /	~~////~~	11	////	/
8:00-8:15	~~////~~ /	~~////~~ /// 8	14	/	//
8:15-8:30	~~////~~ ~~////~~ ~~////~~ ////	~~////~~ //// 9	28	/	/
8:30-8:45	~~////~~ ~~////~~ ~~////~~ ~~////~~ /	~~////~~ ~~////~~ 10	31	//	/
8:45-9:00	~~////~~ ~~////~~ ~~////~~	~~////~~ /// 8	23		

96 trips

TOTAL VEHICLE TRIP

152

2 Hours

13 walking trips

317 total vehicle trips = 5 hours

27 total walking trips =

PM

Coffee By Design

	Cars IN	Cars OUT	TOTAL	Pedestrians IN	Pedestrians OUT
3:00-3:15	~~IIII~~ ~~IIII~~ B	~~IIII~~ ~~IIII~~ I	22	I	I
3:15-3:30	~~IIII~~ III	~~IIII~~ II	15		
3:30-3:45	~~IIII~~ III	~~IIII~~ III	16	I	I
3:45-4:00	~~IIII~~ I	~~IIII~~ IIII	15	II	
4:00-4:15	~~IIII~~	~~IIII~~ ~~IIII~~	15		II
4:15-4:30	II	II	4	II	
4:30-4:45	~~IIII~~ II	~~IIII~~	12		I
4:45-5:00	~~IIII~~ ~~IIII~~ I	~~IIII~~ ~~IIII~~ III	24		I
5:00-5:15	~~IIII~~ III	~~IIII~~ ~~IIII~~ II	20		
5:15-5:30	~~IIII~~	~~IIII~~ I	11	II	
5:30-5:45	II	II	4		
5:45-6:00	IIII	III	7		

68

165 trips total three hours

14 trips

The Bunker Brewery
Thursday, April 5, 2018

TOTAL PS		In	Out		Total (car)
3	4-4:15 I	1	II	2	4:00 6 Cars
1	4:15-4:30	0	I	1	
3	4:30-4:45 III	3		0	
7	4:45-5:00 ~~IIII~~	5	II	2	5:00 10 Cars
4	5:-5:15 III	3	I	1	
7	5:15-5:30 IIII	4	III	3	
5	5:30-5:45 III	3	II	2	
7	5:45-6:00 IIII	4	III	3	6:00 15 Cars
2	6-6:15 II	2	I	1	
3	6:15-6:30 I	1	II	2	
7	6:30-6:45 III	3	IIII	4	
2	6:45-7:00 I	1	I	1	7:00 14 cars

Bunker Brewery April 7, 2018

	IN			Out		
-3:15	𝍸 III	9	8	I	1	3:00 25 cars
-3:30	𝍸 𝍸	15	10	𝍸	5	
-3:45	𝍸 𝍸 III	21	13	𝍸 III	8	
-4:00	𝍸 III	59 14	8	𝍸 I	6	
-4:15	𝍸 II	61 11	7	IIII	4	4:00 44 cars
-4:30	𝍸	56 10	5	𝍸	5	
4:45	𝍸	46 11	5	𝍸 I	6	
4:45-5:00	𝍸 III	52 20	8	𝍸 𝍸 II	12	
5:00-5:15	𝍸 I	51 10	6	IIII	4	5:00 42 cars
5:15-5:30	IIII	56 15	4	𝍸 𝍸 I	11	
5:30-5:45	𝍸 I	56 11	6	𝍸	5	
5:45-6:00	III	9	3	𝍸 I	6	
6:00-6:15	I	9	1	𝍸 III	8	6:00 35 cars
6:15-6:30	III	10	3	𝍸 II	7	
6:30-6:45	II	6	2	IIII	4	
6:45-7:00	III	6	3	III	3	7:00

NCHRP 684 Internal Trip Capture Estimation Tool			
Project Name:	58 Fore Street	**Organization:**	Gorrill Palmer
Project Location:	Portland, Maine	**Performed By:**	ET
Scenario Description:	Max Build Out	**Date:**	13-Jul
Analysis Year:	2016	**Checked By:**	RED
Analysis Period:	**AM Street Peak Hour**	**Date:**	

Table 1-A: Base Vehicle-Trip Generation Estimates (Single-Use Site Estimate)

Land Use	Development Data (*For Information Only*)			Estimated Vehicle-Trips		
	ITE LUCs[1]	Quantity	Units	Total	Entering	Exiting
Office	710	56,588	SF	136	123	13
Retail	814	76,103	SF	57	34	23
Restaurant		-	SF	0	0	0
Cinema/Entertainment		-	SF	0	0	0
Residential	220	647	Units	330	66	264
Hotel	310	170	Units	95	57	38
All Other Land Uses[2]		1,800	SF	0	0	0
Total				618	280	338

Table 2-A: Mode Split and Vehicle Occupancy Estimates

Land Use	Entering Trips			Exiting Trips		
	Veh. Occ.	% Transit	% Non-Motorized	Veh. Occ.	% Transit	% Non-Motorized
Office						
Retail						
Restaurant						
Cinema/Entertainment						
Residential						
Hotel						
All Other Land Uses[2]						

Table 3-A: Average Land Use Interchange Distances (Feet Walking Distance)

Origin (From)	Destination (To)					
	Office	Retail	Restaurant	Cinema/Entertainment	Residential	Hotel
Office						
Retail						
Restaurant						
Cinema/Entertainment						
Residential						
Hotel						

Table 4-A: Internal Person-Trip Origin-Destination Matrix*

Origin (From)	Destination (To)					
	Office	Retail	Restaurant	Cinema/Entertainment	Residential	Hotel
Office		4	0	0	0	0
Retail	5		0	0	1	0
Restaurant	0	0		0	0	0
Cinema/Entertainment	0	0	0		0	0
Residential	4	3	0	0		0
Hotel	4	1	0	0	0	

Table 5-A: Computations Summary

	Total	Entering	Exiting
All Person-Trips	618	280	338
Internal Capture Percentage	7%	8%	7%
External Vehicle-Trips[3]	574	258	316
External Transit-Trips[4]	0	0	0
External Non-Motorized Trips[4]	0	0	0

Table 6-A: Internal Trip Capture Percentages by Land Use

Land Use	Entering Trips	Exiting Trips
Office	11%	31%
Retail	24%	26%
Restaurant	N/A	N/A
Cinema/Entertainment	N/A	N/A
Residential	2%	3%
Hotel	0%	13%

[1]Land Use Codes (LUCs) from *Trip Generation Manual*, published by the Institute of Transportation Engineers.

[2]Total estimate for all other land uses at mixed-use development site is not subject to internal trip capture computations in this estimator.

[3]Vehicle-trips computed using the mode split and vehicle occupancy values provided in Table 2-A.

[4]Person-Trips

*Indicates computation that has been rounded to the nearest whole number.

Estimation Tool Developed by the Texas A&M Transportation Institute

Project Name:	58 Fore Street
Analysis Period:	**Scenario 1 - AM Street Peak Hour**

Table 7-A: Conversion of Vehicle-Trip Ends to Person-Trip Ends

Land Use	Table 7-A (D): Entering Trips			Table 7-A (O): Exiting Trips		
	Veh. Occ.	Vehicle-Trips	Person-Trips*	Veh. Occ.	Vehicle-Trips	Person-Trips*
Office	1.00	123	123	1.00	13	13
Retail	1.00	34	34	1.00	23	23
Restaurant	1.00	0	0	1.00	0	0
Cinema/Entertainment	1.00	0	0	1.00	0	0
Residential	1.00	66	66	1.00	264	264
Hotel	1.00	57	57	1.00	38	38

Table 8-A (O): Internal Person-Trip Origin-Destination Matrix (Computed at Origin)

Origin (From)	Destination (To)					
	Office	Retail	Restaurant	Cinema/Entertainment	Residential	Hotel
Office		4	8	0	0	0
Retail	7		3	0	3	0
Restaurant	0	0		0	0	0
Cinema/Entertainment	0	0	0		0	0
Residential	5	3	53	0		0
Hotel	29	5	3	0	0	

Table 8-A (D): Internal Person-Trip Origin-Destination Matrix (Computed at Destination)

Origin (From)	Destination (To)					
	Office	Retail	Restaurant	Cinema/Entertainment	Residential	Hotel
Office		11	0	0	0	0
Retail	5		0	0	1	0
Restaurant	17	3		0	3	2
Cinema/Entertainment	0	0	0		0	0
Residential	4	6	0	0		0
Hotel	4	1	0	0	0	

Table 9-A (D): Internal and External Trips Summary (Entering Trips)

Destination Land Use	Person-Trip Estimates			External Trips by Mode*		
	Internal	External	Total	Vehicles[1]	Transit[2]	Non-Motorized[2]
Office	13	110	123	110	0	0
Retail	8	26	34	26	0	0
Restaurant	0	0	0	0	0	0
Cinema/Entertainment	0	0	0	0	0	0
Residential	1	65	66	65	0	0
Hotel	0	57	57	57	0	0
All Other Land Uses[3]	0	0	0	0	0	0

Table 9-A (O): Internal and External Trips Summary (Exiting Trips)

Origin Land Use	Person-Trip Estimates			External Trips by Mode*		
	Internal	External	Total	Vehicles[1]	Transit[2]	Non-Motorized[2]
Office	4	9	13	9	0	0
Retail	6	17	23	17	0	0
Restaurant	0	0	0	0	0	0
Cinema/Entertainment	0	0	0	0	0	0
Residential	7	257	264	257	0	0
Hotel	5	33	38	33	0	0
All Other Land Uses[3]	0	0	0	0	0	0

[1]Vehicle-trips computed using the mode split and vehicle occupancy values provided in Table 2-A

[2]Person-Trips

[3]Total estimate for all other land uses at mixed-use development site is not subject to internal trip capture computations in this estimator

*Indicates computation that has been rounded to the nearest whole number.

NCHRP 684 Internal Trip Capture Estimation Tool			
Project Name:	58 Fore Street	**Organization:**	Gorrill Palmer
Project Location:	Portland, Maine	**Performed By:**	ET
Scenario Description:	Max Build Out	**Date:**	13-Jul
Analysis Year:	2016	**Checked By:**	RED
Analysis Period:	**PM Street Peak Hour**	**Date:**	

Table 1-P: Base Vehicle-Trip Generation Estimates (Single-Use Site Estimate)

Land Use	Development Data (*For Information Only*)			Estimated Vehicle-Trips		
	ITE LUCs[1]	Quantity	Units	Total	Entering	Exiting
Office	710	56,588	SF	131	19	112
Retail	814	76,103	SF	207	94	113
Restaurant		-	SF	0	0	0
Cinema/Entertainment		-	SF	0	0	0
Residential	220	647	Units	401	260	141
Hotel	310	170	Units	100	55	45
All Other Land Uses[2]		1,800	SF	0	0	0
Total				839	428	411

Table 2-P: Mode Split and Vehicle Occupancy Estimates

Land Use	Entering Trips			Exiting Trips		
	Veh. Occ.	% Transit	% Non-Motorized	Veh. Occ.	% Transit	% Non-Motorized
Office						
Retail						
Restaurant						
Cinema/Entertainment						
Residential						
Hotel						
All Other Land Uses[2]						

Table 3-P: Average Land Use Interchange Distances (Feet Walking Distance)

Origin (From)	Destination (To)					
	Office	Retail	Restaurant	Cinema/Entertainment	Residential	Hotel
Office						
Retail						
Restaurant						
Cinema/Entertainment						
Residential						
Hotel						

Table 4-P: Internal Person-Trip Origin-Destination Matrix*

Origin (From)	Destination (To)					
	Office	Retail	Restaurant	Cinema/Entertainment	Residential	Hotel
Office		8	0	0	2	0
Retail	2		0	0	29	6
Restaurant	0	0		0	0	0
Cinema/Entertainment	0	0	0		0	0
Residential	6	9	0	0		4
Hotel	0	2	0	0	0	

Table 5-P: Computations Summary

	Total	Entering	Exiting
All Person-Trips	839	428	411
Internal Capture Percentage	16%	16%	17%
External Vehicle-Trips[3]	703	360	343
External Transit-Trips[4]	0	0	0
External Non-Motorized Trips[4]	0	0	0

Table 6-P: Internal Trip Capture Percentages by Land Use

Land Use	Entering Trips	Exiting Trips
Office	42%	9%
Retail	20%	33%
Restaurant	N/A	N/A
Cinema/Entertainment	N/A	N/A
Residential	12%	13%
Hotel	18%	4%

[1]Land Use Codes (LUCs) from *Trip Generation Manual*, published by the Institute of Transportation Engineers.

[2]Total estimate for all other land uses at mixed-use development site is not subject to internal trip capture computations in this estimator.

[3]Vehicle-trips computed using the mode split and vehicle occupancy values provided in Table 2-P.

[4]Person-Trips

*Indicates computation that has been rounded to the nearest whole number.

Estimation Tool Developed by the Texas A&M Transportation Institute

Project Name:	58 Fore Street
Analysis Period:	**Scenario 1 - PM Street Peak Hour**

Table 7-P: Conversion of Vehicle-Trip Ends to Person-Trip Ends

Land Use	Table 7-P (D): Entering Trips			Table 7-P (O): Exiting Trips		
	Veh. Occ.	Vehicle-Trips	Person-Trips*	Veh. Occ.	Vehicle-Trips	Person-Trips*
Office	1.00	19	19	1.00	112	112
Retail	1.00	94	94	1.00	113	113
Restaurant	1.00	0	0	1.00	0	0
Cinema/Entertainment	1.00	0	0	1.00	0	0
Residential	1.00	260	260	1.00	141	141
Hotel	1.00	55	55	1.00	45	45

Table 8-P (O): Internal Person-Trip Origin-Destination Matrix (Computed at Origin)

Origin (From)	Destination (To)					
	Office	Retail	Restaurant	Cinema/Entertainment	Residential	Hotel
Office		22	4	0	2	0
Retail	2		33	5	29	6
Restaurant	0	0		0	0	0
Cinema/Entertainment	0	0	0		0	0
Residential	6	59	30	0		4
Hotel	0	7	31	0	1	

Table 8-P (D): Internal Person-Trip Origin-Destination Matrix (Computed at Destination)

Origin (From)	Destination (To)					
	Office	Retail	Restaurant	Cinema/Entertainment	Residential	Hotel
Office		8	0	0	10	0
Retail	6		0	0	120	9
Restaurant	6	47		0	42	39
Cinema/Entertainment	1	4	0		10	1
Residential	11	9	0	0		7
Hotel	0	2	0	0	0	

Table 9-P (D): Internal and External Trips Summary (Entering Trips)

Destination Land Use	Person-Trip Estimates			External Trips by Mode*		
	Internal	External	Total	Vehicles[1]	Transit[2]	Non-Motorized[2]
Office	8	11	19	11	0	0
Retail	19	75	94	75	0	0
Restaurant	0	0	0	0	0	0
Cinema/Entertainment	0	0	0	0	0	0
Residential	31	229	260	229	0	0
Hotel	10	45	55	45	0	0
All Other Land Uses[3]	0	0	0	0	0	0

Table 9-P (O): Internal and External Trips Summary (Exiting Trips)

Origin Land Use	Person-Trip Estimates			External Trips by Mode*		
	Internal	External	Total	Vehicles[1]	Transit[2]	Non-Motorized[2]
Office	10	102	112	102	0	0
Retail	37	76	113	76	0	0
Restaurant	0	0	0	0	0	0
Cinema/Entertainment	0	0	0	0	0	0
Residential	19	122	141	122	0	0
Hotel	2	43	45	43	0	0
All Other Land Uses[3]	0	0	0	0	0	0

[1]Vehicle-trips computed using the mode split and vehicle occupancy values provided in Table 2-P

[2]Person-Trips

[3]Total estimate for all other land uses at mixed-use development site is not subject to internal trip capture computations in this estimator

*Indicates computation that has been rounded to the nearest whole number.

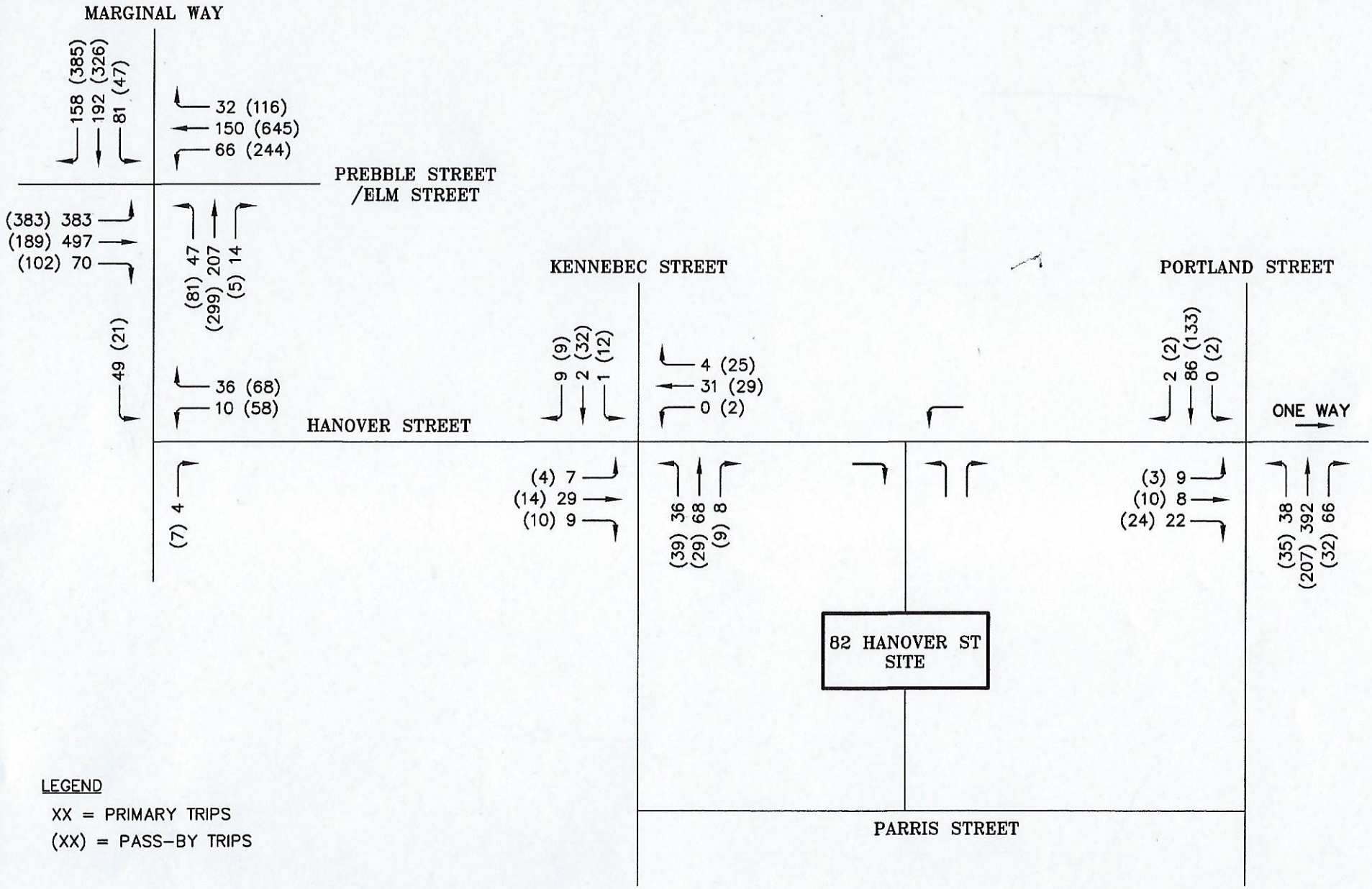

2018 DESIGN HOUR TRAFFIC

FIGURE 1

E:\LAND PROJECTS\34000\344399 TRAFFIC SOLUTIONS\82 HANOVER STREET.DWG

Project Name and Location:
"82 HANOVER STREET"
REDEVELOPMENT PROJECT

DATE: MAY, 2018

FIGURE: 1

TRAFFIC SOLUTIONS
235 BANCROFT STREET, PORTLAND, MAINE 04102-1730

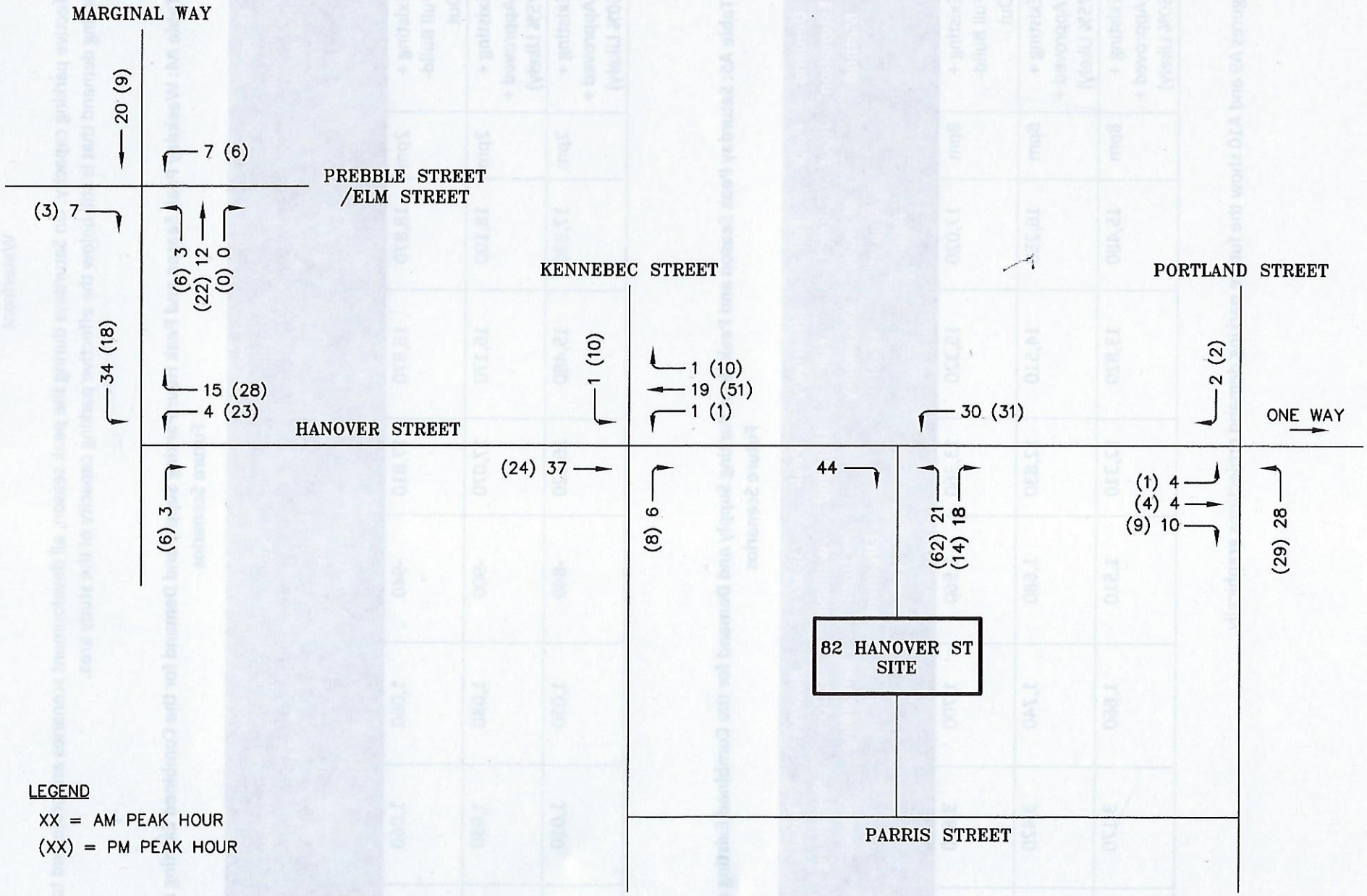

SITE TRIP ASSIGNMENT

FIGURE 2

E:\LAND PROJECTS\34000\344399 TRAFFIC SOLUTIONS\82 HANOVER STREET.DWG

Project Name and Location: "82 HANOVER STREET" REDEVELOPMENT PROJECT	TRAFFIC SOLUTIONS 235 BANCROFT STREET, PORTLAND, MAINE 04102-1730
DATE: MAY, 2018 — FIGURE: 2	

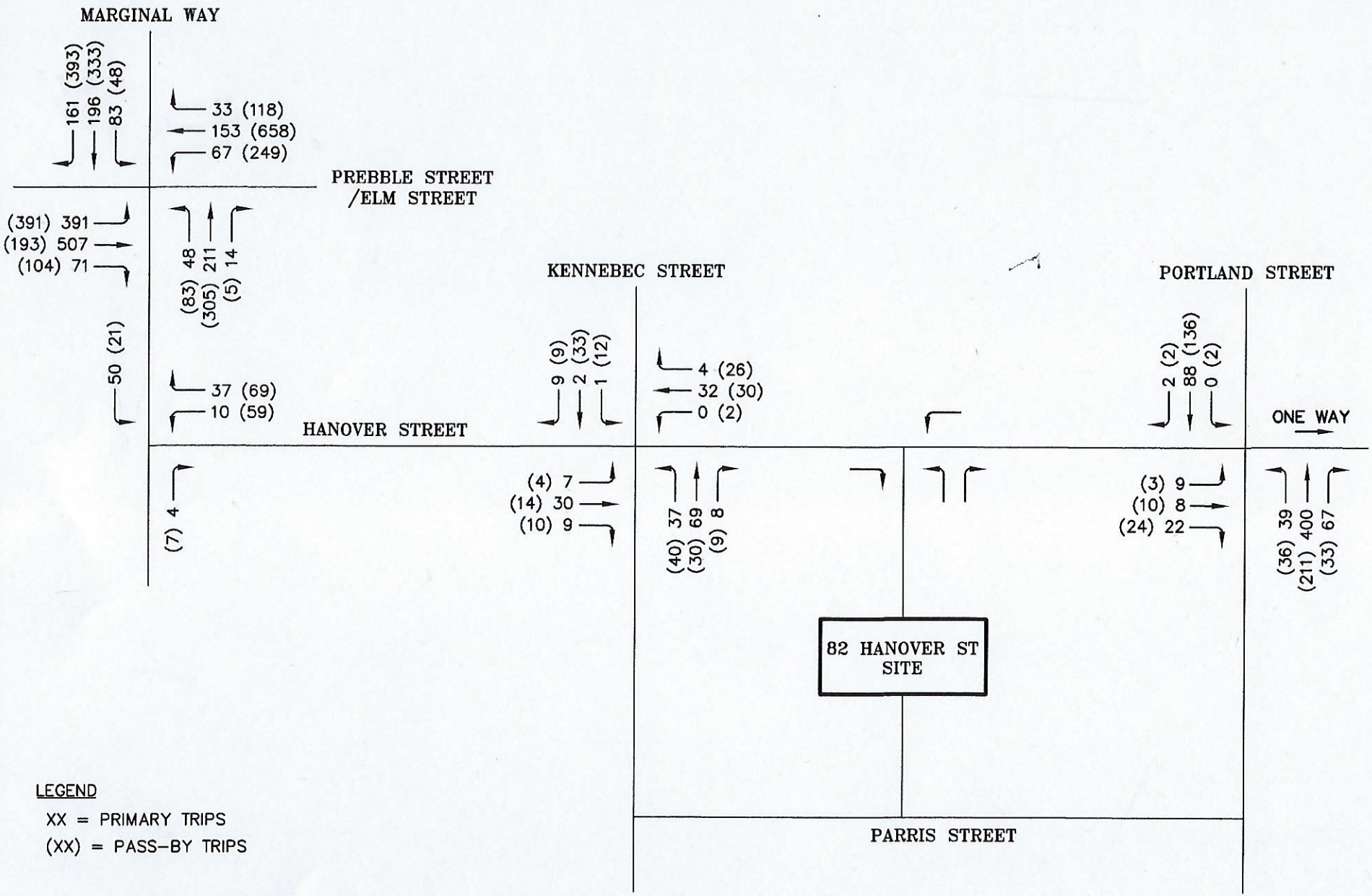

2020 DESIGN HOUR TRAFFIC

FIGURE 3

E:\LAND PROJECTS\34000\344399 TRAFFIC SOLUTIONS\82 HANOVER STREET.DWG

Project Name and Location
"82 HANOVER STREET"
REDEVELOPMENT PROJECT

DATE: MAY, 2018 | FIGURE: 3

TRAFFIC SOLUTIONS
235 BANCROFT STREET, PORTLAND, MAINE 04102-1730

ACORN ENGINEERING, INC.

82 Hanover Redevelopment
Level III Site Plan Application

Neighborhood Meeting Minutes

April 9, 2018 / 5:30 pm
Fork Food Lab

Project Team Attendees:

Tom Watson (TW):	Developer/Presenter (Tom Watson & Co. LLC)
Will Savage (WS):	Civil Engineer/Presenter (Acorn Engineering)
Sam Lebel (SL):	Civil Engineer/Note Taker (Acorn Engineering)
Ryan Senatore (RS):	Architect/Presenter (Ryan Senatore Architecture)
Bill Bray (BB):	Traffic Engineer (Traffic Solutions)
Sarah Cushman (SC):	Transportation Consultant/Presenter (Cushman Transportation Consulting, LLC)

Meeting started at approximately 5:35 pm. Appetizers and drinks were provided.

Presentation:

Tom Watson:

- Developer and Applicant
- Has Purchase & Sale Agreement for 82 Hanover with the City
- Introduced himself and his background
    - Started Port Property Management 25 years ago – manages 1,200 apartments in Portland and still owns the original Port Property Management building
    - Lives on Pine Street, children are in public Portland schools
    - Redeveloped neighboring Schlotterbeck & Foss building into 56 residential units
    - 4 reasons I presume the City liked my proposal for 82 Hanover
        - My local involvement and history
        - Move Port Property Offices out of nonconforming Parkside neighborhood to 82 Hanover
        - Redevelop Parkside property into residential units
        - City liked our proposed uses and vision for the property

- Introduced project team

Will Savage:

- Neighborhood Meeting is a City requirement for a Level III Application.
- Sign In Sheet and Meeting Minutes will be submitted to the City.
- Outlined the site within the neighborhood and pointed out neighboring businesses and zoning district.
- Site is in the B7 zone which promotes high density development with a mix of uses such as retail, office, and art studios promoting a quality pedestrian experience. Multimodal transportation is highly encouraged and implemented by bike racks and secure storage areas.
- Existing building on site at 40,768 SF and is currently an auto repair garage and office for the Department of Public Works. Industrial history to site, resulting in some environmental issues.
- Level III Site Plan submitted in February with a post-app meeting on March 28th, 2018. There have been updates to the plans and documents and submitted to the City today.
- Renovate building into mixed-use spaces with eateries, offices, and retailers. New uses and businesses to the area to enhance pedestrian activity and add vibrancy to the neighborhood.
- Development will promote modes of transportation other than automobiles such as walking, biking, or using public transportations.
- Sidewalks will be replaced and upgraded to ADA standards. Street trees and lighting will be added along Hanover and Parris.
- Bicycle Parking
    - 4 public spaces (Hanover and Parris)
    - 14 external private spaces (Lancaster Court)
    - 18 internal private spaces with room for a trailer. Secure and enclosed in building.
    - Total of 36 bicycle spaces and 1 trailer space.
- Project team is discussing the possibility of showers within each tenant's bathroom to encourage pedestrian and bicycle activity.
- Parking lot design was a result of challenges with the new City ROW. 5 foot sidewalk along building with regular parking adjacent, then a 20 foot one-way drive aisle, followed by a row of compact parking adjacent the new 6-foot sidewalk along Kennebec Street.
- The project team wanted 90-degree parking with a landscaped buffer along Kennebec, but it was not feasible given the remaining width in between the new ROW and the existing building.
- There will be landscaping islands at the 4 corners of the parking lot.
- Lancaster Court
    - Designed to be a fun and exciting space and allow tenants' patrons to enjoy an outside space with some small recreational activities and planters for screening.
    - This will also provide midblock permeability for pedestrians along Hanover and Parris Streets.
- Utilities
    - Designed in accordance with each company's requirements.
    - New underground electric. Eliminating 4 overhead connections.
    - Proposed 6" fire line and 4" domestic. Building will be sprinkled.
    - Sewer will go to the municipal system.
- Grading & Drainage
    - Mostly remaining the same as what is currently there

    - 2 new catch basins to go to the municipal system with roof drains
- Notable Waivers Requested
    - We are asking for 50% compact spaces. 20% is the usual allowance; however, there is no room on site to accommodate a greater amount of standard spaces. Compact spaces are usually 8'x15'. We are proposing the compact spaces be 9'x15'.
    - We are asking for 4 curb cuts (one-way driveway and Lancaster Court). There are currently 6 curb cuts. We will be closing 2 along the overhead doors with 2" of mountable curb and narrowing the 2 curb cuts that allow ingress/egress to the parking lot, thus improving the existing condition.
- Based on the City's comprehensive plan, we believe this is an exciting opportunity for the City to increase the available retail/office space with Bayside. The vision is to create a shared-use office to support Portland's entrepreneurial environment. The development's proximity to residential housing as well as amenities such as showers will allow bicyclists and pedestrians to effectively link housing, jobs, and services.

Sarah Cushman:

- TDM = Traffic Demand Management. Requested by the City so we have a plan to reduce the amount of people who drive to the site alone.
- This slide and presentation is a preview of the entire document. I have a hard copy here tonight if anyone is interested.
- Highlights:
    - We will manage parking well by implementing multiple strategies
        - Shared use parking which is unbundled from the leases.
        - Some parking at the residential lofts at Schlotterbeck & Foss may be leased
        - Subsidies for those who use alternative forms of transportation such as same day service for bicycle commuters (Port City Bikes across the street), equipment and footwear subsidies, transit passes
        - Uhaul Carshare within the neighborhood
        - Uber/Lyft is readily available – an example of a subsidy would be if you carpool to work, but need to go somewhere in the middle of the day and you don't own the carpooling vehicle…..the Uber/Lyft ride may be subsidized.
    - The walkability of Bayside is improving with more developments and redevelopments.
    - This project is a leading example of improving the walkability with new sidewalks, awnings, lighting, and street trees. Overall there will be a more inviting pedestrian feel.
    - This project has also prioritized bike storage with consideration of electric and cargo bicycles. The designated bike room has 1st floor access and will be secure. Each tenant will also likely have a shower.
    - The TDM will be included in leases so tenants will understand from the beginning.
    - Each business can incentivize and encourage multimodal transportation
        - Create a social norm to use alternative methods of transportation
        - Identify barriers and usage percentages
- The goal is achievable – 5% reduction in 3-5 years with reassessment at the 1 year mark.
- Overview of multimodal map
    - 7-minute walk to Metro station
    - Even shorter to the Forest Ave and Congress Street corridors for bus routes
    - Extensive bicycle parking on site

- Access to Back Cove trail network
- Several designated bicycle lanes in proximity to the site
- Bayside is missing some sidewalk links; however, it is walkable and is improving with time.

Ryan Senatore:

- Interior/Floor Plans
  - Each unit divided for separate tenants. Walls are somewhat flexible
  - Central corridor with main entry
  - Designated bicycle room
  - Overall, floor plan is designed to be flexible and comprised of mixed-use businesses
  - Building will have as many openings as it needs to provide access to the sidewalks
  - Lots of glass and light
  - Recessed entries with signage and lighting
  - Outdoor patio space for a few of the tenants
  - Partial second floor will be bright to encourage a productive office space
- Elevations:
  - New glazing, improving aesthetics and energy efficiency
- 3D Renderings:
  - Multiple entrances with blade signs
  - Enlarged windows, overall improvement of the façade with some brick repair
  - Street views: welcoming to pedestrians. Building enhanced by street trees
  - Bright second story
  - Active patio spaces with drinking, light eating, and light recreational activities. Patio oriented with southeasterly exposure and plenty of sun. It lets the tenants spill outside and enjoy their experience in the Bayside neighborhood.

<u>Comments, Questions & Answers:</u>

Please note that the following questions and answers were not recorded verbatim and aim to represent and summarize the actual questions, answers, and discussion that took place at the meeting.

Q: What is the timeline for the project?

TW: Ideally, we would start June 1. I anticipate 2 years for full occupancy (June 2020). The construction pieces will occur relatively quickly. Hopefully it will be done by the end of the year. If not, by summer of 2019.

Q: Who are the expected tenants by 2020? What type?

TW: I can't disclose names, but we expect a brewery/brewpub, restaurant, bar, art gallery, coffee shop, etc.

Q: Will the coffee shop have patio space?

TW: Right now those floor areas are bigger than a coffee shop would need, but the patio could potentially be space for both coffee and restaurant/bar.

WS: This is an example of the value of the neighborhood meeting. We get great input from the potential users/patrons.

Q: The asphalt and patio will be warm. Can there be more trees to cool the area?

RS: We do have some planter boxes in the rear

TW: We will also have umbrellas at the tables. There is a City easement for the sewer, restricting landscaping.

Q: Can there be more trees within the parking lot?

TW: Site is restrained. Some of 82 Hanover's land was taken for Kennebec Street. I thought I was bidding on an "as is where is" parcel. If we had the room we'd do more landscaping.

Q: What will they do with the new land?

WS: There will be new on-street parking, but it eliminated our option to provide landscaping in between the sidewalk and parking lot.

Q: Have you looked at replacing some asphalt with non-impervious surfaces?

WS: The building is above the floodplain in this area so we're not concerned with water flooding the building. Overall, we're reducing the impervious area on site through landscaping. We like porous pavement, but you need an acre of it before an asphalt plant will dedicate their operations to this type of pavement formula. We've used it at the IMT and 547 Riverside, but those are larger projects.

C: I suggest you speak with other developers to reduce the flooding and encourage less impervious area in this area.

WS: We always look to provide quality and quantity treatment. The existing building and parking requirement provides a challenge.

TW: We won't be doing residential because of increasing construction costs. The units would be too expensive.

Q: What about the Parkside residential project?

TW: That project will be difficult financially, but I want to follow through on what I said I'd do in the proposal.

C: I would rather see 82 Hanover as a repurposed building that has history rather than a new box for housing.

C: We'd like to see more commercial uses in the neighborhood.

Q: Has there been a design review? Any feedback?

RS: Yes, the City provided limited feedback.

C: I'd like to see more patios around the building.

TW: The parking is constraining the site.

Q: Are there roof decks?

TW: It would cost close to $1 million and the construction budget is already too high. There is a possibility that in 7 years, leases would go up and we could get a loan to implement elevators and a roof deck.

SC: Are there any pavers in the patio?

WS: Right now they are concrete, but they may be pavers.

Q: The ceilings are high. Can you get a full second story or lofts?

RS: At 14 feet, it's not quite enough room to be comfortable or meet the building code.

WS: Any other thoughts on the uses?

C: It would be nice to have a market like Rosemont for produce.

Q: Have you named the building?

BB: It used to be called the General Store because there used to be a little store in the second story. The building served as horse stables back in the day.

Q: When was it built?

C: Around 1890.

TW: We didn't apply for a tax credit so we could allow tenants some flexibility. The building will look historic though.

C: It will be a nice addition to Bayside. Pleased to see the building will be repurposed.

Q: Are there restrictions on how different the floor plans can look?

RS: The architecture will be cohesive. Blade signs can have each tenants' logo. All the canopies will be the same with consistent fenestration.

C: Maybe you could have one door to two businesses.

TW: That's a possibility.

C: Its nice to see the mixed use commercial development versus another high end condominium project.

C: I like to see businesses that the neighborhood actually needs. This is not fully in your control, but foot traffic would be nice.

WS: If you'd like more information on the project and the next steps, email the Planner, Nell Donaldson.

Meeting concluded at approximately 6:45 pm.

The abovementioned material was as interpreted and recorded from handwritten notes. Please note and relay any discrepancies or disputed information in the recorded minutes to the below address so that they can be reviewed, revised, and resubmitted as necessary.

Recorded by,

Sam Lebel, E.I.
Design Engineer
Acorn Engineering, Inc.
slebel@acorn-engineering.com

82 Hanover Neighborhood Meeting Sign-In Sheet

1. Sam Lebel
2. Bill Bray
3. Sarah Cushman
4. Nancy Mineart
5. Bianca Garber
6. Ron Spinella
7. Sarah Michniewicz
8. John Herrigel
9. Paul Waring
10. Susan McCluskey
11. Laura Cannon
12. Will Savage
13. Ryan Senatore
14. Tom Watson
15.
16.
17.
18.
19.
20.
21.
22.
23.
24.
25.
26.
27.
28.
29.
30.
31.
32.
33.
34.
35.
36.
37.
38.
39.
40.
41.
42.
43.
44.
45.
46.
47.
48.
49.
50.
51.
52.
53.
54.

ACORN ENGINEERING, INC.

Planning Division
City of Portland, Maine
389 Congress Street, 4th Floor
Portland, ME 04101

April 11, 2018

Subject: 82 Hanover Neighborhood Meeting

I, Will Savage, hereby certify that a neighborhood meeting was held on April 9, 2018 at the Fork Food Lab at 5:30 pm.

I also certify that on March 30, 2018, invitations were mailed to the following:

1. All addresses on the mailing list provided by the Planning Division which includes property owners within 500 feet of the proposed development.

2. Residents on the "interested parties" list.

3. A digital copy of the notice was also provided to the Planning Division (jmy@portlandmaine.gov and ldobson@portlandmaine.gov) and the assigned planner to be forwarded to those on the interested citizen list who receive e-mail notices.

Sincerely,

Date: 4/11/18

William H. Savage, P.E.
Principal - Project Manager
Acorn Engineering, Inc.

Included with this certification are:

1. Copy of the invitation sent
2. Sign-in sheet
3. Meeting minutes

A C O R N

ENGINEERING, INC.

Dear Neighbor: March 30, 2018

On behalf of Tom Watson & Co., LLC we are pleased to invite you to a neighborhood meeting to discuss our plans for the proposed redevelopment of the Public Works repair facility at 82 Hanover St. within the B-7 Mixed Development Zone in Portland. This project includes the renovation of the existing building into multiple uses including eateries, offices, and retailers with associated site improvements. If you previously received an invitation for April 3rd, please disregard it as the meeting has been rescheduled to:

Meeting Location: Fork Food Lab (Tasting Room) – 72 Parris St. Portland, Maine 04101
Meeting Date: Monday, April 9, 2018
Meeting Time: 5:30 p.m.

The City code requires that property owners within 500 feet of the proposed development and residents on an "interested parties list" be invited to participate in a neighborhood meeting. A sign-in sheet will be circulated and minutes of the meeting will be taken. Both the sign-in sheet and minutes will be submitted to the Planning Board.

If you have any questions regarding the neighborhood meeting, please don't hesitate to call me or the office at 775 – 2655. We look forward to seeing you at the meeting.

Sincerely,

William H. Savage, P.E. - Principal
Acorn Engineering, Inc.

A C O R N Engineering, Inc. • www.acorn-engineering.com
207-775-2655 • PO Box 3372 • Portland • Maine • 04104

ACORN ENGINEERING, INC.

Nell Donaldson – Senior Planner
Planning Division, City of Portland
389 Congress Street
Portland, ME 04101

April 9, 2018

Subject: Comment Response Letter
82 Hanover St. Redevelopment – Portland, Maine

On behalf of Tom Watson & Co., LLC we are pleased to respond to the comments that we've received by multiple reviewers. The comment is provided in italics followed by Acorn's response.

Nell Donaldson, Planning

Comment – *As with sidewalk repair, there are areas of the frontage for which curbing is missing or in poor condition and replacement/repair may be necessary.*

Response – Please refer to the revised Site Plan. Per reviewers' request, the applicant is now proposing to construct new concrete sidewalks to City standards along Parris and Hanover. As part of this construction, the curbing will be reset or replaced in accordance with the City standards.

Comment – *Based on preliminary conversations with Fire, it appears that they will need 20' clear in the ROW.*

Response – Please see the revised Site Plan – we have removed the proposed on-street parking along the building-side on both Parris and Hanover. The clear width is now approximately 25 feet.

Comment – *Per the sewer easement in Lancaster, the city holds the right to enter Lancaster for purposes of sewer replacement or repair. This access needs to be maintained:*

- *The transformer pad should be relocated out of the Lancaster easement area.*
- *The bike racks should be moved as well. Could these be relocated to the front of the building?*
- *Please provide details on the Lancaster patios. Are these raised in elevation? What are the rectangles between the patio areas?*
- *Please provide a detail for the planter boxes.*

Response – No permanent structure has been proposed directly over the 48" sewer channel, thus maintenance activities will be feasible. It should also be noted that per discussions with the Director of Public Works, the planned maintenance activity for this sewer channel is to slip line the channel which is a trenchless method of pipe rehabilitation. This widely accepted technology mitigates the need for excavating a trench along the length of the sewer channel.

- Transformer Pad - Due to site constraints and the City increasing their right-of-way by obtaining 2,576 square feet of the Applicant's land along Kennebec St, the only available location for the transformer is behind the building along Lancaster Court. The edge of the concrete transformer pad will maintain approximately 16" of horizontal distance from the face of the sewer pipe, allowing for maintenance activities. The transformer pad has been relocated to be adjacent to the building to the greatest extent feasible.
- Bike Racks - There is no available space at the front of the building as we are already proposing one row of compact spaces. We are now proposing to keep the stadium-style bike rack at the rear with an additional two public bike racks as seen on the revised Site Plan.
- Lancaster Patios - The patios will be flush with the surrounding pavement to provide simple grading transitions and stormwater flows. The rectangles shown between the patios are planter boxes.
- Planter Box - Please see the revised details sheets for the planter box detail.

Comment – *Incorporate some measure into plan to prevent parking encroachment on Kennebec Street sidewalk. This may double as screening.*

Response – Due to the reasons described in the above responses, there is no room for a fence or other technique to be implemented. However, there will be a 7" curb reveal which is higher than the clearance of most compact and subcompact cars. This will prevent vehicles' overhang from encroaching into the public sidewalk. The spaces along Kennebec Street will be specifically designated for compact spaces and signage may be included designating compact or smaller vehicles while also prohibiting encroachment into the public sidewalk.

Comment – *Please check that the bike rack detail is consistent with the TM.*

Response – The detail provided in the initial submission refers to the internal private bicycle rack. This is proposed to stay; however, we have added public bicycle hitches along the Hanover and Parris Street sidewalks. The corresponding detail has been included within the revised detail sheets.

Comment – *Can any of the overhead utilities be retired with the installation of underground services from Parris?*

Response – Yes, all existing overhead lines will be removed as part of the project. This includes the utility pole on site. Please refer to the revised Utility Plan, C-20 for the specific locations.

Comment – *Please provide more information on the solid waste enclosure proposed for the adjacent property, including plans for an easement and screening.*

Response – There is no longer any exterior solid waste proposed on the abutting parcel. Waste will be handled internally and a private company will be contracted with to dispose of solid waste.

Comment – *Please provide ability to serve letters.*

Response – The letters to each utility company can be found in Document I. Utilities. Two responses have been received and are also included in this document. We will upload additional responses

upon receipt.

Comment – *Exterior Lighting*

- *Please provide Bayside street light fixtures on Parris and Kennebec Streets.*
- *Consider approach to site lighting along Lancaster. There is an existing light fixture near the main south side entrance. Does this remain? New wall packs are proposed for the eastern half of this area, but none are proposed for the western half. Building-mounted lighting at regular intervals along this entire façade might work better to light this area. Likewise for the Hanover frontage, which will not have street lights on the project side.*

Response –

- Please refer to the revised Site Plan which now proposes two medium scale Bayside light fixtures along Parris Street and two Bayside fixtures along Kennebec St for a total of four new lights.

- We have added architectural lights on the building along Lancaster and Hanover Street. Please refer to Document P. Lighting for more information.

Comment – *Please add formal waiver requests for:*

- *Street trees*
- *Landscaping*
- *Curb cuts (As mentioned in our meeting last week, consider closing one of the curb cuts to the overhead doors if at all feasible.)*

Response – Please refer to the revised Document M. Waivers for the formal requests which also includes Tom Errico's waiver requests.

Comment – *Provide plans to show interim condition on Kennebec*

Response – Please refer to the revised Construction Management Plan and Report which further outline how to handle the interim construction phase between the private redevelopment and the Kennebec Street improvements.

<u>Tom Errico, Traffic</u>

Comment –*A MaineDOT Traffic Movement Permit (TMP) is required for the project based upon trip generation estimates. Accordingly, the Applicant will be submitting a TMP Application with the intent of scheduling a traffic study scoping meeting. The study is likely to include, at a minimum, the Hanover Street intersections with Portland Street and Kennebec Street and the Marginal Way/Hanover Street intersection. I noted that a financial contribution towards the implementation of transportation system improvements in the project vicinity may be required and would be considered as part of the traffic study.*

Response – The TMP was submitted separately today April 9th, 2018. The project now proposes to reconstruct the sidewalks along Hanover and Parris Streets. As such, it is requested that the cost of this work be put towards any required contribution towards transportation system improvements.

Comment – *The site plan design will likely result in vehicle encroachment for the parking spaces abutting the 6-foot sidewalk along Kennebec Street. Redesign of the parking lot layout or provision of barrier treatment should be considered to prevent encroachment.*

Response – The parking row abutting the Kennebec Street sidewalk is designed to be for compact vehicles or smaller. Vehicles that are allowed to park in these spaces will only be comprised of the compact, subcompact, and minicompact classes. Vehicles longer than 15 feet will not be allowed to park in these spaces. Furthermore, signage may be added to the nose of the parking stalls forbidding motorists to encroach on the sidewalk (in the event the vehicle has a clearance greater than 7"). Please see below for a representation of a vehicle anticipated to use these spaces. The effective clearance is approximately 6.25" Thus, the vehicle would not be able to encroach on the sidewalk due to the 7" curb reveal.

Comment – *The project site plan includes several driveways and conditions do not meet City Technical Standards for number of driveways. The Applicant shall provide documentation in support of a formal waiver request for the number of driveways. Reduction in the number of driveways or intended function should be considered.*

Response – A waiver request has been provided in Document M Waivers. Please also refer to the revised Site Plan in which we are proposing to close the existing curb cuts in front of the overhead doors. Furthermore, the two existing curb cuts closest to Kennebec Street are proposed to be narrowed. Overall, the existing condition is improved upon with the closing of two curb cuts and the reduction in length of two curb cuts.

Comment – *The project will require off-site parking to satisfy peak parking demand. I would note that shared parking opportunities with nearby businesses, particularly those that have offsetting time of day parking demand characteristics would be acceptable.*

Response – The Applicant is exploring this option. A formal agreement may be made or requested once the traffic movement permit has been submitted.

Comment – *Any changes that increase public on-street parking supply cannot be used for meeting the projects parking requirements.*

Response – We have not included the gain in on-street parking towards the site's parking total.

Comment – *The proposed parking lot does not meet City Technical Dimensional Standards. The applicant shall provide supporting documentation as part of a formal waiver request.*

Response – The proposed parking layout has been confirmed to be functional through the use of AutoTurn. 75-degree dimensional requirements are not outlined in the Technical Manual; however, per your request a formal waiver has been requested.

Bruce Hyman, Transportation

Comment – *The concrete driveways at the overhead doors are in poor condition and are to be reconstructed allowing for a minimum 5 foot ADA-accessible pedestrian access route connecting to the adjoining sidewalks should the driveways remain in active service (requires an approved waiver for number of driveways per commercial property). Should the driveways remain, a construction detail will be required.*

Response – Please refer to the revised Site Plan. The project now proposes to reconstruct the entirety of the sidewalks along the project's Hanover and Parris St frontages, including the overhead doors. The sidewalks will be built to City and ADA standards.

Comment – *The concrete sidewalks abutting the building are only in fair condition and at a minimum will require replacement of several sections of sidewalk - strong consideration should be given to replacing the entirely of concrete sidewalk along the building frontages on Hanover and Parris Streets to create attractive and functional sidewalks commensurate with the quality of the rest of the project. Full replacement would allow the introduction of street trees (should they be considered desirable by the City Arborist).*

Response – The sidewalks abutting the building will be replaced with implementation of street trees.

Comment –*The portion of brick sidewalk along Parris Street is only in Fair+ condition and strong consideration should be given to its replacement with concrete sidewalk per the Sidewalk Material Policy. At a minimum, a portion of the sidewalk will need to be repaired to make it fully functional and ADA-compliant.*

Response – The brick sidewalk will be replaced with new concrete sidewalk that will comply with City and ADA standards.

Comment – *A sturdier bike rack system(s) is needed to meet the bicycle parking requirements of the project. Bicycle parking is required to be logically distributed at major building entries.*

Response – The stadium-style rack is proposed to remain at the rear of the property. However, a sturdier bicycle hitch will be installed at Parris and Hanover. The onsite proposed bicycle parking includes:

- 4 public bicycle spaces – Parris and Hanover
- 14 external private bicycles spaces – Lancaster St
- 18 internal private and a trailer space – Secure and enclosed bicycle room within the building.
- Total of 36 Bicycle Spaces and 1 bicycle trailer space.

Woodard & Curran, Civil Engineering

Comment – *In accordance with Section 5 of the City of Portland Technical Manual, a Level III development project is required to submit a stormwater management plan pursuant to the regulations of MaineDEP Chapter 500 Stormwater Management Rules, including conformance with the Basic, General, and Flooding Standards. The proposed project results in a net decrease in impervious area of approximately 600 feet. We offer the following comments:*

a) Basic Standard: Plans, notes, and details have been provided to address erosion and sediment control requirements, inspection and maintenance requirements, and good housekeeping practices in accordance with Appendix A, B, & C of MaineDEP Chapter 500.

b) General Standards: The Applicant has noted that there is no new impervious surface provided on the site. Portions of the existing impervious surfaces will be regraded with stormwater flows potentially directed to new locations, and this work will not qualify as redevelopment. The Applicant should evaluate the areas of redevelopment, and if the project is creating greater than 5,000 square feet of non-roof impervious redeveloped area, stormwater treatment will be required.

c) Flooding Standards: The project is not creating new impervious surface, and is not required to comply with the Flooding Standard.

Response –

a) Thank you for your review.

b) Please refer to Document U., a drainage exhibit outlining the areas of impervious non-roof redevelopment which includes impervious area that alters the flow regime. All other areas meet the MaineDEP's definition for a maintenance activity. The total area considered "redevelopment" is under the 5,000 SF threshold, thus water quality meeting the General standards has not been designed or analyzed. However, the implementation of new landscaping and two new catch basins with hoods and 3' sumps within the parking lot will increase the quality of stormwater leaving the site.

c) We are in agreement.

Comment – *The Applicant submitted letters to Portland Water District and the City of Portland Department of Public Works to request utility capacity to serve documentation for the proposed project. Response letters confirming ability to serve the proposed development and adequacy of the existing sewer service should be submitted to the City upon receipt.*

Response – We are still awaiting responses and will upload the letters from each party as soon as they are received.

Comment – *The grading to the south of the building should be clarified. The grading plan does not indicate a curbed sidewalk, however other plans indicate that a sidewalk will be maintained. Grading should be such that drainage is able to exit the patio area, but not drain towards the building.*

Response – Please refer to the revised Grading & Drainage and Site plans. The grades have been clarified and there is no longer a proposed sidewalk along the rear building face.

Comment – *The Applicant should clarify the catch basin connections within the northern parking area and identify the direction of flow to Parris and/or Hanover Street.*

Response – Please refer to the revised Grading & Drainage Plan, sheet C-30, for these clarifications. The westerly CB will connect to the separated storm drain within Parris and the easterly CB will temporarily connect to the existing outlet into the combined system. Once the Kennebec Street improvements are implemented, it is proposed to connect a 6" line into the City's new catch basin #13 as seen on C-30.

Comment – *It is our understanding that the Kennebec Street right of way improvements, including sidewalks, will be constructed by the City of Portland, and that this work will not be completed until after the 82 Hanover Street project is complete. The 82 Hanover Street project has been designed to accommodate the future improvements. The Applicant should also address the interim condition, and how the project can be constructed before the Kennebec Street work is completed.*

Response – In addition to the above response, please refer to the revised Construction Management Plan, C-03, for more information on the interim construction phase. The grades will generally be increased along the Kennebec frontage so granite curbing will be installed and backfilled with gravels (within the City's ROW) that will conform to the City's sidewalk base requirements.

Comment – *The Applicant should coordinate utility service connections from the Site with the Department of Public Works. This includes sewer service and connections from on-site catch basins to the drainage or sewer piping in the street. The City is having test pit work done now, and it may be available in the next few weeks to help inform the Applicant's design. Gerry Remsen with the Water Resources division of DPW is a resource for the Applicant. It is understood that the design may need to change based on the investigation work that the City is doing now. It is recommended that as a condition of approval, the Applicant coordinate with DPW and provide final design of sewer and stormdrain connections for their review and approval prior to issuance of a building permit.*

Response – We are awaiting input from the Department of Public Works. In the meantime, we will reach out to Gerry for any additional information he may have.

Comment – *Construction Management Plan:*

a) *It is noted that the general contractor has not yet been identified. The construction management plan will be finalized when a contractor is selected and a "Maintenance of Traffic" plan is submitted for review.*
b) *The Applicant indicates that parking will be provided for construction workers along Hanover Street in Section K. 1. of the Construction Management Plan. The City of Portland generally does not allow on-street parking for construction workers or vehicles. The Applicant should indicate a location for off-street parking.*

Response –

a) We are in agreement.
b) The Construction Management Plan has been revised to eliminate the on-street parking option. Parking will be provided on site primarily in front of the building with a secondary location at the rear.

<u>Caitlin Cameron, Design Review</u>

Comment – *A-1 Sense of Place: The increase in window openings, additional doors, canopies, and mixed-use activity will contribute to this standard to encourage sense of place, foot traffic, and neighborhood amenity. The project meets the standard regarding adaptive reuse and respecting the "patina" and age of the existing neighborhood fabric.*

Response – Thank you for your review.

Comment –*A-5 Pedestrian Environment: The design and landscaping of the sidewalk could mitigate the impact of the surface parking lot between the street and the building on Kennebec Street.*

Response – Due to the City obtaining over 2,500 square feet of the Applicant's land to improve the Kennebec Street corridor, the project is restrained. The parking lot is critical to the project and needs to remain to provide a viable project, both from a planning and business perspective. A compromise was reached with the City's Public Works Department which allowed the design intent of the Kennebec improvements to be maintained while also allowing for the minimum amount of space needed for a 5 ft wide sidewalk, row of parking, narrow one-way drive aisle, and a compact row of parking. The result is a tight site requiring two waivers for parking aisle width and percent of compact parking with no additional space. A combination of the existing conditions and redesign of Kennebec St. has produced a constrained site with no opportunity for screening. Had the land not been obtained by the city, screening and/or landscaping would have been provided in between Kennebec Street and the redevelopment of the existing parking lot.

Comment – *B-9 Streetscape Design: The landscape design is limited to the corners of the surface parking. Using landscaping, planters, or fence to screen the surface parking from the sidewalk would better meet this standard.*

Response – Please see the above response. Additionally, the revised Site Plan now proposes street trees along Hanover and Parris Streets.

Comment – *B-11 Lighting: The Technical Manual is under revision – the Bayside Medium fixture is required on those sidewalks not covered by cobrahead lighting. Spacing should be as required in the Technical Manual but in black color, LED 3000 K.*

Response – Please refer to the revised Site Plan in which Bayside Light Fixtures are proposed along Parris Street and at each Kennebec intersection. Hanover Street presently features the Bayside fixtures.

Comment – *C-6 Surface Lots: This standard requires that areas devoted to surface parking shall be screened from public rights of way with design elements such as planting, fencing, grade changes, and/or walls. A landscape border is required around all surface parking lots. Landscaped islands are also required.*

Response – Please see the above response regarding the lack of screening. Four landscaped islands have been provided that will help screen and shade the parking. Overall, this is an improvement on the existing condition.

Comment – *Principle E Comments*
Response – Please refer to the attached response letter from the Project Architect, Ryan Senatore Architecture.

Jeff Tarling, Landscaping

Comment – *In review of the proposed project tree and landscape plans I would recommend planting an additional street-tree mid way along Kennebec Street. The tree spacing between the mid-block is important as this corridor becomes more pedestrian and bike friendly with the future extension of the Bayside Trail. We have over the past several years worked with the Bayside Neighborhood Organization to insert regular tree spacing into the built environment - thus this opportunity to plant an additional tree mid block is likely a one time only opprtunity. We realize this impacts the always valuable (1) parking space but this could be transformed into a tree planter on half the space and bike / scooter parking in the other half or a stormwater rain-garden feature. The ideal spot for this tree would be where the Compact parking space arrow points to on the Landscape Plan.*

Response – Due to the parking restraint and plowing concerns, a midblock tree is not proposed. Had the Applicant retained ownership of all frontage along Kennebec Street, street trees, screening, and additional landscaping would have been provided. Unfortunately, the Kennebec redesign and existing conditions do not allow for street trees along this section of Kennebec Street unless the City wants to explore implementing street trees into the six-foot sidewalk.

Comment – *Paris & Hanover Street trees - as this new project site evolves from the old more industrial feel to neighborhood, having additional street trees similar to what Bayside Bowl has installed across the street would be ideal. A closer look to the feasibility of adding three to four trees per side is worth looking into.*

Response – Please refer to the revised Site Plan in which four street trees per side have been added to Hanover and Parris Streets in conjunction with the reconstruction of the sidewalks.

Comment – *We feel strongly that trees and landscape features are important in these types of transition industrial commercial re-purposing sites. The nearby Bayside Bowl across the street is a good example on fitting in trees and landscape helping with creating a neighborhood feel, similar ideas can be shared here as well.*

Response – Due to Kennebec realignment and ROW expansion, there is no room for a landscaping buffer along Kennebec Street. Although Bayside Bowl features screening, they are expected to lose approximately 50% of their green space along their frontage due to this realignment. The maintenance of the existing building at 82 Hanover provides an additional challenge and restraint. The site is ultimately constrained by a combination of the building and the ROW expansion.

Please let us know if you have any additional questions or comments.

Sincerely,

William H. Savage, P.E.
Principal - Project Manager
Acorn Engineering, Inc.

Samuel J. Lebel, E.I.
Design Engineer
Acorn Engineering, Inc.

RYAN SENATORE **ARCHITECTURE**

April 06, 2018

Caitlin Cameron
Urban Designer
Planning Department
City of Portland Maine
389 Congress Street
Portland, Maine 04101

Re: 82 Hanover Design Review Response

Caitlin,

Please see the attached responses to your Principle E comments as part of the design review for 82 Hanover Street.

E-6 Entrances

- As you indicate the existing conditions constrain the opportunities for a primary entrance to the building, thus the proposed common entry is on the Hanover Street elevation. We do however propose to provide primary entries to the individual tenant suites on all street sides of the building with the intent to activate all street facades

E-7 Windows

- All new windows at the street level will be transparent glass with a VT of 0.7.

E-8 Storefront

- All new glazing in Storefront doors and windows at the street level will be transparent glass with a VT of 0.7 to meet the ordinance.

207-747-5159

senatorearchitecture.com

ryan@senatorearchitecture.com

E-10 Rooftop Appurtenances

- All rooftop appurtenances will be located on the roof a minimum of 25’ from the roof edge to eliminate visibility from street level. They will also be consolidated as much as possible.

E-16 Signage

- Tenant signage will be provide by blade signs, signage on the tenant canopies has been removed, see attached revised renderings.

Sincerely,

Ryan Senatore, AIA LEED-AP

Principal

207-747-5159

senatorearchitecture.com

ryan@senatorearchitecture.com

ACORN ENGINEERING, INC.

Nell Donaldson – Senior Planner
Planning Division, City of Portland
389 Congress Street
Portland, ME 04101

May 7, 2018

Subject: Comment Response Letter II
82 Hanover St. Redevelopment – Portland, Maine

On behalf of Tom Watson & Co., LLC we are pleased to respond to the second round of comments that we've received by multiple reviewers. The comment is provided in italics followed by Acorn's response.

Nell Donaldson, Planning

Comment – *Is there any other way to deal with the transformer? In addition to the sewer easement issue, the site plan standards require screening from the ROW. This would obviously present a whole additional set of issues in this location. Could the transformer be roof-mounted? Inside the building? Underground on the front side of the building? Underground on 44 Hanover?*

Response – The ground mounted transformer is located as such due to site constraints. A subsurface transformer is not feasible due to the floodplain elevation in Bayside. A pole mounted transformer is not feasible due to the electrical loads. Additionally, roof-mounted and internal transformers are not permissible under CMP's standards. After multiple onsite meetings with CMP and our electrician the transformer has been located as close to the building as feasible. Please note that should Tom Watson acquire 44 Hanover the transformer could be relocated to this parcel where greater opportunities exist for screening.

Comment – *Ideally, at least one of the bike racks would be located at the front of the building. At the least, could one be relocated northward so that it is visible from the main entrance?*

Response – Please refer to the revised Site Plan in which the bike rack on Hanover Street has been relocated near the intersection of the internal sidewalk and the public sidewalk

Comment – *Per our earlier conversations, a 10' pedestrian easement should be shown through the Lancaster Street ROW.*

Response – We understand that per discussions with you, 5' is to be on the 82 Hanover site and 5' is to be on the 44 Hanover site. Please refer to the revised Site Plan in which a 10' pedestrian/bicycle easement is shown along the shared property line.

Comment – *DPW is suggesting a beveled curbing treatment at the OH doors, with graded*

pavement to meet the bottom edge of the bevel. See example here on Free Street:

Response – Please refer to the revised Site Plan as well as Sheet C-40 where we have included a detail of the proposed beveled granite curbing.

Comment – *The curb reveal on the Kennebec Street frontage is 6" along the center of the middle of the parking area. We are looking into the encroachment question. The Urban Designer continues to have comments on screening on this frontage as well. Is there any creative way to address both of these concerns (and the standards that they relate to)? A low architectural fence? A living fence?*

Response – This is the only spot where there is a 6" reveal internally. On either side of this point, the reveal will transition back to a 7" reveal. The reason for this design was to give an extra inch of pitch to the "high point" in order to drain water. The site faces challenges in that it's a long, linear parking lot subject the City's proposed Kennebec Street grades which are relatively flat.

Please refer to the updated landscape plan (C-10) that now includes a green screen. The green screen has been designed to incorporate English Ivy into the fence to buffer the sidewalk from the existing redeveloped parking lot. This green screen has been successfully used on other projects including 667 Congress St (Joe's Variety). On the existing parking lot side the green screen has been designed with a vehicle bumper guard to prevent vehicles from overhanging the proposed sidewalk. A typical interstate guardrail is 15" in depth, the proposed low-profile parking guardrail will be 6" in depth. Please note that the green screen will require a license from the City for portions of the fence that overhang the proposed right-of-way.

Comment – *Please confirm the location of the 'private' bike rack. The note is misplaced.*

Response – Please refer to the revised Site Plan for this information.

Comment – *Please provide any additional ability to serve letters.*

Response – We are still waiting on this information and will submit upon receipt.

Comment – *Does existing light fixture at Lancaster Street entrance remain? Can this be removed?*

Response – The existing light fixture and utility pole on Lancaster will be removed.

Comment – *There may be additional comments on the construction management plan, pending further review. As of now, DPW is asking that the plan for the interim condition along the Kennebec Street frontage be revised as follows: "any disturbance within the City ROW shall be restored to existing conditions and/or loam and seeded. The gravel base material should extend into the ROW, on the back side of the proposed site curbing, at least a couple of feet so contractors can avoid disturbing the curb during the Kennebec Street improvements."*

Response – Please refer to the revised Construction Management Plan which now includes this note.

Comment – *See existing conditions plan markup from the city's surveyor.*

Response – Please refer to the revised survey which has incorporated the City's requested notes.

<u>Caitlin Cameron, Design Review</u>

Comment – *The design and landscaping of the sidewalk could mitigate the impact of the surface parking lot between the street and the building on Kennebec Street. At the very least, wheel stops should be provided.*

Comment – *B-9 Streetscape Design: The landscape design is limited to the corners of the surface parking. Using landscaping, planters, or fence to screen the surface parking from the sidewalk would better meet this standard.*

Comment – *Principle C Parking, Loading, and Service Areas – Parking, loading and service areas shall be designed and located so as to present an attractive façade to neighboring use, to minimize their visual presence in the neighborhood, and to minimize the impact along pedestrian oriented streets and residential areas. C-6 Surface Lots: This standard requires that areas devoted to surface parking shall be screened from public rights of way with design elements such as planting, fencing, grade changes, and/or walls. A landscape border is required around all surface parking lots. Landscaped islands are also required.*

Response – Please refer to the updated landscape plan (C-10) that now includes a green screen. The green screen has been designed to incorporate English Ivy into the fence to buffer the sidewalk from the existing redeveloped parking lot. This green screen has been successfully used on other projects including 667 Congress St (Joe's Variety). On the existing parking lot side the green screen has been designed with a vehicle bumper guard to prevent vehicles from overhanging the proposed sidewalk. A typical interstate guardrail is 15" in depth, the proposed low-profile parking guardrail will be 6" in depth. Please note that the green screen will require a license from the City for portions of the fence that overhang the proposed right-of-way.

Comment – *B-11 Lighting: The Technical Manual is under revision – the Bayside Medium fixture is required on those sidewalks not covered by cobrahead lighting. Spacing is shown per Technical Manual and staff direction but lights should be in black color, LED 3000 K – Sheet C41 detail for Bayside Medium light should be revised to reflect black color, LED 3000 K.*

Response – Please refer to the updated detail on Sheet C-41.

Comment – *Principle E Architectural Design*

Response – Please refer to the attached responses from the project Architect, Ryan Senatore Architecture.

Robert Thompson, Fire

Comment – *The Fire Department requires Hanover Street be limited to parking on one side of the street from Lancaster Street to Kennebec Street.*

Response – We are no longer showing on-street parking on both sides of Hanover Street.

Comment – *There is adequate water supply in the area for Fire Department operations.*

Response – Thank you for your review.

Comment – *With the comments listed above, there is sufficient access to the building for emergency aparatus.*

Response – Thank you for your review.

Comment – *If the developer is considering changing the building address to a Kennebec Street address, they should request that as soon as possible so it can be considered by the Fire Department, Public Safety Communications Center, and the City of Portland 9-1-1 Addressing Officer.*

Response – We will relay this information to the Applicant. At this time, the address is not anticipated to be changed.

Comment – *The Fire Department will allow parking on both sides of Parris Street from Lancaster Street to Kennebec Street*

Response – We will maintain on-street parking on both sides of Parris Street.

Woodard & Curran, Civil Engineering

Comment – *The Applicant submitted letters to Portland Water District and the City of Portland Department of Public Works to request utility capacity to serve documentation for the proposed project. Applicant has noted that responses are pending and will be provided upon receipt.*

Response – We are still waiting on a response the from the District and will upload upon receipt.

Comment – *It is noted that stormdrain pipes are not permitted to be connected into City of Portland catch basins per the City of Portland Technical Manual, Section 2.7.8. A connection is shown from the parking lot to a proposed catch basin at the corner of Kennebec and Hanover Street. We understand that the Applicant is coordinating with the Department of Public Works with regards to their proposed sewer and stormdrain connections. A final plan to be reviewed by the Department of Public Works should be made a condition of approval.*

Response – We are proposing the connection into CB-13 as seen to avoid connecting to the underdrain. From both a maintenance and soil disturbance standpoint it is more desirable to core and inlet into the catch basin rather than connect into the perforated underdrain. We will send the final Utility and Grading & Drainage plans to Public Works for review.

Please let us know if you have any additional questions or comments.

Sincerely,

William H. Savage, P.E.
Principal - Project Manager
Acorn Engineering, Inc.

Samuel J. Lebel, E.I.
Design Engineer
Acorn Engineering, Inc.

82 HANOVER STREET REDEVELOPMENT

TOM WATSON & CO., LLC
PORTLAND, MAINE

LEGEND

EXISTING		PROPOSED
REFER TO THE EXISTING CONDITIONS PLAN FOR ADDITIONAL INFORMATION	UNDERDRAIN	
	GREEN SPACE	
	UTILITY PAVEMENT CUTS	
	STRIPING	
	SEDIMENTATION BARRIER	
	EDGE OF EX. PAVEMENT	
	CURB	
	SIGN	
	LAMP OR LIGHT POLE	
	UTILITY POLE	
	WATER VALVE	
	GAS VALVE	
	WATER SHUTOFF	
	FIRE HYDRANT	
	SEWER MANHOLE	
	CATCH BASIN	
	DRAIN MANHOLE	
	MANHOLE	
E — E — TV — TV —	UNDERGROUND ELECTRIC/TELEPHONE/CABLE	
W — W —	UNDERGROUND WATER LINE	1"W — 1"W
64	MINOR CONTOURS (1 FT)	64
65	MAJOR CONTOURS (5 FT)	65
G — G —	GAS LINE	GAS — GAS
D — D —	STORM DRAIN LINE	D — D
S — S —	SEWER LINE	S — S
	EXISTING/PROPOSED BUILDING	
OHE/T/C	OVERHEAD ELECTRICAL/TELEPHONE/CABLE	
	PROPERTY LINE	
	SETBACKS	

INDEX

C-01 COVER SHEET & LEGEND
C-02 GENERAL NOTES
EX EXISTING CONDITIONS PLAN – BY TITCOMB ASSOCIATES
C-03 CONSTRUCTION MANAGEMENT & EROSION CONTROL PLAN
C-10 SITE & LANDSCAPE PLAN
C-20 UTILITY PLAN
C-30 GRADING & DRAINAGE PLAN
C-40 SITE DETAILS – 1
C-41 SITE DETAILS – 2
C-42 LANDSCAPING DETAILS
C-43 UTILITY DETAILS – 1
C-44 UTILITY DETAILS – 2
C-45 DRAINAGE DETAILS
C-46 EROSION & SEDIMENTATION CONTROL DETAILS

UTILITIES

SEWER:

DEPARTMENT OF PUBLIC WORKS (DPW)
55 PORTLAND STREET
PORTLAND, MAINE 04101
CONTACT: KEITH GRAY, P.E.
(207) 874–8834

WATER:

PORTLAND WATER DISTRICT (PWD)
225 DOUGLASS STREET
PO BOX 3553
PORTLAND, MAINE 04104
ATTN: MEANS DIVISION
(207) 774–5961

ELECTRIC:

CENTRAL MAINE POWER COMPANY (CMP)
162 CANCO ROAD
PORTLAND, MAINE 04103
CONTACT: PAUL DUPERRE
(207) 828–2882

TELEPHONE:

CONSOLIDATED COMMUNICATIONS
(FORMERLY FAIRPOINT)
45 FOREST AVENUE
PORTLAND, MAINE 04101
CONTACT: PAT MORRISON
(207) 745–9363

CABLE:

SPECTRUM/CHARTER COMMUNICATIONS
(FORMERLY TIME WARNER CABLE)
118 JOHNSON ROAD
PORTLAND, MAINE 04102
CONTACT: MARK PELLETIER
(877) 546–0962

NATURAL GAS:

UNITIL SERVICE CORP.
1075 FOREST AVENUE
PORTLAND, ME 04103
CONTACT: SCOTT CARPENTER
(207) 541–2543

PROJECT TEAM

DEVELOPER:

TOM WATSON & CO., LLC
PORTLAND, MAINE
CONTACT: TOM WATSON
(207) 252–0358

ARCHITECT:

RYAN SENATORE ARCHITECTURE
PORTLAND, MAINE
CONTACT: RYAN SENATORE, A.I.A.
(207) 650–6414

SURVEYOR:

TITCOMB ASSOCIATES
FALMOUTH, MAINE
CONTACT: REX CROTEAU, P.L.S.
(207) 797–9199

STRUCTURAL ENGINEER:

STRUCTURAL INTEGRITY CONSULTING ENGINEERS, INC.
PORTLAND, MAINE
CONTACT: AARON JONES, P.E.
(207) 774–4614

TRAFFIC CONSULTANTS:

TRAFFIC SOLUTIONS
PORTLAND, MAINE
CONTACT: BILL BRAY, P.E.
(207) 400–6890

CUSHMAN TRANSPORTATION CONSULTING, LLC
PORTLAND, MAINE
CONTACT: SARAH CUSHMAN
(207) 200–1910

ABBREVIATIONS

PARTIAL LIST OF ABBREVIATIONS AND THEIR CORRESPONDING MEANING. PLEASE CONTACT THE ENGINEER FOR ANY CLARIFICATION

APPROX.	APPROXIMATE
BC	BOTTOM OF CURB
BMP	BEST MANAGEMENT PRACTICE
BOT.	BOTTOM
CB	CATCH BASIN
CF	CUBIC FOOT
CIP	CAST IN PLACE
CM	CONSTRUCTION MANAGER
CMP	CENTRAL MAINE POWER
CONC.	CONCRETE
CY	CUBIC YARD
DIP	DUCTILE IRON PIPE
DIA.	DIAMETER
DIM.	DIMENSION
EA.	EACH
ELEC.	ELECTRICAL
ELEV.	ELEVATION
EQUIV.	EQUIVALENT
EST.	ESTIMATE
EX.	EXISTING
FFE	FINISH FLOOR ELEVATION
FT.	FEET
GAL.	GALVANIZED
ID	INNER DIAMETER
IN.	INCH
INV.	INVERT
L	LENGTH
MAX.	MAXIMUM
MDOT	MAINE DEPARTMENT OF TRANSPORTATION
MFG.	MANUFACTURED
MH	MANHOLE
MIN.	MINIMUM
O.C.	ON CENTER
OD	OUTSIDE DIAMETER
OHE/T/C	OVERHEAD ELECTRIC/TELEPHONE/CABLE
PC	PRECAST
PE	PROFESSIONAL ENGINEER
PL	PROPERTY LINE
PLS	PROFESSIONAL LAND SURVEYOR
PROP.	PROPOSED
PSI	POUNDS PER SQUARE INCH
PVC	POLYVINYL CHLORIDE
R	RADIUS
RD	ROOF DRAIN
RET.	RETAINING
ROW	RIGHT OF WAY
S	SLOPE
SD	STORM DRAIN
SDR	STANDARD DIMENSION RATIO
SF	SQUARE FEET
SMH	SEWER MANHOLE
SPEC.	SPECIFICATION
TC	TOP OF CURB
TW	TOP OF WALL
TWC	TIME WARNER CABLE/CHARTER COMM.
TYP.	TYPICAL
UD	UNDERDRAIN
UGE	UNDERGROUND ELECTRIC

CALL BEFORE YOU DIG
1–888–DIG–SAFE
1–888–344–7233

PRELIMINARY
NOT ISSUED FOR
CONSTRUCTION

ISSUED FOR	BY	DATE
CITY APP.	WHS	2/26/18
COMMENT RESPONSE	WHS	4/9/18

DRAWING NAME: COVER SHEET & LEGEND

PROJECT NAME: 82 HANOVER STREET REDEVELOPMENT

CLIENT: TOM WATSON & CO., LLC
PORTLAND, ME

ACORN ENGINEERING, INC.

THIS PLAN SHALL NOT BE MODIFIED WITHOUT WRITTEN PERMISSION FROM ACORN ENGINEERING, INC. ANY MODIFICATIONS MADE WITHOUT WRITTEN PERMISSION OR OTHERWISE, SHALL BE AT THE USER'S SOLE RISK AND WITHOUT LIABILITY TO ACORN ENGINEERING, INC.

ACORN ENGINEERING, INC.
158 DANFORTH STREET, PORTLAND, MAINE 04102
(207) 775–2655

FILE:	1093_CIVIL
JN:	1093
SCALE:	NTS
DESIGNED BY:	WHS
DRAWN BY:	ADG
CHECKED BY:	WHS

STATE OF MAINE
WILLIAM H. SAVAGE
No. 11410
4-9-18
LICENSED
PROFESSIONAL ENGINEER

DRAWING NO.
C-01

GENERAL NOTES:

1. THE CONTRACTOR SHALL CALL THE APPROPRIATE UTILITY COMPANIES AND DIG SAFE AT LEAST 72 HOURS PRIOR TO ANY EXCAVATION TO REQUEST EXACT FIELD LOCATION FOR UTILITIES. OTHERWISE IT SHALL BE THE CONTRACTOR'S RESPONSIBILITY TO FIELD VERIFY THE LOCATION OF UNDERGROUND UTILITIES AND LOCATE ANY POTENTIAL CONFLICTS WITH THE APPROVED PLANS PRIOR TO CONSTRUCTION.
2. THE CONTRACTOR IS RESPONSIBLE FOR MAINTENANCE OF ALL EROSION CONTROL MEASURES SHOWN ON THE PLAN. IF DEEMED NECESSARY BY THE OWNER OR OWNER'S REPRESENTATIVE, ADDITIONAL EROSION CONTROL MEASURES SHALL BE INSTALLED AT NO ADDITIONAL COST TO THE OWNER.
3. THE CONTRACTOR SHALL PREPARE THEIR OWN MATERIAL SCHEDULE BASED ON THE PLANS AND FIELD VERIFICATION BY THE CONTRACTOR. ALL MATERIAL SCHEDULES SHOWN WITHIN THE PLAN SET ARE FOR GENERAL INFORMATION ONLY.
4. ALL CONSTRUCTION METHODS, TESTING AND MATERIALS SHALL CONFORM TO THE MAINE DEPARTMENT OF TRANSPORTATION SPECIFICATIONS, THE CITY OF PORTLAND AND SERVICING UTILITY REQUIREMENTS, IF ANY. IN CASES WHERE THESE CONFLICT THE MOST STRINGENT SPECIFICATION SHALL APPLY AT NO ADDITIONAL COST TO THE OWNER.
5. THE SITE CONTRACTOR SHALL MAINTAIN A SET OF PAPER AND CAD DRAWINGS WHICH SHALL RECORD THE ACTUAL LOCATION, DIMENSIONS, ELEVATIONS, MATERIALS OF THEIR WORK, INDICATING THEREON ALL VARIATIONS FROM THE CONTRACT DRAWINGS. THE CONTRACTOR SHALL PROVIDE THE OWNER WITH ONE COMPLETE SET OF REPRODUCIBLE RECORD DRAWINGS, IN AUTOCAD FORMAT AND PAPER, STAMPED ''AS–BUILT''. IF AUTOCAD NOT AVAILABLE EXCLUDE FROM BID IN WRITING.
6. THE CONTRACTOR WILL REMAIN SOLELY AND COMPLETELY RESPONSIBLE FOR ENFORCEMENT OF AND COMPLIANCE WITH 1) ALL CONTRACT PLANS AND SPECIFICATIONS, 2) APPLICABLE INTERNATIONAL BUILDING CODE REQUIREMENTS, AND 3) ALL SITE WORKING CONDITIONS AND SAFETY REQUIREMENTS, DAY AND NIGHT, FOR BOTH PERSONS AND PROPERTY, IN EACH CASE BOTH BY THE CONTRACTOR AND ITS SUBCONTRACTORS. THESE INCLUDE ALL OSHA, NIOSH, U.S. EPA AND ANY OTHER APPLICABLE GOVERNMENTAL REGULATIONS.
7. EXISTING CONDITIONS, BOUNDARY SURVEY, AND TOPOGRAPHY FROM THE PLAN TITLED EXISTING CONDITIONS SURVEY BY TITCOMB ASSOCIATES FOR 52 & 82 HANOVER STREET, DATED JANUARY 25, 2018.
8. THE CONTRACTOR IS RESPONSIBLE FOR MAINTAINING ACCESS TO THE SITE AND ALL ADJACENT PROPERTIES AT ALL TIMES. THE CONTRACTOR SHALL BE RESPONSIBLE FOR ALL TEMPORARY MARKINGS, SIGNAGE AND INCIDENTALS TO MAINTAIN A SAFE VEHICLE AND PEDESTRIAN ACCESS THOUGH THE LIFE OF THE PROJECT. THE CONTRACTOR SHALL NOTIFY THE PORTLAND PUBLIC SAFETY DIVISION ROUTINELY REGARDING TEMPORARY IMPACTS OR CHANGES TO SITE ACCESS CONDITIONS.
9. THE CONTRACTOR SHALL REVIEW ACORN'S CONSTRUCTION MANAGEMENT PLAN. CONTRACTOR SHALL REMAIN RESPONSIBLE FOR ANTICIPATED PROJECT SCHEDULE AND CLOSURES. CONSTRUCTION MANAGEMENT, MEANS AND METHODS, TRAFFIC CONTROL, ETC. SHALL BE THE SOLE RESPONSIBILITY OF THE CONTRACTOR.
10. CONTRACTOR TO DETERMINE SOIL CLASSIFICATION INDEPENDENTLY FOR TRENCH, SHORING, AND OTHER SIMILAR CONSTRUCTION MEANS AND METHODS APPLICATIONS.
11. NO HOLES, TRENCHES, OR STRUCTURES SHALL BE LEFT OPEN OR UNATTENDED OVERNIGHT IN ANY AREA ACCESSIBLE TO THE PUBLIC OR WITHIN THE PUBLIC RIGHT–OF–WAY.
12. THE CONTRACTOR SHALL CONDUCT A PRE–CONSTRUCTION SURVEY OF ADJACENT PROPERTIES INTERIOR SUBGRADE AND ABOVE GRADE ACCESSIBLE WALLS, CEILINGS, FLOORS, ROOF AND VISIBLE EXTERIOR AS VIEWED FROM THE GRADE LEVEL. DOCUMENT WITH PICTURES AT A MINIMUM.
13. THE CONTRACTOR SHALL SURVEY ROCK SURFACE PRIOR TO EXCAVATION AND DEVELOP VOLUME CALCULATIONS TO SHARE WITH ACORN, IF ANY.

CIVIL SITE NOTES:

1. THE CONTRACTOR SHALL SUBMIT IN WRITING ANY REQUESTS TO MODIFY THE CONTRACT DOCUMENTS.
2. ALL SHOP AND ERECTION DRAWINGS SHALL BE CHECKED AND STAMPED BY THE GENERAL CONTRACTOR PRIOR TO SUBMISSION FOR ENGINEER'S REVIEW. ANY UNCHECKED OR NON–STAMPED SUBMITTALS WILL BE RETURNED WITHOUT REVIEW.
3. CONTRACTOR SHALL THOROUGHLY INSPECT AND SURVEY EXISTING STRUCTURES AND SITE TO VERIFY CONDITIONS THAT AFFECT THE WORK SHOWN ON THE DRAWINGS. CONTRACTOR TO NOTIFY THE ENGINEER OF ANY DISCREPANCIES PRIOR TO PROCEEDING.
4. DETAILS SHOWN APPLY TO ALL SIMILAR CONDITIONS UNLESS OTHERWISE INDICATED.
5. ALTHOUGH ALL DUE DILIGENCE HAS BEEN APPLIED TO MAKE THE DRAWINGS AS COMPLETE AS POSSIBLE, NOT ALL DETAILS ARE ILLUSTRATED, NOR IS EVERY EXCEPTION CONDITION ADDRESSED WITHIN THE CONTRACT DOCUMENTS.
6. ALL PROPRIETARY CONNECTIONS SHALL BE INSTALLED IN ACCORDANCE WITH THE MANUFACTURER'S RECOMMENDATIONS.
7. THE GENERAL CONTRACTOR IS RESPONSIBLE FOR THE COORDINATION OF ALL WORK, INCLUDING DIMENSION AND LAYOUT VERIFICATION, MATERIALS COORDINATION, SHOP DRAWING REVIEW, AND THE WORK OF ANY SUBCONTRACTORS.
8. UNLESS OTHERWISE SPECIFICALLY INDICATED, THE DRAWINGS DO NOT DESCRIBE OR DIRECT MEANS OR METHODS OF CONSTRUCTION.
9. THE CONTRACTOR, IN THE PROPER SEQUENCE, SHALL PERFORM OR SUPERVISE ALL WORK NECESSARY TO ACHIEVE THE FINAL COMPLETED STRUCTURE, AND TO PROTECT THE STRUCTURE, WORKMEN, AND OTHERS DURING THE CONSTRUCTION. SUCH WORK SHALL INCLUDE, BUT NOT BE LIMITED TO, BRACING, SHORING FOR CONSTRUCTION EQUIPMENT, SHORING FOR EXCAVATION, FORMWORK, SCAFFOLDING, SAFETY DEVICES AND PROGRAMS OF ALL KINDS, SUPPORT AND BRACING FOR CRANES AND OTHER ERECTION EQUIPMENT.
10. DO NOT BACKFILL AGAINST RETAINING WALLS UNTIL SUPPORTING SLABS AND FLOOR FRAMING ARE IN PLACE AND SECURELY ANCHORED, UNLESS ADEQUATE BRACING IS PROVIDED.
11. TEMPORARY BRACING SHALL REMAIN IN PLACE UNTIL ALL FLOORS, WALLS, ROOFS AND OTHER SUPPORTING ELEMENTS ARE IN PLACE.
12. ALL PAVEMENT JOINTS SHALL BE SAWCUT AND APPLIED WITH TACK COAT PRIOR TO PAVING TO PROVIDE A DURABLE AND UNIFORM JOINT.
13. THE ENGINEER BEARS NO RESPONSIBILITY FOR THE ABOVE ITEMS, AND OBSERVATION VISITS TO THE SITE DO NOT IN ANY WAY INCLUDE INSPECTION OF THEM.

SPECIAL INSPECTION NOTES:

1. ALL SITE SOILS–RELATED WORK AND FOOTING EXCAVATIONS PRIOR TO PLACING FORMS, AS WELL AS SITE DRAINAGE, SHALL BE REVIEWED BY THE PROJECT ENGINEER.
2. NORMAL REVIEWS BY LOCAL BUILDING DEPARTMENT.
3. NOTIFY 48 HOURS PRIOR TO REQUIRED REVIEW.
4. REQUIRED SPECIAL INSPECTIONS PER I.B.C. SECTION 1705.6 BY AN APPROVED SPECIAL INSPECTOR RETAINED BY OWNER. CONTRACTOR TO COORDINATE SPECIAL INSPECTIONS.
5. SPECIAL INSPECTOR SHALL BE A QUALIFIED PERSON WHO SHALL DEMONSTRATE COMPETENCE, TO THE SATISFACTION OF THE BUILDING OFFICIAL, FOR INSPECTION OF THE PARTICULAR TYPE OF CONSTRUCTION OR OPERATION REQUIRING SPECIAL INSPECTION.
6. DUTIES AND RESPONSIBILITIES OF THE SPECIAL INSPECTOR SHALL BE TO OBSERVE AND/OR TEST THE WORK ASSIGNED AND OUTLINE ABOVE FOR CONFORMANCE WITH THE CONTRACT DOCUMENTS, ALL DISCREPANCIES SHALL BE BROUGHT TO THE IMMEDIATE ATTENTION OF THE CONTRACTOR FOR CORRECTION.
7. THE SPECIAL INSPECTOR SHALL FURNISH REGULAR REPORTS TO THE BUILDING OFFICIAL, THE ARCHITECT AND ENGINEER OF RECORD, AND OTHER DESIGNATED PERSONS. PROGRESS REPORTS FOR CONTINUOUS INSPECTION SHALL BE FURNISHED WEEKLY. INDIVIDUAL REPORTS OF PERIODIC INSPECTIONS SHALL BE FURNISHED WITHIN ONE WEEK OF INSPECTION DATES. THE REPORTS SHALL NOTE UNCORRECTED DEFICIENCIES, AND NET CHANGES TO THE APPROVED CONSTRUCTION DOCUMENTS AUTHORIZED BY THE ENGINEER OF RECORD.
8. THE SPECIAL INSPECTOR SHALL SUBMIT A FINAL SIGNED REPORT WITHIN TEN DAYS OF THE FINAL INSPECTION STATING WHETHER THE WORK REQUIRING A SPECIAL INSPECTION WAS, TO THE BEST OF THE INSPECTOR'S KNOWLEDGE AND BELIEF, IN CONFORMANCE WITH THE APPROVED CONSTRUCTION DOCUMENTS AND THE APPLICABLE WORKMANSHIP PROVISIONS OF THE INTERNATIONAL BUILDING CODE. WORK NOT IN COMPLIANCE SHALL BE NOTED IN THE REPORT.
9. SPECIAL INSPECTION FIRM SHALL BE EMPLOYED BY TOM WATSON &CO., LLC AND COORDINATED BY THE CONTRACTOR.

LAYOUT NOTES:

1. MONUMENTS DELINEATING PROPERTY LINES OR RIGHT OF WAYS SHALL NOT BE DISTURBED DURING CONSTRUCTION OPERATIONS. IN THE CASE A MONUMENT IS DISTURBED, AT THE CONTRACTOR'S EXPENSE, THE MONUMENT SHALL BE RESET TO ITS ORIGINAL LOCATION AND ELEVATION BY A REGISTERED LAND SURVEYOR.
2. ALL DIMENSIONS ON THE FOLLOWING SHEETS TAKE PRECEDENT OVER SCALED DIMENSIONS. EACH DRAWING WITH A BAR SCALE MEANS THAT THE DRAWING/DETAIL HAS BEEN SCALED AS ACCURATELY AS POSSIBLE, AND THE BAR SCALE IS FOR GENERAL REFERENCE ONLY. IF NO BAR SCALE IS PRESENT, THEN THERE IS NO SCALE TO THAT DRAWING/DETAIL. AT NO TIME SHOULD DRAWINGS BE SCALED FROM. ANY DISCREPANCIES BETWEEN DRAWINGS, DETAILS, SPECIFICATIONS AND THE FIELD CONDITION SHALL BE IMMEDIATELY REPORTED TO THE CIVIL ENGINEER FOR FURTHER DIRECTIONS BEFORE ANY ADDITIONAL WORK PROCEEDS.
3. SIGNAGE, STRIPING, AND PAVEMENT MARKINGS SHALL BE IN ACCORDANCE WITH THE MANUAL ON UNIFORM TRAFFIC CONTROL DEVICES (MUTCD).
4. ALL TRAFFIC CONTROL SIGNS INDICATED ON THE SITE LAYOUT PLAN ARE TO MEET ALL REQUIREMENTS & CONDITIONS OF THE CITY OF PORTLAND, MAINE DEPARTMENT OF TRANSPORTATION AND THE MANUAL ON UNIFORM TRAFFIC CONTROL DEVICES, LATEST EDITION.
5. THE CONTRACTOR SHALL OBTAIN THE SERVICES OF A LICENSED PROFESSIONAL LAND SURVEYOR TO PROVIDE A MINIMUM OF TWO TEMPORARY BENCHMARKS WITHIN THE SITE.
6. CONTRACTOR TO ENSURE THAT DRIVEWAYS AND MAILBOXES ADJACENT TO THE PROJECT REMAIN FUNCTIONAL AND IN USE AT ALL TIMES.

PERMITTING NOTES

1. THIS PROJECT IS SUBJECT TO THE TERMS AND CONDITIONS OF SITE PLAN – LEVEL III PERMIT FROM THE CITY OF PORTLAND.
2. THE CONTRACTOR SHALL REVIEW THE ABOVE REFERENCED PERMITS PRIOR TO SUBMITTING A BID FOR THIS PROJECT, AND INCLUDE COSTS AS NECESSARY TO COMPLY WITH THE CONDITIONS OF THESE PERMITS.
3. ALL WORK WITHIN THE PUBLIC RIGHT–OF–WAY REQUIRES A STREET OPENING PERMIT FROM THE CITY OF PORTLAND. ADDITIONALLY, COORDINATE WITH THE DEPARTMENT OF PUBLIC WORKS.

GRADING AND DRAINAGE NOTES:

1. TOPSOIL STRIPPED FROM THE SITE THAT IS SUITABLE FOR REUSE AS LOAM SHALL BE STOCKPILED WITHIN THE PROPOSED LIMIT OF WORK AREA. THE CONTRACTOR SHALL NOT ASSUME THAT ANY LOAM WILL BE ACCEPTABLE FOR REUSE WITH THEIR ESTIMATE.
2. THE CONTRACTOR SHALL ANTICIPATE THAT GROUNDWATER WILL BE ENCOUNTERED DURING CONSTRUCTION AND SHALL INCLUDE SUFFICIENT COSTS WITHIN THEIR BID TO PROVIDE DEWATERING AS NECESSARY; NO SEPARATE PAYMENT SHALL BE MADE TO THE CONTRACTOR FOR DEWATERING.
3. THE OWNER SHALL BE RESPONSIBLE FOR OBTAINING ANY EASEMENT OR TEMPORARY CONSTRUCTION RIGHTS AS NECESSARY BY PRIVATE ADJACENT LAND OWNERS. THE CONTRACTOR SHALL NOT DISTURB ANY SOIL BEYOND THE PROPERTY LINE WITHOUT NOTIFYING AND OBTAINING SUCH EASEMENT OR TEMPORARY CONSTRUCTION RIGHT FROM THE OWNER. PRIOR TO THE CONTRACTOR PRICING THE WORK THE CONTRACTOR SHALL REQUEST PROOF OF SUCH EASEMENT OR TEMPORARY RIGHTS. SHOULD EASEMENTS OR TEMPORARY RIGHTS NOT BE AVAILABLE THE CONTRACTOR SHALL INCLUDE COST FOR BRACING AND SHORING AS NECESSARY.
4. THE CONTRACTOR SHALL PROVIDE A FINISH PAVEMENT SURFACE FREE OF LOW SPOTS AND PONDING AREAS. THE MINIMUM SLOPE SHALL MEET OR EXCEED 0.5% IN ALL CASES. ALL SLOPES SHALL BE AWAY FROM BUILDINGS AND TOP OF PAVEMENT SHALL BE AT OR BELOW EXISTING FINISH FLOOR ELEVATIONS.
5. NO ADDITIONAL PAYMENT FOR UNSUITABLE MATERIALS.
6. ALL STORM DRAIN PIPE SHALL BE SMOOTH BORE INTERIOR PROVIDING A MANNINGS ROUGHNESS COEFFICIENT OF N=0.012 OR LESS.
7. ADJUST ALL MANHOLES, CATCH BASINS, CURB BOXES, ETC. WITHIN LIMITS OF WORK TO FINISH GRADE.
8. NATIVE SOILS. IT IS THE CONTRACTOR'S RESPONSIBILITY TO LIMIT THE DISTURBANCE TO SUBGRADE SOILS. SHOULD THE SUBGRADE BECOME YIELDING OR DIFFICULT TO WORK, DISTURBED AREAS SHALL BE EXCAVATED AND BACKFILLED WITH COMPACTED SELECT FILL OR CRUSHED STONE AT NO ADDITIONAL EXPENSE TO THE OWNER. ALL SUBGRADE PREPARATION IS SUBJECT TO THE RECOMMENDATIONS OF THE PROJECT ENGINEER.

EROSION CONTROL NOTES:

1. ALL ROUTINE MAINTENANCE ACTIVITIES SHALL BE CONDUCTED IN SUCH A WAY TO LIMIT THE AMOUNT OF DISTURBED AREA AT ONE TIME TO THE EXTENT PRACTICABLE.
2. PRIOR TO THE START OF ANY CLEARING/LAND DISTURBING ACTIVITIES, THE CONTRACTOR SHALL INSTALL APPLICABLE EROSION CONTROL DEVICES SUCH AS PERIMETER SILT FENCE, AND OTHER APPLICABLE MEASURES. IN THE EVENT THE CONTRACTOR IS NOT SURE A EROSION CONTROL MEASURE SHOULD BE IMPLEMENTED, THE CONTRACTOR SHALL CONTACT THE ENGINEER OF RECORD TO CONFIRM IMPLEMENTATION OF ANY EROSION CONTROL DEVICES.
3. ALL GROUND AREAS GRADED FOR CONSTRUCTION SHALL BE GRADED, LOAMED, SEEDED AND MULCH SHALL BE APPLIED AS SOON AS POSSIBLE WITHIN 7 DAYS FOLLOWING THE COMPLETION OF ANY SOIL DISTURBANCE, AND PRIOR TO ANY STORM EVENT.
4. EROSION AND SEDIMENTATION CONTROL MEASURES SHALL SHALL BE INSTALLED TO THE SATISFACTION OF THE CITY. THE CONTRACTOR SHALL REFERENCE THE APPROVED EROSION AND SEDIMENTATION CONTROL REPORT FOR TEMPORARY AND PERMANENT EROSION AND SEDIMENTATION CONTROL DEVICES IN ADDITION TO THE PLAN SET. THE CONTRACTOR SHALL ALSO REFER TO THE MAINE D.E.P.'S PERMIT CONDITIONS, FINDINGS OF FACT AND ORDER (IF ANY), AND THE CURRENT MAINE EROSION AND SEDIMENT CONTROL BMP MANUAL FOR ADDITIONAL INFORMATION.
5. PRIOR TO PAVING, THE CONTRACTOR SHALL REMOVE ALL SEDIMENT FROM STORM DRAINS, CATCH BASINS, AND APPURTENANCES.
6. REFER TO THE EROSION CONTROL DETAILS & NOTES FOR ADDITIONAL INFORMATION.

UTILITY NOTES:

1. THE CONTRACTOR IS SPECIFICALLY CAUTIONED THAT THE LOCATION AND ELEVATION OF THE EXISTING UTILITIES AS SHOWN ON THESE PLANS IS BASED UPON RECORDS OF VARIOUS UTILITY COMPANIES AND, WHERE POSSIBLE, MEASUREMENTS TAKEN IN THE FIELD. THIS INFORMATION IS NOT TO BE RELIED UPON AS BEING EXACT OR COMPLETE. IT SHALL BE THE RESPONSIBILITY OF THE CONTRACTOR TO TEST PIT TO DETERMINE THE EXACT LOCATION AND ELEVATION OF UTILITIES TO COORDINATE WITH THE PROPOSED CONNECTIONS OR CROSSING. ANY DISCREPANCIES SHALL BE IMMEDIATELY REPORTED TO THE CIVIL ENGINEER FOR FURTHER DIRECTIONS BEFORE ANY ADDITIONAL WORK PROCEED.
2. CONTRACTOR SHALL, AT NO ADDITIONAL COST TO THE OWNER, CONDUCT EXPLORATORY EXCAVATIONS AT LOCATIONS WHERE PROPOSED EXCAVATION WILL INTERSECT WITH EXISTING UTILITIES, PRIOR TO THE ORDERING OF STRUCTURES.
3. CONTRACTOR TO PROVIDE 5' OF COVER FROM TOP OF PIPE TO FINISH GRADE FOR WATER MAINS.
4. THRUST BLOCKS SHALL BE USED FOR THRUST RESTRAIN ON WATER MAINS. DETAIL AND LIMITS FOR THRUST BLOCKS ARE SHOWN ON SHEET C–42.
5. WATER INFRASTRUCTURE SHALL BE TESTED IN ACCORDANCE WITH THE PORTLAND WATER DISTRICT DOCUMENT ''WATER AND SEWER CONSTRUCTION SPECIFICATIONS AND PROCEDURE'', MOST RECENT REVISION.
6. ALL REQUIRED FITTINGS FOR THE WATER MAIN ARE NOT SHOWN ON DRAWINGS. CONTRACTOR SHALL FURNISH AND INSTALL ALL NECESSARY FITTINGS REQUIRED TO CONSTRUCT THE WATER MAIN IN ACCORDANCE WITH CITY OF PORTLAND, STATE OF MAINE, AND AMERICAN WATER WORKS ASSOCIATION STANDARDS AND REGULATIONS.
7. CONTRACTOR SHALL COORDINATE WORK REGARDING ANY WATER MAIN CONNECTION AND WATER MAIN SHUTDOWN WITH THE PORTLAND WATER DISTRICT AT LEAST SEVEN (7) DAYS PRIOR TO CONSTRUCTION.
8. ALL WATER PIPE INSTALLATION SHALL CONFORM WITH THE PORTLAND WATER DISTRICT SPECIFICATIONS AND PROCEDURES, MOST RECENT EDITION.
9. IT SHALL BE THE RESPONSIBILITY OF THE CONTRACTOR TO RELOCATE ALL EXISTING UTILITIES WHICH CONFLICT WITH THE PROPOSED IMPROVEMENTS SHOWN ON THE PLANS.
10. SEWER, GAS, TELEPHONE, ELECTRICITY, CABLE, WATER AND ANY OTHER UTILITY CONNECTIONS SHALL BE REVIEWED BY PLUMBING, ELECTRICAL, AND MECHANICAL DESIGNER FOR CONSISTENCY WITH THEIR PLANS PRIOR TO CONSTRUCTION.
11. COORDINATE EXIT POINT FOR SECONDARY SERVICE WITH THE ARCHITECT/ELECTRICAL ENGINEER. SECONDARY LINE LOCATIONS NOT PROVIDED BY ACORN ENGINEERING WITHIN THE UTILITY PLAN.
12. IT SHALL BE THE CONTRACTOR'S RESPONSIBILITY TO OBTAIN ALL THE NECESSARY PERMITS FOR THE INSTALLATION OF THE UTILITIES AND STORMDRAINS WITHIN THE PUBLIC RIGHT OF WAY. THE CONTRACTOR SHALL SUBMIT A MAINTENANCE OF TRAFFIC PLAN TO THE CITY IN ACCORDANCE WITH THE CITY OF PORTLAND TECHNICAL MANUAL PRIOR TO ANY WORK.
13. THE CONTRACTOR SHALL PROVIDE AND INSTALL ALL BOXES, FITTINGS, CONNECTORS, COVER PLATES AND OTHER MISCELLANEOUS ITEMS NOT NECESSARILY DETAILED ON THE DRAWINGS TO RENDER INSTALLATION OF UTILITIES COMPLETE AND OPERATIONAL AT NO EXTRA EXPENSE TO THE OWNER.

DEMOLITION NOTES:

1. THE FOLLOWING ITEMS ARE TYPICAL OF MATERIAL WHICH MAY STILL REMAIN AFTER THE SITE DEMOLITION OCCURRED. THE CONTRACTOR IS ADVISED TO VISIT THE SITE TO CONFIRM DEMOLITION ITEMS SINCE THE LIST IS NOT INCLUSIVE OF THE SITE CONDITIONS WHICH MAY BE ENCOUNTERED:

   ROCK AND CONCRETE FOUNDATIONS

   CONCRETE SLABS

   BITUMINOUS ASPHALT PAVEMENT

   CONCRETE PADS AND BLOCKS

   FENCE POST AND FENCING

   UNDERGROUND UTILITY LINES

   ABOVE AND OR BELOW FUEL OIL AND PROPANE GAS TANKS

   STORM DRAIN PIPES AND APPURTENANCE STRUCTURES

   OTHER TRASH & MISCELLANEOUS SOLID WASTES

2. ALL DISPOSAL OF DEMOLITION DEBRIS OR WASTE SHALL BE IN ACCORDANCE WITH ALL LOCAL, STATE, & FEDERAL REGULATIONS. CONTRACTORS SHALL PROVIDE OWNER WITH APPROPRIATE "BILLS OF LADING" DEMONSTRATING PROPER DISPOSAL OF ALL MATERIALS.
3. REFER TO THE PHASE I – ENVIRONMENTAL SITE ASSESSMENT BY CREDERE ASSOCIATES, LLC FOR MORE INFORMATION REGARDING THE SITE'S HISTORY AND ENVIRONMENTAL CONCERNS.
4. REFER TO THE PHASE II – ENVIRONMENTAL SITE ASSESSMENT BY BEACON ENVIRONMENTAL CONSULTANTS, LLC, FOR MORE INFORMATION REGARDING INVESTIGATION OF ENVIRONMENTAL CONDITIONS AND ENVIRONMENTAL FINDINGS IDENTIFIED IN THE PHASE I ESA.

PRELIMINARY
NOT ISSUED FOR
CONSTRUCTION

ISSUED FOR	BY	DATE
CITY APP.	WHS	2/26/18

DRAWING NAME: GENERAL NOTES

PROJECT NAME: 82 HANOVER STREET REDEVELOPMENT

CLIENT: TOM WATSON & CO., LLC
PORTLAND, ME

ACORN ENGINEERING, INC.
158 DANFORTH STREET PORTLAND, MAINE 04102 (207) 775-2655

THIS PLAN SHALL NOT BE MODIFIED WITHOUT WRITTEN PERMISSION FROM ACORN ENGINEERING, INC. ANY REVISIONS, ALTERATIONS OR OTHERWISE, SHALL BE AT THE USER'S SOLE RISK AND WITHOUT LIABILITY TO ACORN ENGINEERING, INC.

FILE:	1093_CIVIL
JN:	1093
SCALE:	NTS
DESIGNED BY:	WHS
DRAWN BY:	ADG
CHECKED BY:	WHS

STATE OF MAINE WILLIAM H. SAVAGE No. 11415 LICENSED PROFESSIONAL ENGINEER 2-26-18

DRAWING NO.
C-02

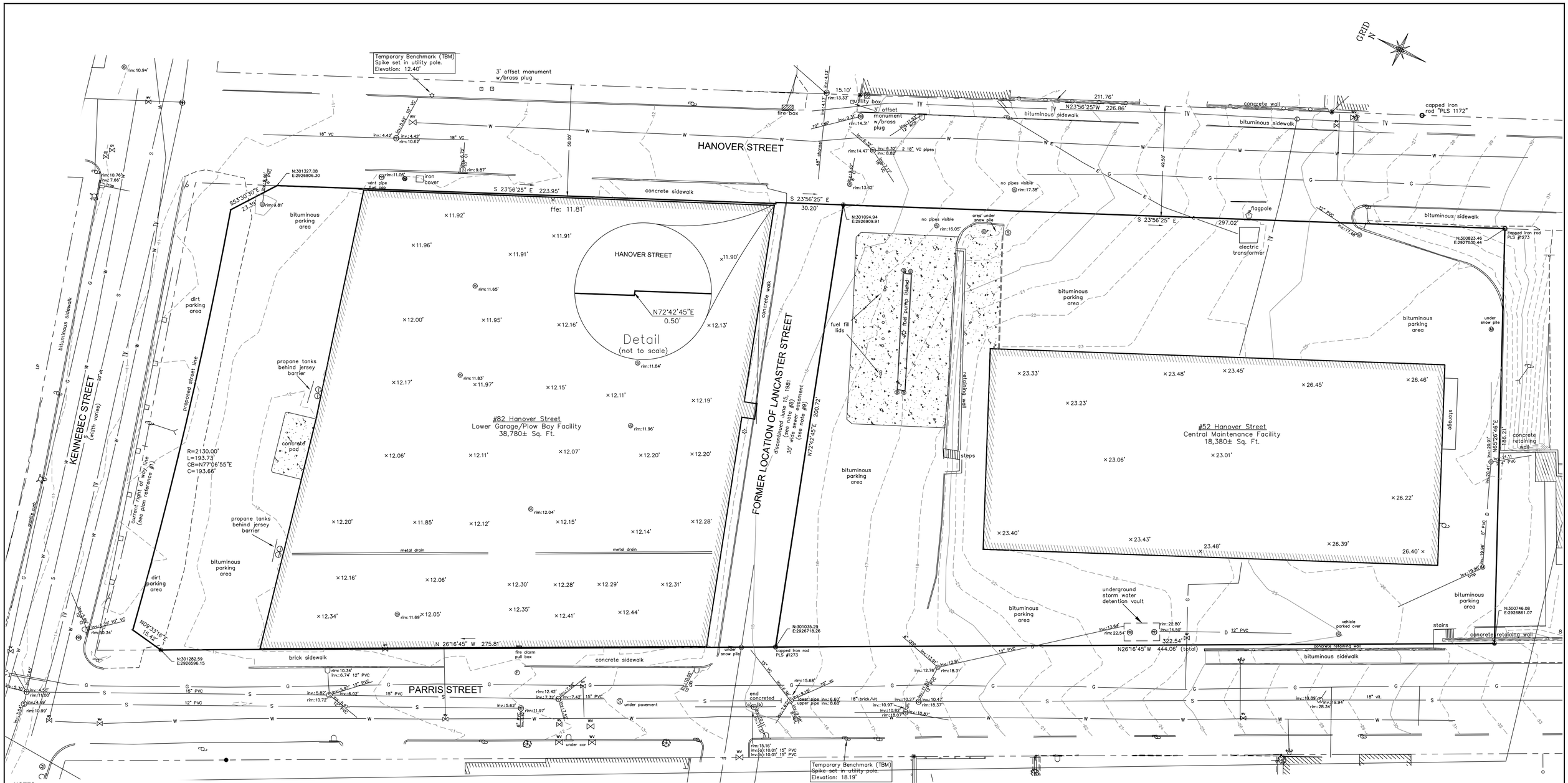

NOTES

1) Book and Page references are to the Cumberland County Registry of Deeds.

2) Bearings are referenced to grid north, Maine State Plane Coordinate System, NAD83, West Zone based on a digital drawing file provided by the City of Portland.

3) Elevations are based the City of Portland datum, tied to City TBM #59, "Top of granite monument @ drill hole, below iron drip box, in concrete sidewalk ramp at southwest corner Alder/Kennebec. El.=10.145'.

4) Utility information on this plan is approximate, based on location of visible features and information contained on plans and drawings provided by others. DigSafe and/or the appropriate utilities should be contacted prior to any construction.

5) Properties lie within Zone C based on FIRM Community #230051 Panel #0013–B, dated July 17, 1988. They do not lie within a special flood hazard area.

6) Boundary and right of way information shown per plan references 1, 2, & 3.

7) Project area was covered by snow and ice at the time of the survey and some features may have been obscured and not shown on this plan.

8) The portion of Lancaster Street shown was discontinued June 15, 1981, City of Portland records, Volume 98, Page 187. This discontinuance does not expressly exclude public rights over the discontinued street. According to 23 M.R.S.A. 3026(1) a street discontinuance after September 3, 1965, leaves an automatic public easement unless specific language states otherwise. A title opinion by a qualified attorney is suggested in order to confirm the public rights in the discontinued street.

9) A sewer easement is reserved by the City of Portland over the discontinued portion of Lancaster Street per the June 15, 1981 discontinuance found in the City of Portland records Volume 98, Page 187.

P AN RE ERENCES

1) Plan of Standard Boundary Survey, 82 Hanover Street, made for City of Portland by Titcomb Associates dated November 1, 2017.

2) Plan of Standard Boundary Survey, 52 Hanover Street, made for City of Portland by Titcomb Associates dated November 2, 2017.

3) Plan of Subdivision Plat made for City of Portland by Titcomb Associates, dated November 29, 2017.

O NER O RECORD

City of Portland
389 Congress Street
Portland, ME 04101

Book 3197, Page 20
Book 3197, Page 422
Book 3199, Page 832
Book 3200, Page 773
Book 3378, Page 214
Book 3419, Page 109
Book 3541, Page 11
Book 3771, Page 344
Book 4740, Page 210
Book 6246, Page 337
Book 6401, Page 196

E END

Monument – found	Catch basin
Iron marker – found	Catch basin w/ throat
Nail w/washer – found	Drain manhole
Property line (locus)	Manhole
Property line (abutter)	Bollard
Right of way line	Sewer line
Chain link fence	Storm drain
Guard rail	Underground water line
Edge of pavement	Underground gas line
Edge of gravel	Underground electric line
Curb	Underground communication line
Sign	Contours (1ft)
Lamp or light pole	Contours (5ft)
Utility pole	Now or formerly of
Guy wire	Deed reference (Book/Page)
Gas valve	Existing building
Water valve	
Water shutoff	Concrete
Fire hydrant	Spot elevation
Sewer manhole	Finished floor elevation
Telephone manhole	

N/F
1234/567

X 10.00'
X FFE: 10.00'

SCALE IN FEET
20 0 20 40
1" = 20'

Rev. 1	05/02/18	Additional notes per City comments.	nse

PLAN OF
E□□□□□ C□□d□□□□
52 & 82 Hanover Street — Portland, Maine

MADE FOR
A□□r□ E□□□□□r□□, I□□.
154 York Street, Suite 2 — Portland, Maine

JOB #217075	DATE: January 25, 2018	SCALE: 1" = 20'
BOOK #906		
217075_Topo.dwg		

Titcomb Associates
133 Gr□□R□□d, F□□ □□□, M□□□ 04105
(20□) □9□-9199 □□□.□□□□.□□□□□□□

CERTIFICATION

This survey conforms to the current standards of practice set forth by the Maine State Board of Licensure for Land Surveyors.

Nicholas S. Elliston, P.L.S. #2518

STATE OF MAINE
NICHOLAS S. ELLISTON
#2518
PROFESSIONAL LAND SURVEYOR

GENERAL NOTES:

1. ANY EXISTING ASPHALT TO BE REMOVED SHALL BE STRIPPED AND PROPERLY DISPOSED OF OFFSITE.
2. GRANITE CURB TO BE REMOVED, STOCKPILED AND RESET IN ACCORDANCE WITH DETAIL. BROKEN CURB SHALL BE PROPERLY DISPOSED OF AND SHALL BE REPLACED AT THE CONTRACTOR'S EXPENSE.
3. ALL DISPOSAL OF DEMOLITION DEBRIS OR WASTE SHALL BE IN ACCORDANCE WITH ALL LOCAL, STATE, & FEDERAL REGULATIONS. CONTRACTOR SHALL PROVIDE OWNER WITH APPROPRIATE "BILLS OF LADING" TO DEMONSTRATE PROPER DISPOSAL OF ALL MATERIALS.
4. SITE DEMOLITION SHALL NOT OCCUR UNTIL PROPER ABATEMENT PROCEDURES HAVE OCCURRED. ABATEMENT, IF NECESSARY, SHALL BE THE RESPONSIBILITY OF THE CONTRACTOR.
5. THE CONTRACTOR SHALL CALL THE APPROPRIATE UTILITY COMPANIES AND DIG SAFE AT LEAST 72 HOURS PRIOR TO EXCAVATION TO REQUEST EXACT FIELD LOCATION FOR UTILITIES. OTHERWISE IT SHALL BE THE CONTRACTOR'S RESPONSIBILITY TO FIELD VERIFY THE LOCATION OF UNDERGROUND UTILITIES AND LOCATE POTENTIAL CONFLICT WITH THE APPROVED PLANS PRIOR TO CONSTRUCTION.
6. CONTRACTOR TO COORDINATE SITE DEMOLITION WITH TOM WATSON & CO., LLC.
7. NOTE THAT ALL CONSTRUCTION SIGNAGE IS TEMPORARY AND WILL BE REMOVED AT PROJECT COMPLETION.
8. SEDIMENT BARRIERS TO BE PLACED PER PLAN ALONG THE PROPERTY LINES, DOWN GRADIENT OF THE PROPOSED PROJECT WORK PER DETAIL.
9. CONTRACTOR SHALL PLACE CATCH BASIN INLET PROTECTION ON CATCH BASINS AND FIELD INLETS DOWN-GRADIENT OF ALL NON-STABILIZED SURFACES, PER DETAIL.
10. CONTRACTOR SHALL INSTALL CONSTRUCTION ENTRANCE AT ALL LOCATIONS OF INGRESS AND EGRESS DURING CONSTRUCTION TO THE SITE. SEE DETAIL.
11. DEMOLITION PLAN IS NOT INCLUSIVE OF ALL EXISTING ITEMS TO BE REMOVED AS PART OF SITE CONSTRUCTION INCLUDING BUT NOT LIMITED TO LANDSCAPING, UTILITIES, WORK WITHIN THE ROW, ETC. ALL DEMOLITION WORK SHALL BE IN ACCORDANCE WITH THE CITY OF SOUTH PORTLAND REGULATIONS.
12. ALL EROSION CONTROL MEASURES ARE THE RESPONSIBILITY OF THE CONTRACTOR AND SHALL BE INSTALLED AND MAINTAINED UNTIL THE SITE IS PERMANENTLY STABILIZED IN ACCORDANCE WITH MDEP STANDARDS.

NOTES:

1. CONTRACTOR SHALL ADD STONE TO ENTRANCE AS MUD/SILT MATERIAL ACCUMULATES
2. STONE SHALL BE 2"-3" COARSE AGGREGATE
3. CONSTRUCTION ENTRANCE SHALL BE GRADED TO NOT ALLOW ANY STORMWATER TO BE CONVEYED OFF SITE. IN SITUATIONS WHERE THIS IS NOT POSSIBLE, ANY STORMWATER CONVEYED OFFSITE SHALL BE TREATED OR RETAINED IN A MANNER APPROVED BY ENGINEER.
4. WHEN NECESSARY, ON-SITE VEHICLES SHALL HAVE THEIR WHEELS CLEANED PRIOR TO LEAVING SITE.
5. CONSTRUCTION ENTRANCE SHALL BE GRADED IN A MANNER THAT PREVENTS TRACKING OF SEDIMENTS ONTO PUBLIC RIGHT-OF-WAY

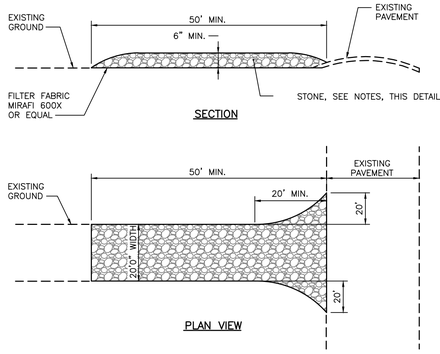

STABILIZED CONSTRUCTION ENTRANCE

NOT TO SCALE

ISSUED FOR	BY	DATE
CITY APP.	WHS	2/26/18
COMMENT RESPONSE	WHS	4/09/18
COMMENT RESPONSE 2	WHS	5/07/18

DRAWING NAME: CONSTRUCTION MANAGEMENT & EROSION CONTROL PLAN

PROJECT NAME: 82 HANOVER STREET REDEVELOPMENT

CLIENT: TOM WATSON & CO., LLC
PORTLAND, ME

ACORN ENGINEERING, INC.

THIS PLAN SHALL NOT BE MODIFIED WITHOUT WRITTEN PERMISSION FROM ACORN ENGINEERING, INC. ANY MODIFICATIONS MADE WITHOUT PERMISSION OR OTHERWISE, SHALL BE AT THE USER'S SOLE RISK AND WITHOUT LIABILITY TO ACORN ENGINEERING, INC.

ACORN ENGINEERING, INC.
158 DANFORTH ST PORTLAND, MAINE 04102
(207) 775-2655

FILE:	1093_CIVIL
JN:	1093
SCALE:	1"=20'
DESIGNED BY:	SJL
DRAWN BY:	SJL
CHECKED BY:	WHS

STATE OF MAINE
WILLIAM H. SAVAGE
No. 11416
5-7-18
LICENSED
PROFESSIONAL ENGINEER

DRAWING NO.
C-03

SPACE AND BULK STANDARDS

ZONE: B-7	REQUIRED	EXISTING	PROPOSED
MINIMUM LOT SIZE	NONE	57,956 SF	57,956 SF
MINIMUM STREET FRONTAGE	NONE	768 FT.	768 FT.
MINIMUM FRONT YARD SETBACK	NONE	62 FT	62 FT
MAXIMUM FRONT STREET SETBACK	10 FT. *	62 FT	62 FT
MINIMUM REAR YARD SETBACK	NONE	30.6 FT.	30.6 FT.
MINIMUM SIDE YARD SETBACK	NONE	0.34 FT	0.34 FT
MINIMUM LENGTH OF BUILDING WALL ALONG STREET FRONTAGE	1. MIN. 75% OF LOT STREET FRONTAGE WITHIN 10' OF SREET = 576'; OR 2. MIN. 25% OF BUILDING PERIMETER WITHIN 10 OF STREET = 199'	KENNEBEC =211 FT PARRIS = 200.5 FT HANOVER = 184 FT	KENNEBEC = 211 FT PARRIS = 200.5 FT HANOVER = 184 FT
MAXIMUM LOT COVERAGE	100%	67%	67%
MAXIMUM RESIDENTIAL DENSITY	NONE	N/A	N/A
MAXIMUM BUILDING HEIGHT	105 FT.	27 FT.	27 FT.
VEHICLE PARKING	62 SPACES **	46	39
BICYCLE PARKING	2 PER 10 REQUIRED VEHICLES SPACES = 12 SPACES	0	18

*STREET SETBACK CAN BE INCREASED IF ALL CONDITIONS LISTED IN SECTION 14-298, C. 2. a. ARE MET
** SEE PARKING REQUIREMENTS SUMMARY TABLE

PARKING REQUIREMENTS

UNIT	SQUARE-FEET	USER TYPE	BULK STORAGE OR FOOD PREP AREA	PARKING REQUIREMENT (EXCLUDING BULK STORAGE AND FOOD PREP AREAS)	REQUIRED SPACES
1	2,382	BAR/EATERY	952.8 SF	1 SPACE/150 SF	9.52
2	3,109	RESTAURANT	1,243.6 SF	1 SPACE/150 SF	12.44
3	5,957	INDUSTRIAL (PRODUCTION)	0 SF	1 SPACE/1,000 SF IN EXCESS OF 3,000 SF	2.96
4	2,194	RETAIL	1,974.6 SF	1 SPACE/200 SF IN EXCESS OF 2,000 SF	0
5	1,356	COFFEE SHOP	542.4 SF	1 SPACE/150 SF	5.42
6	1,425	RETAIL	1,282.5 SF	1 SPACE/200 SF IN EXCESS OF 200 SF	0
7	1,587	ART GALLERY	1,428.3 SF	1 SPACE/200 SF IN EXCESS OF 2,000 SF	0
8	1,983	RETAIL	1,784.7 SF	1 SPACE/200 SF IN EXCESS OF 2,000 SF	0
9	2,062	RETAIL	1,855.8 SF	1 SPACE/200 SF IN EXCESS OF 2,000 SF	0
10	1,796	BAR/EATERY	718.4 SF	1 SPACE/150 SF	7.18
11	2,915	FITNESS CENTER *	0 SF	1 SPACE/400 SF	7.29
12	6,531	BREWERY	5,531 SF	1 SPACE/150 SF	6.67
OFFICE 1	1,860	PORT PROPERTIES	0 SF	1 SPACE/400 SF	4.65
OFFICE 2	1,869	OFFICE USER	0 SF	1 SPACE/400 SF	4.67
					TOTAL = 61 SPACES

* TO BE CONFIRMED BY CITY PLANNING

PLANT SCHEDULE

ID	BOTANICAL NAME	COMMON NAME	QTY (TBD)	SIZE
TREES				
CC	CARPINUS CAROLINIANA	AMERICAN HORNBEAM	4	2" CA. BB
AR	ACER RUBRUM	ARMSTRONG RED MAPLE	4	2" CA. BB
SHRUBS				
CA	CLETHRA ALNIFOLIA	SUMMERSWEET	6	3 GAL
MG	MYRICA GALE	SWEET GALE	7	3 GAL
PERENNIALS/GROUNDCOVER				
EC	ECHINACEA*	CONEFLOWER	41	1 GAL.
CA	CALAMAGROSTIS ACUTIFLORA 'KARL FORESTER'	KARL FORESTER	5	1 GAL
*PROVIDE THREE DIFFERENT VARITIES/COLORS OF ECHINACEA				

GENERAL NOTES:

1. INTERIOR STRIPING AS INDICATED ON SITE PLAN SHALL BE 4" WIDE. STRIPING SHALL BE WHITE UNLESS OTHERWISE NOTED.
2. EXISTING ASPHALT TO BE REMOVED SHALL BE STRIPPED AND PROPERLY DISPOSED OF OFFSITE.
3. CURB TO BE REMOVED, STOCKPILED AND RESET IN ACCORDANCE WITH DETAIL. BROKEN CURB SHALL BE PROPERLY DISPOSED OF AND SHALL BE REPLACED AT THE CONTRACTOR'S EXPENSE.
4. CONTRACTOR SHALL PLACE NEW CURBING IN LOCATIONS AS NOTED WITHOUT EXISTING CURBING, IN ACCORDANCE WITH DETAIL. FOR PURPOSES OF BIDDING, CONTRACTOR SHALL NOTE THAT ALL TIPDOWNS AND SIDEWALKS ALONG PARRIS AND HANOVER SHALL BE RECONSTRUCTED IN ACCORDANCE WITH DETAIL, AND THAT EXISTING TIPDOWNS MAY NOT CURRENTLY MEET CITY OF PORTLAND STANDARDS.
5. ALL PAVEMENT JOINTS SHALL BE SAWCUT AND TACK COATED PRIOR TO PAVING TO PROVIDE A DURABLE AND UNIFORM JOINT.

PARKING SUMMARY

PARKING DIMENSION	# PARKING SPACES
STANDARD (9'X18')	18
COMPACT (9'X15')	19
ADA (8'X18')	2
TOTAL SPACES	39

LEGEND

HATCH STYLE	ASSOCIATED AREAS
	BRICK
	GREEN SPACE
	CONCRETE

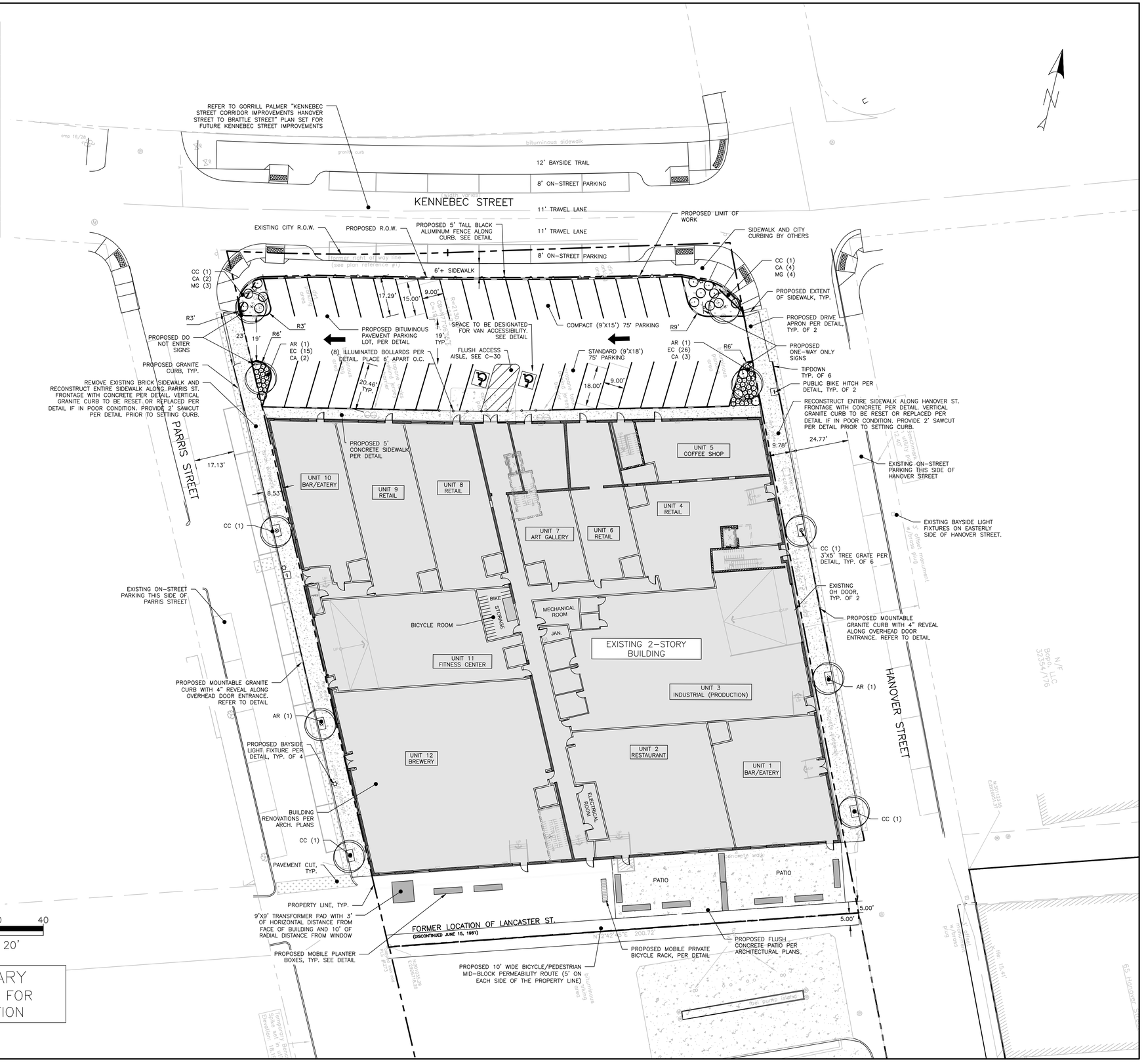

PRELIMINARY
NOT ISSUED FOR CONSTRUCTION

ISSUED FOR	BY	DATE
CITY APP.	WHS	2/26/18
SITE UPDATES	WHS	3/16/18
COMMENT RESPONSE	WHS	4/09/18
COMMENT RESPONSE 2	WHS	5/07/18
STAFF COMMENTS	WHS	5/11/18

DRAWING NAME: SITE & LANDSCAPE PLAN

PROJECT NAME: 82 HANOVER STREET REDEVELOPMENT

CLIENT: TOM WATSON & CO., LLC
PORTLAND, ME

ACORN ENGINEERING, INC.

THIS PLAN SHALL NOT BE MODIFIED WITHOUT WRITTEN PERMISSION FROM ACORN ENGINEERING, INC. ANY MODIFICATIONS MADE WITHOUT PERMISSION OR OTHERWISE, SHALL BE AT THE USER'S SOLE RISK AND WITHOUT LIABILITY TO ACORN ENGINEERING, INC.

ACORN ENGINEERING, INC.
158 DANFORTH ST. PORTLAND, MAINE 04102
(207) 775-2655

FILE:	1093_CIVIL
JN:	1093
SCALE:	1"=20'
DESIGNED BY:	WHS
DRAWN BY:	SJL
CHECKED BY:	WHS

STATE OF MAINE
WILLIAM H. SAVAGE
No. 11410
5-10-18
LICENSED
PROFESSIONAL ENGINEER

DRAWING NO.
C-10

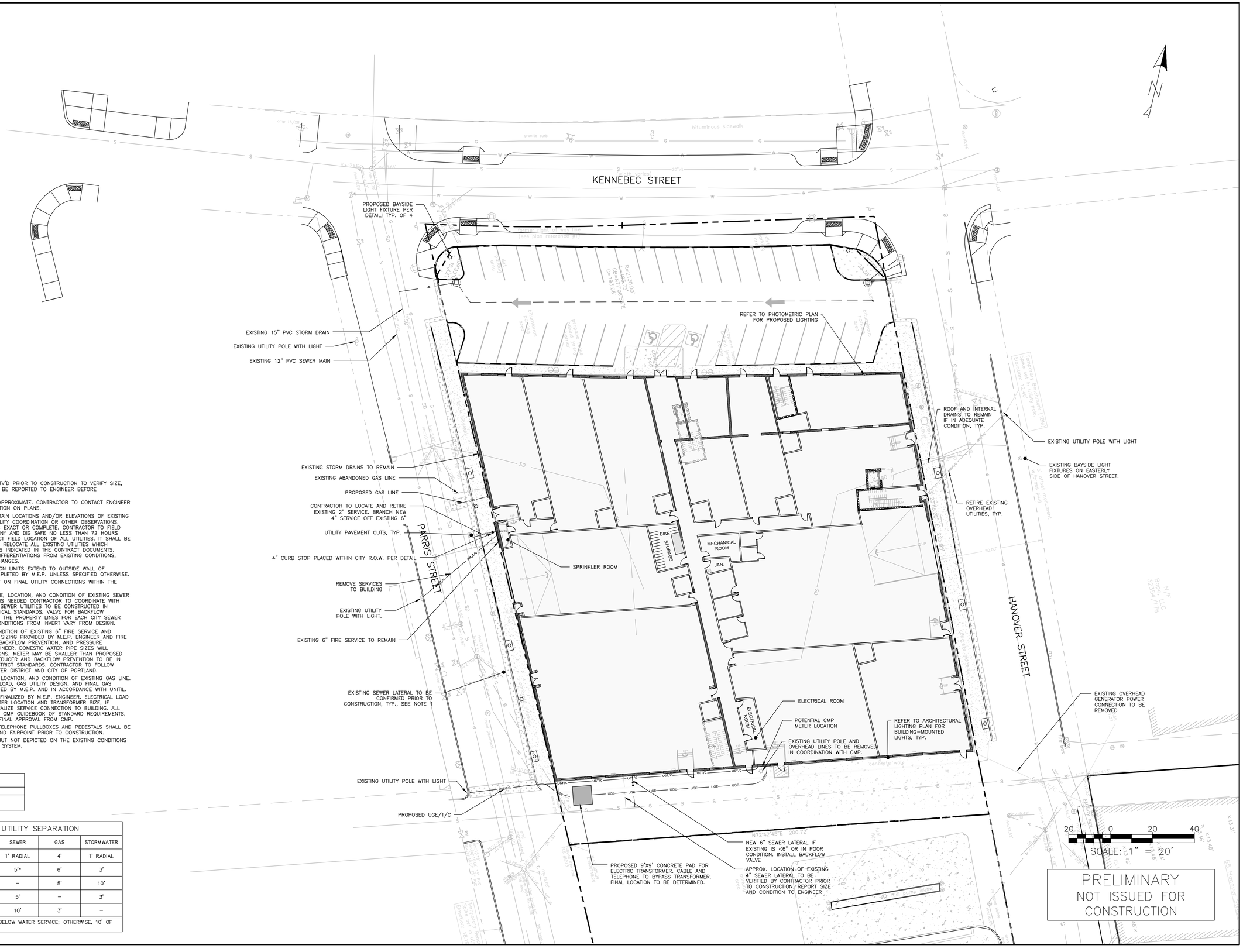

GENERAL NOTES:

1. EXISTING SEWER AND STORM DRAINS TO BE TV'D PRIOR TO CONSTRUCTION TO VERIFY SIZE, LOCATION, AND CONDITION. INFORMATION TO BE REPORTED TO ENGINEER BEFORE CONSTRUCTION.
2. LOCATION OF PROPOSED CONNECTIONS ARE APPROXIMATE. CONTRACTOR TO CONTACT ENGINEER IF FIELD INFORMATION VARIES FROM INFORMATION ON PLANS.
3. CONTRACTOR IS TO BE CAUTIONED THAT CERTAIN LOCATIONS AND/OR ELEVATIONS OF EXISTING UTILITIES HAVE BEEN PROVIDED THROUGH UTILITY COORDINATION OR OTHER OBSERVATIONS. INFORMATION IS NOT TO BE RELIED UPON AS EXACT OR COMPLETE. CONTRACTOR TO FIELD VERIFY AND COORDINATE WITH UTILITY COMPANY AND DIG SAFE NO LESS THAN 72 HOURS PRIOR TO ANY EXCAVATION TO REQUEST EXACT FIELD LOCATION OF ALL UTILITIES. IT SHALL BE THE RESPONSIBILITY OF THE CONTRACTOR TO RELOCATE ALL EXISTING UTILITIES WHICH CONFLICT WITH THE PROPOSED IMPROVEMENTS INDICATED IN THE CONTRACT DOCUMENTS. CONTRACTOR TO NOTIFY ENGINEER OF ANY DIFFERENTIATIONS FROM EXISTING CONDITIONS, INCLUDING UTILITY SURVEY, PRIOR TO ANY CHANGES.
4. FOR ALL UTILITIES, ACORN ENGINEERING DESIGN LIMITS EXTEND TO OUTSIDE WALL OF BUILDING. METERING OF UTILITIES TO BE COMPLETED BY M.E.P. UNLESS SPECIFIED OTHERWISE.
5. CONTRACTOR TO COORDINATE WITH ARCHITECT ON FINAL UTILITY CONNECTIONS WITHIN THE BUILDING.
6. SEWER UTILITIES: CONTRACTOR TO VERIFY SIZE, LOCATION, AND CONDITION OF EXISTING SEWER CONNECTION. IF NEW SEWER SERVICE LINE IS NEEDED CONTRACTOR TO COORDINATE WITH ARCHITECT FOR FINAL SERVICE CONNECTION. SEWER UTILITIES TO BE CONSTRUCTED IN ACCORDANCE WITH CITY OF PORTLAND TECHNICAL STANDARDS. VALVE FOR BACKFLOW PREVENTION SHALL BE INSTALLED WITHIN THE THE PROPERTY LINES FOR EACH CITY SEWER CONNECTION. CONTACT ENGINEER IF FIELD CONDITIONS FROM INVERT VARY FROM DESIGN.
7. WATER UTILITIES: CONTRACTOR TO VERIFY CONDITION OF EXISTING 6" FIRE SERVICE AND REPLACE IF IN POOR CONDITION. FINAL PIPE SIZING PROVIDED BY M.E.P. ENGINEER AND FIRE PROTECTION DESIGNER. INTERNAL METERING, BACKFLOW PREVENTION, AND PRESSURE REDUCERS TO BE COMPLETED BY M.E.P. ENGINEER. DOMESTIC WATER PIPE SIZES WILL DETERMINE THE FINAL WATER METERING OPTIONS. METER MAY BE SMALLER THAN PROPOSED WATER MAIN. WATER METERING, PRESSURE REDUCER AND BACKFLOW PREVENTION TO BE IN ACCORDANCE WITH THE PORTLAND WATER DISTRICT STANDARDS. CONTRACTOR TO FOLLOW METERING GUIDELINES OF THE PORTLAND WATER DISTRICT AND CITY OF PORTLAND.
8. GAS UTILITIES: CONTRACTOR TO VERIFY SIZE, LOCATION, AND CONDITION OF EXISTING GAS LINE. IF NEW GAS LINE IS NEEDED, PROJECT GAS LOAD, GAS UTILITY DESIGN, AND FINAL GAS SERVICE LOCATION AND METERS TO BE DEFINED BY M.E.P. AND IN ACCORDANCE WITH UNITIL.
9. ELECTRIC UTILITIES: ELECTRIC DESIGN TO BE FINALIZED BY M.E.P. ENGINEER. ELECTRICAL LOAD TO BE DETERMINED BY M.E.P. ENGINEER. METER LOCATION AND TRANSFORMER SIZE, IF NECESSARY DEFINED BY M.E.P. M.E.P. TO FINALIZE SERVICE CONNECTION TO BUILDING. ALL ELECTRIC CONSTRUCTION SHALL CONFORM TO CMP GUIDEBOOK OF STANDARD REQUIREMENTS, MOST RECENT EDITION. DESIGN SUBJECT TO FINAL APPROVAL FROM CMP.
10. IF NEEDED, LOCATIONS OF NEW CABLE AND TELEPHONE PULLBOXES AND PEDESTALS SHALL BE DETERMINED BY CHARTER COMMUNICATIONS AND FAIRPOINT PRIOR TO CONSTRUCTION.
11. ALL UTILITIES SHOWN ON THE CIVIL PLANS, BUT NOT DEPICTED ON THE EXISTING CONDITIONS PLAN ARE FROM THE CITY OF PORTLAND GIS SYSTEM.

LEGEND	
HATCH STYLE	ASSOCIATED AREAS
	UTILITY CUT

MINIMUM HORIZONTAL UTILITY SEPARATION					
UTILITY	UGE/T/C	WATER	SEWER	GAS	STORMWATER
UGE/T/C	–	6'	1' RADIAL	4'	1' RADIAL
WATER	6'	–	5'*	6'	3'
SEWER	1' RADIAL	5'*	–	5'	10'
GAS	4'	6'	5'	–	3'
STORMWATER	1' RADIAL	3'	10'	3'	–

*PERMISSIBLE ONLY IF SEWER IS LAID MIN. 18" BELOW WATER SERVICE; OTHERWISE, 10' OF HORIZONTAL SEPARATION MUST BE MAINTAINED.

ISSUED FOR	BY	DATE
CITY APP.	WHS	2/26/18
SITE UPDATES	WHS	3/16/18
COMMENT RESPONSE	WHS	4/09/18

DRAWING NAME: UTILITY PLAN

PROJECT NAME: 82 HANOVER STREET REDEVELOPMENT

CLIENT: TOM WATSON & CO., LLC
PORTLAND, ME

ACORN ENGINEERING, INC.

THIS PLAN SHALL NOT BE MODIFIED WITHOUT WRITTEN PERMISSION OF ACORN ENGINEERING, INC. ANY MODIFICATION, REPRODUCTION OR OTHERWISE, SHALL BE AT THE USER'S SOLE RISK AND WITHOUT LIABILITY TO ACORN ENGINEERING, INC.

ACORN ENGINEERING, INC.
158 DANFORTH STREET, PORTLAND, MAINE 04102
(207) 775-2655

FILE:	1093_CIVIL
JN:	1093
SCALE:	1"=20'
DESIGNED BY:	WHS
DRAWN BY:	ADG
CHECKED BY:	WHS

STATE OF MAINE WILLIAM H. SAVAGE No. 11449 4-9-18 PROFESSIONAL ENGINEER

DRAWING NO.
C-20

GENERAL NOTES:

1. ALL WORK WITHIN THE CITY STREET RIGHT OF WAY SHALL MEET APPLICABLE STANDARDS SET FORTH BY THE CITY OF SOUTH PORTLAND.
2. CONTRACTOR SHALL ENSURE THAT FOUNDATION DRAINS AND UNDERDRAINS ARE CONSTRUCTED WITH POSITIVE OUTLET TO PROPOSED CONNECTIONS.
3. NO SLOPE WITHIN THE ADA PARKING AND ACCESS AISLE SHALL EXCEED 2%.
4. ALL SPOT GRADES ARE PROPOSED UNLESS PRECEDED BY "EX."
5. ALL UTILITIES SHOWN ON THE CIVIL PLANS, BUT NOT DEPICTED ON THE EXISTING CONDITIONS PLAN ARE FROM THE CITY OF PORTLAND GIS SYSTEM.
6. CONTRACTOR TO CLEAN GRAVEL AND DEBRIS FROM EXISTING CATCH BASIN AND ENSURE FUNCTIONALITY. REPLACE STRUCTURE PER DETAIL IF IN SUBSTANDARD CONDITION.
7. ROOF AND INTERNAL DRAINS TO BE TV'D TO ENSURE FUNCTIONALITY.

ISSUED FOR	BY / DATE
CITY APP.	WHS 2/26/18
SITE UPDATES	WHS 3/16/18
COMMENT RESPONSE	WHS 4/09/18
STAFF COMMENTS	WHS 5/11/18

DRAWING NAME: GRADING & DRAINAGE PLAN

PROJECT NAME: 82 HANOVER STREET REDEVELOPMENT

CLIENT: TOM WATSON & CO., LLC
PORTLAND, ME

ACORN ENGINEERING, INC.

THIS PLAN SHALL NOT BE MODIFIED WITHOUT WRITTEN PERMISSION FROM ACORN ENGINEERING, INC. ANY MODIFICATIONS, ALTERATIONS OR OTHERWISE, SHALL BE AT THE USER'S SOLE RISK AND WITHOUT LIABILITY TO ACORN ENGINEERING, INC.

ACORN ENGINEERING, INC.
158 DANFORTH STREET PORTLAND, MAINE 04102
(207) 775-2655

FILE:	1093_CIVIL
JN:	1093
SCALE:	1"=20'
DESIGNED BY:	SJL
DRAWN BY:	SJL
CHECKED BY:	WHS

STATE OF MAINE WILLIAM H. BAVAGE No. 11419 5-10-18 LICENSED PROFESSIONAL ENGINEER

DRAWING NO.
C-30

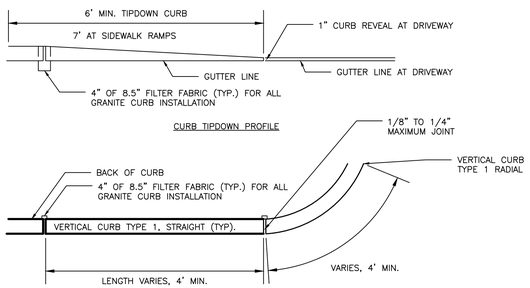

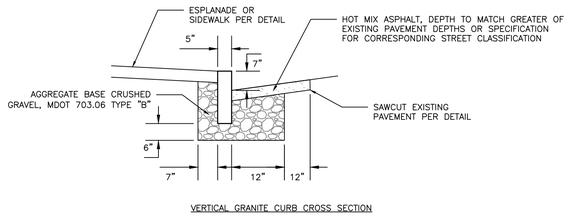

VERTICAL GRANITE CURB AND TIPDOWN INSTALLATION

NOT TO SCALE

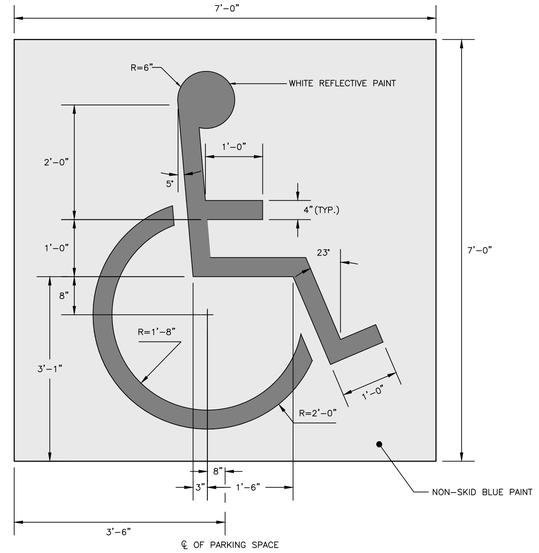

INTERNATIONAL BARRIER FREE SYMBOL

NOT TO SCALE

NOTES:

1. ALL ASPECTS OF RESERVED PARKING SIGN CONSTRUCTION SHALL BE IN ACCORDANCE WITH MANUAL ON UNIFORM TRAFFIC CONTROL DEVICES, 2009 OR MOST RECENT EDITION

2. SIGN SHALL BE CONSTRUCTED AS SIGN R7-8 UNDER THE "PARKING AND STANDING SIGNS AND PLAQUES" (R7 SERIES) WITHIN THE MANUAL ON UNIFORM TRAFFIC CONTROL DEVICES, 2009 OR MOST RECENT EDITION. VAN ACCESSIBILITY SHALL BE CONSTRUCTED AS SIGN R7-8a OR R7-8b.

3. SIGN POST CONSTRUCTION AND MOUNTING SHALL BE IN ACCORDANCE WITH CHAPTER 2A OF THE MANUAL ON UNIFORM TRAFFIC CONTROL DEVICES, 2009 OR MOST RECENT EDITION.

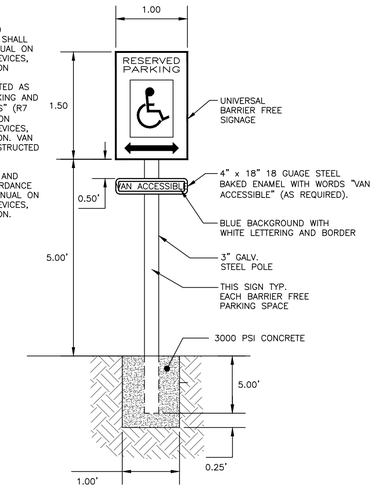

BARRIER FREE PARKING SIGN

NOT TO SCALE

NOTES:

1. SAWCUT EXISTING PAVEMENT AND REMOVE 2' STRIP OF EXISTING PAVEMENT. APPLY BITUMNOUS TACK COAT PRIOR TO PLACEMENT OF NEW BITUMINOUS PAVEMENT.
2. THE NEW PAVEMENT SECTION SHALL MEET THE CITY OF PORTLAND ARTERIAL BITUMINOUS PAVEMENT SECTION DETAIL AT A MINIMUM OR THE THE EXISTING PAVEMENT AND AGGREGATE BASE AND SUBBASE DEPTH WHICHEVER IS GREATER.

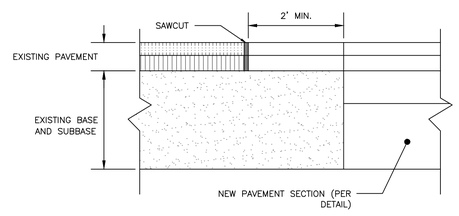

PAVEMENT SAWCUT DETAIL

NOT TO SCALE

NOTES:

1. BICYCLE RACK SHALL HAVE CAPACITY FOR FOURTEEN BICYCLES.
2. BICYCLE RACK PARTS SHALL BE OF UNIFORM COLOR AND SHALL BE FINISHED IN ACCORDANCE WITH PRODUCT SPECIFICATION. PER CITY OF PORTLAND TECHNICAL STANDARDS ALL BIICYCLE RACKS WITHIN THE RIGHT-OF-WAY SHALL MATCH THE FURNITURE COLOR FOR THAT LOCATION AS DESCRIBED IN THE MUNICIPAL LIGHTING STANDARDS; IF NO DESIGNATED COLOR FOR THAT AREA EXISTS, BICYCLE RACKS SHALL BE BLACK.
3. BICYCLE RACK SHALL BE INSTALLED IN ACCORDANCE WITH MANUFACTURER'S MOST RECENT INSTALLATION RECOMMENDATIONS, AND SHALL BE INSTALLED WITH A SURFACE MOUNT UNLESS OTHERWISE APPROVED BY ENGINEER.
4. BICYCLE RACK SHALL BE "DERO EVENT RACK", AS MANUFACTURED BY DERO BIKE RACKS.
5. MANUFACTURER'S RECOMMENDED OFFSETS SHALL BE ENFORCED WHERE POSSIBLE.

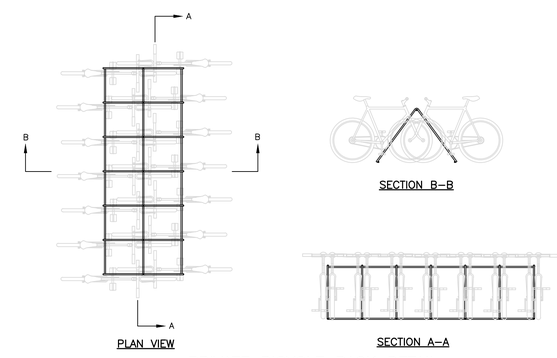

PRIVATE BICYCLE RACK DETAIL

NOT TO SCALE

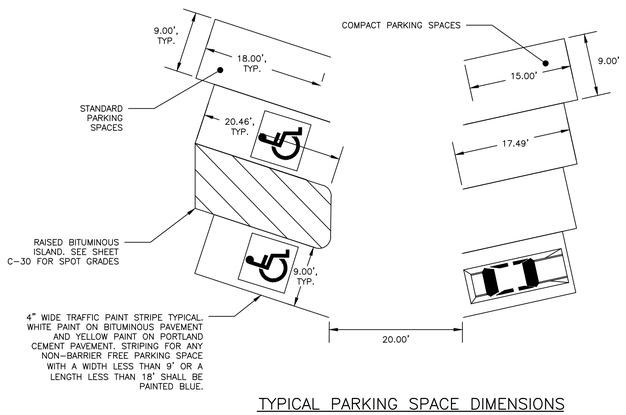

TYPICAL PARKING SPACE DIMENSIONS

NOT TO SCALE

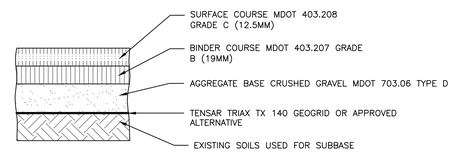

NOTE:

1. THE EXISTING LAYER(S) OF PAVEMENT SHALL BE REMOVED. THE EXISTING SOILS SHALL BE USED AS THE SUBBASE.
2. PROOF ROLE THE SUBBASE TO 95% MAXIMUM DRY DENSITY IN ACCORDANCE WITH ASTM D-1557 AFTER THE PAVEMENT DRAINS HAVE BEEN INSTALLED AND ARE FULLY FUNCTIONING. MINIMUM OF 5 MODIFIED PROCTOR TESTS ON EXISTING SUBGRADE MATERIALS, BASED UPON FIELD OBSERVATIONS OF MATERIAL GRADATION. FIELD DENSITY TESTING AT A MINIMUM OF 50 FOOT SPACING.
3. COMPACT THE AGGREGATE BASE TO 95% MAXIMUM DRY DENSITY IN ACCORDANCE WITH ASTM D-1557.
4. PLACE GEOGRID DIRECTLY ON THE SUBBASE SURFACE, IN ACCORDANCE WITH MANUFACTURERS RECOMMENDATIONS WITH A MINIMUM 1 FT OVERLAP. MINIMUM 2 MODIFIED LABORATORY PROCTOR TEST AND FIELD DENSITY TESTING AT APPROXIMATELY MINIMUM SPACING OF 50 FEET ON CENTER PER LIFT.
5. PAVING OPERATIONS SHALL BE SUBJECT TO THE MINIMUM REQUIREMENTS OF THE MAINE DOT SECTION 401.19 QUALITY CONTROL METHOD D, UNLESS WAIVED BY THE OWNER.

	THICKNESS OF LAYERS
STANDARD	LAYERS
1-1/2"	SURFACE COURSE MDOT 403.208 GRADE C (12.5mm)
2-1/2"	BINDER COURSE MDOT 403.207 GRADE B (19mm)
6"	AGGREGATE BASE CRUSHED GRAVEL MDOT 703.06 TYPE D

HEAVY DUTY BITUMINOUS PAVEMENT PROFILE: PARKING LOT & LANCASTER COURT

NOT TO SCALE

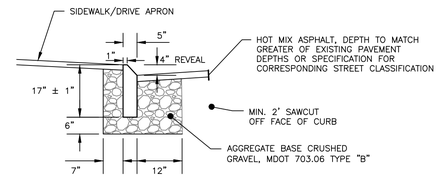

NOTES:

1. INSTALL PER MANUFACTURER'S SPEC'S.
2. PROVIDE CUSTOM TRANSITION CURB THAT TIPS DOWN 3" IN BETWEEN MOUNTABLE AND VERTICAL CURBS. SAWCUT TRANSITION STONE IN THE FIELD FOR FLUSH JOINT WITH ADJACENT VERTICAL CURB

MOUNTABLE BEVELED GRANITE CURB

NOT TO SCALE

PRELIMINARY
NOT ISSUED FOR CONSTRUCTION

ISSUED FOR	BY	DATE
CITY APP.	WHS	2/26/18
COMMENT RESPONSE	WHS	4/9/18
COMMENT RESPONSE 2	WHS	5/7/18

DRAWING NAME: SITE DETAILS – 1

PROJECT NAME: 82 HANOVER STREET REDEVELOPMENT

CLIENT: TOM WATSON & CO., LLC
PORTLAND, ME

ACORN ENGINEERING INC

THIS PLAN SHALL NOT BE MODIFIED WITHOUT WRITTEN PERMISSION FROM ACORN ENGINEERING, INC. ANY MODIFICATIONS, WHETHER WRITTEN OR OTHERWISE, SHALL BE AT THE USER'S SOLE RISK AND WITHOUT LIABILITY TO ACORN ENGINEERING, INC.

ACORN ENGINEERING, INC.
158 DANFORTH STREET PORTLAND, MAINE 04102
(207) 775-2655

FILE:	1093_CIVIL
JN:	1093
SCALE:	NTS
DESIGNED BY:	WHS
DRAWN BY:	ADG
CHECKED BY:	WHS

STATE OF MAINE
WILLIAM H. SAVAGE
No. 11419
5-7-18
LICENSED
PROFESSIONAL ENGINEER

DRAWING NO.
C-40

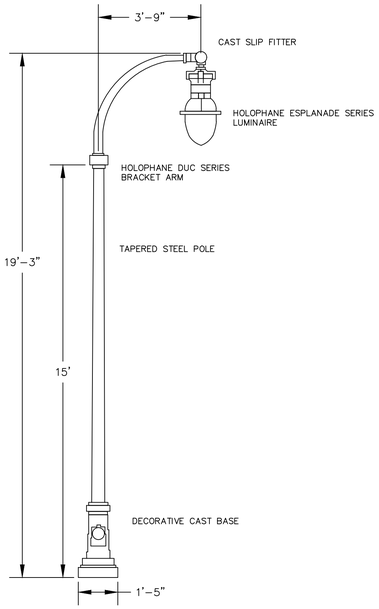

BAYSIDE DISTRICT MEDIUM SCALE LIGHT

NOT TO SCALE

NOTES:

1. LUMINAIRE
   HOLOPHANE LIGHTING MODEL ESU175MH12A4-PR CAST ALUMINUM HOUSING WITH STAINLESS STEEL HARDWARE. DROPPED REFRACTOR SHALL BE THERMAL RESISTANT BOROSILICATE GLASS. INTERNAL REFLECTOR AND PRISMATIC DIFFUSER SHALL PROVIDE AN IES TYPE III DISTRIBUTION PATTERN ACCORDING TO THE MANUFACTURER'S PHOTOMETRIC TEST # 47384. LUMINAIRE SHALL INCLUDE AN INTEGRAL BALLAST WITH MODULAR WIRING CONNECTORS AND MULTI-VOLTAGE TAPS (FACTORY WIRED FOR 120VAC). PROVIDE AN INFERNAL RECEPTACLE TYPE PHOTOCELL CONTROL.
2. LAMP
   HOLOPHANE LIGHTING MODEL OUC 4" BY 8" 6063-T6 ALUMINUM CORSSARM WITH A POST-TOP FITTING FOR A 3-TENON.
3. SLIP FITTER
   HOLOPHANE LIGHTING MODEL BHLF200-SCA/AS (BOSTON HARBOR SERIES) 2-3/8" O.D. WITH SWIVEL CAST FITTER.
4. LIGHTING POLE
   TAPERED STEEL PALE SHAFF RATED FOR A 90 MPH WIND LOAD WITH A 1.3 GUST FACTOR. POLE SHALL BE PRE-GALVANIZED. PROVIDE FOUR HOT-DIPPED GALVANIZED STEEL L-TYPE ANCHOR BOLTS.
5. DECORATIVE POLE BASE
   HOLOPHANE MODEL CAMBRIDGE SERIES CLAMSHELL CAST ALUMINUM BASE. HARDWARE SHALL BE STAINLESS STEEL
6. LIGHTS SHALL BE IN BLACK COLOR, LED 3000K.
7. BASE REVEAL SHALL BE 2"-4"

DEVELOPERS ARE RESPONSIBLE FOR PURCHASING AND INSTALLING ALL STREET LIGHTING, INCLUDING LIGHT POLES, BRACKETS, SLIP FITTERS, BASES AND ALL ELECTRICAL WIRING AND CONDUIT. THE NEW STREET LIGHTING SHALL BE CONNECTED TO EITHER AN EXISTING METERED SERVICE, UNLESS OTHERWISE DIRECTED BY THE CITY. ONCE INSTALLED AND OPERATIONAL, AND UPON ACCEPTANCE BY THE CITY, STREET LIGHTING LOCATED IN THE CITY RIGHT OF WAY SHALL BECOME THE PROPERTY OF THE CITY OF PORTLAND.

CONSTRUCTION CONTRACTOR RESPONSIBILITIES:

1. THE CONSTRUCTION CONTRACTOR SHALL FURNISH AND INSTALL AS PART OF THE CONSTRUCTION SCOPE STREET LIGHTING LUMINAIRES, STREET LIGHTING POLES, BRACKET ARMS, POLE ACCESSORIES, AND DECORATIVE BASE ENCLOSURES ALL AS STIPULATED BY THE CITY ACCORDING TO THE CITY STANDARDS FOR THE GIVEN PROJECT LOCATION.

2. THE CONSTRUCTION CONTRACTOR SHALL FURNISH AND INSTALL AS PART OF THE CONSTRUCTION SCOPE CONCRETE FOUNDATION BASES FOR NEW STREET LIGHTING POLES. POLES SHALL BE MOUNTED ON REINFORCED CONCRETE POLE BASES WITH AT LEAST 2" BUT NO MORE THAN 4" REVEAL ABOVE GRADE, WITH 4 BOLTS PER POLE. THE INSTALLATION OF THE FOUNDATION BASES SHALL BE COORDINATED WITH SIDEWALK DETAILS AND REQUIREMENTS AS STIPULATED BY THE CITY OF PORTLAND DEPARTMENT OF PUBLIC WORKS.

3. THE CONSTRUCTION CONTRACTOR SHALL FURNISH AND INSTALL AS PART OF THE CONSTRUCTION SCOPE UNDERGROUND CONDUIT AND WIRE BETWEEN STREET LIGHTING POLE FOUNDATION BASES. IN ADDITION, UNDERGROUND CONDUIT AND WIRE SHALL BE PROVIDED TO AN ELECTRICAL SERVICE PANELBOARD AND METER, AS WELL AS TO AN EXISTING POINT OF SERVICE CONNECTION.

4. THE CONSTRUCTION CONTRACTOR SHALL FURNISH AND INSTALL AS PART OF THE CONSTRUCTION SCOPE WIRING TO BE INSTALLED WITHIN EACH STREET LIGHTING POLE AND SHALL BE EXTENDED AT THE POLE TOP (OR BRACKET ARM), WITH CONNECTION TO THE STREET LIGHTING LUMINAIRE(S).

5. UPON COMPLETION OF THE ERECTION OF THE PROJECT STREET LIGHTING, INCLUDING THE INSTALLATION OF ALL LIGHTING POLES AND CONDUIT/WIRE, THE CONSTRUCTION CONTRACTOR SHALL NOTIFY THE CITY THAT THE SYSTEM IS READY FOR OPERATION. THE LUMINAIRES SHALL BE ENERGIZED PRIOR TO THE CONSTRUCTION CONTRACTOR'S REQUEST FOR A CITY CERTIFICATE OF OCCUPANCY.

6. IT SHALL BE THE CONSTRUCTION CONTRACTOR'S RESPONSIBILITY TO PAY ALL COSTS ASSOCIATED WITH THE PROVISION OF REQUIRED STREET LIGHTING INCLUDING COSTS ASSOCIATED WITH STREET LIGHTING LUMINAIRES, STREET LIGHTING POLES, BRACKETS, BASES, CONDUIT, AND WIRE, PANELBOARDS AND METERING EQUIPMENT.

CITY OF PORTLAND RESPONSIBILITIES:

1. TO APPROVE THE PROPOSED POINT OF CONNECTION FOR ELECTRICAL SERVICE FOR NEW MUNICIPAL STREET LIGHTING WHERE A NEW METERED SERVICE IS PROVIDED.

2. CONNECTION OF THE CONSTRUCTION CONTRACTOR'S SECONDARY SERVICE CONDUCTORS AT AN EXISTING SERVICE POINT, WHERE A NEW SERVICE IS PROVIDED.

3. TO REVIEW AND APPROVE THE LOCATION OF THE STREET LIGHT FIXTURES WITHIN THE PUBLIC RIGHT-OF-WAY.

1. NEW METERED SERVICES FOR LIGHT FIXTURES

2. ANY LIGHT FIXTURE INSTALLED IS NOT TO BE TIED TO THE EXISTING POWER UTILITY LEASED LIGHTING SYSTEM.

3. EACH NEW LIGHT FIXTURE IS TO BE PROVIDED WITH A NEMA 7-PIN RECEPTACLE FOR FUTURE CONNECTION TO THE CITY OF PORTLAND LIGHTING CONTROL SYSTEM.

4. EACH NEW LIGHT FIXTURE IS TO BE SPECIFIED WITH A COLOR TEMPERATURE OF 3000K.

5. THE DEVELOPER IS TO PROVIDE A NEW METERED ELECTRICAL SERVICE IN AN APX OUTDOOR RATED ENCLOSURE (SEE SECTION 10.3.1 FOR UNIT SPECIFICATION), PREVENTING ANY NEW FIXTURES FROM BEING DIRECTLY CONNECTED TO THE POWER UTILITY.

6. THE DEVELOPER WILL BE REQUIRED TO:

A) PROVIDE AN ASTRONOMICAL TIMECLOCK INSIDE THE ELECTRICAL ENCLOSURE (SEE SECTION 10.3.1 FOR UNIT SPECIFICATION) TO CONTROL LIGHT FIXTURES OR

B) PROVIDE A STANDARD PHOTOCELL FOR EACH FIXTURE, TO BE USED UNTIL LIGHTING CONTROL MODULE IS INSTALLED.

WIRING & ELECTRICAL

1. 2" INCH CONDUIT (MINIMUM) UNDERGROUND IN LIGHT POLE BASES AND CABINET BASE.

2. EACH LIGHT FUSED INDIVIDUALLY AT BASE FUSE HOLDER TYPE IS A (BUCHANAN 65 KIT CAT # 65U)

3. REGULAR OUTLET ON EACH POLE JUST BELOW THE FIXTURE TO BE FUSED AT THE BOTTOM OF THE POLE BASE WITH THE SAME FUSE KIT AS LISTED ABOVE.

4. SINGLE PHOTO CELL CONTROL FOR ALL LIGHTS SHALL BE IN THE CABINET, RATED FOR THE CIRCUIT. THIS MAY REQUIRE AN ALL-PURPOSE CONTACTOR.

5. WIRE SIZE AND CIRCUIT SIZE SHALL BE CALCULATED BY THE DESIGN ENGINEER AND INSPECTED BY THE CITY INSPECTOR TO MAKE SURE IT IS CORRECT. THIS WOULD BE DONE ON A CASE BY CASE BASIS BECAUSE NOT ALL CIRCUITS, LIGHTS AND SYSTEMS ARE THE SAME.

NOTES:

1. FLARED SECTIONS SHALL MATCH SURFACE MATERIAL USED FOR SIDEWALK CONSTRUCTION.

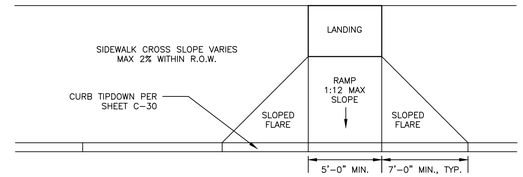

DESIGN ELEMENT	SLOPE IN DIRECTION OF TRAVEL	CROSS SLOPE
APPROACH	8.33% MAX	2%
LANDING	2%	2%
RAMP	8.33% MAX	MATCH STREET GRADE
FLARE	10% MAX AT CURB FACE	–
SIDEWALK	MATCH STREET GRADE	2%

TYPICAL SIDEWALK RAMP

NOT TO SCALE

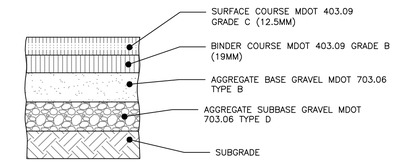

NOTE:
COMPACT SUBGRADE TO 95% MAXIMUM DRY DENSITY IN ACCORDANCE WITH ASTM D-1557

THICKNESS OF LAYERS	
STANDARD	LAYERS
1-1/2"	SURFACE COURSE MDOT 403.09 GRADE C (12.5mm)
2"	BINDER COURSE MDOT 403.09 GRADE B (19mm)
3"	AGGREGATE BASE GRAVEL MDOT 703.06 TYPE B
15"	AGGREGATE SUBBASE GRAVEL MDOT 703.06 TYPE D

BITUMINOUS PAVEMENT PROFILE: PARRIS, KENNEBEC, HANOVER

NOT TO SCALE

NOTES:

1. BICYCLE RACK SHALL HAVE CAPACITY FOR TWO BICYCLES.
2. BICYCLE RACK PARTS SHALL BE OF UNIFORM COLOR AND SHALL BE FINISHED IN ACCORDANCE WITH PRODUCT SPECIFICATION. PER CITY OF PORTLAND TECHNICAL STANDARDS ALL BIICYCLE RACKS WITHIN THE RIGHT-OF-WAY SHALL MATCH THE FURNITURE COLOR FOR THAT LOCATION AS DESCRIBED IN THE MUNICIPAL LIGHTING STANDARDS; IF NO DESIGNATED COLOR FOR THAT AREA EXISTS, BICYCLE RACKS SHALL BE BLACK.
3. BICYCLE RACK SHALL BE INSTALLED IN ACCORDANCE WITH MANUFACTURER'S MOST RECENT INSTALLATION RECOMMENDATIONS, AND SHALL BE INSTALLED WITH AN IN-GROUND MOUNT UNLESS OTHERWISE APPROVED BY ENGINEER.
4. BICYCLE RACK SHALL BE "DERO BIKE HITCH", AS MANUFACTURED BY DERO BIKE RACKS.
5. MINIMUM OFFSETS SHOWN. MANUFACTURER'S RECOMMENDED OFFSETS SHALL BE ENFORCED WHERE POSSIBLE.
6. MINIMUM DISTANCE BETWEEN BICYCLE RACKS SHALL BE 24". RECOMMENDED DISTANCE BETWEEN BICYCLE RACKS SHALL BE 38".
7. ALL OFFSETS ARE FROM OUTSIDE EDGES OF ITEMS.
8. CONCRETE SHALL BE 4000 PSI @28 DAYS. BOTTOM OF CONCRETE SHALL BE AT TOP OF SIDEWALK GRAVEL ELEVATION. DEPTH VARIES APRROX. 4"-7".
9. GRAVEL LAYER SHALL BE INSTALLED IN ACCORDANCE WITH BRICK SIDEWALK WITH BITUMINOUS BASE DETAIL, AND SHALL BE MAINEDOT 703.06 TYPE B.

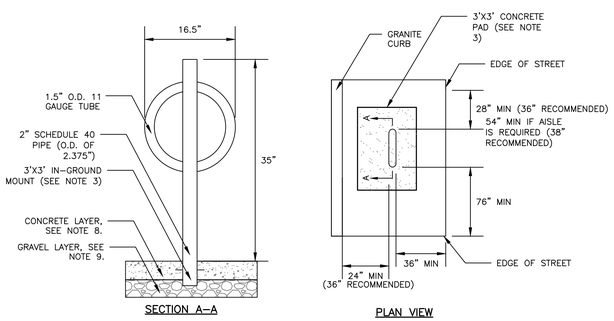

PUBLIC BICYCLE RACK DETAIL

NOT TO SCALE

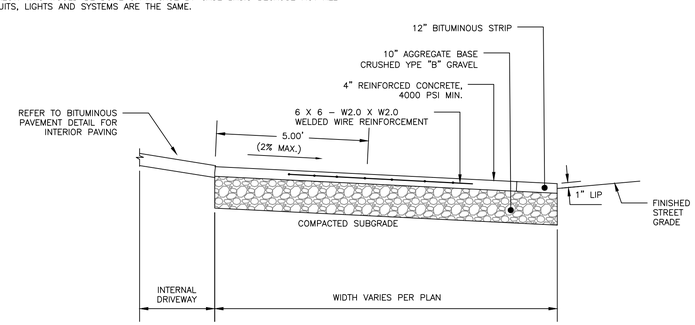

DRIVEWAY APRON DETAIL

NOT TO SCALE

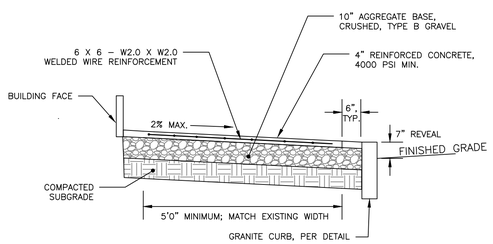

REINFORCED CONCRETE SIDEWALK

NOT TO SCALE

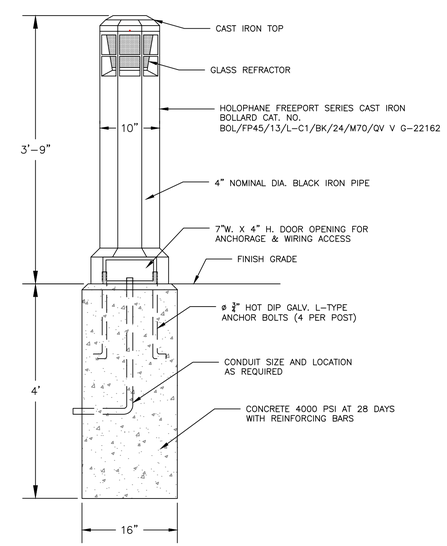

LIGHTED BOLLARD DETAIL

NOT TO SCALE

PRELIMINARY
NOT ISSUED FOR
CONSTRUCTION

ISSUED FOR	BY / DATE
CITY APP.	WHS 2/26/18
COMMENT RESPONSE	WHS 4/9/18
COMMENT RESPONSE 2	WHS 5/7/18
STAFF COMMENTS	WHS 5/11/18

DRAWING NAME: SITE DETAILS – 2

PROJECT NAME: 82 HANOVER STREET REDEVELOPMENT

CLIENT: TOM WATSON & CO., LLC
PORTLAND, ME

ACORN ENGINEERING, INC.
158 DANFORTH STREET PORTLAND, MAINE 04102
(207) 775-2655

THIS PLAN SHALL NOT BE MODIFIED WITHOUT WRITTEN PERMISSION FROM ACORN ENGINEERING, INC. ANY MODIFICATIONS, WHETHER WRITTEN OR OTHERWISE, SHALL BE AT THE USER'S SOLE RISK AND WITHOUT LIABILITY TO ACORN ENGINEERING, INC.

FILE:	1093_CIVIL
JN:	1093
SCALE:	NTS
DESIGNED BY:	WHS
DRAWN BY:	ADG
CHECKED BY:	WHS

STATE OF MAINE WILLIAM H. BAVAGE No. 11419 5-10-18 LICENSED PROFESSIONAL ENGINEER

DRAWING NO.
C-41

PLANTING NOTES:

1. ALL PLANT SELECTION AND INSTALLATION WILL BE IN COMPLIANCE WILL THE CITY OF PORTLAND TECHNICAL MANUAL (SECTION 4).
2. CONTRACTOR TO VERIFY ALL UTILITIES ON PROPERTY AND TO PROTECT ALL UTILITIES DURING EXCAVATION FOR PLANTS.
3. IF THERE IS A DISCREPANCY BETWEEN THE NUMBER OF PLANTS SHOWN ON THE PLAN AND THE NUMBER OF PLANTS SHOWN IN PLANT LIST (IF ANY), THE NUMBER OF PLANTS SHOWN ON PLAN WILL TAKE PRECEDENCE.
4. ALL MATERIAL SHALL COMPLY WITH THE LATEST EDITION OF THE AMERICAN STANDARD FOR NURSERY STOCK, AMERICAN ASSOCIATION OF NURSERYMAN.
5. THE ENGINEER MAY TAG ALL PLANTS AT THE NURSERY AND INSPECT THEM AFTER DELIVERY TO THE SITE. ALL PLANT MATERIALS SHALL BE INSPECTED BY THE ENGINEER ON SITE PRIOR TO INSTALLATION.
6. ALL PROPOSED PLANTS SHALL BE LOCATED CAREFULLY AS SHOWN ON THE PLANS AND THE PLACEMENTS SHALL BE APPROVED BY ENGINEER BEFORE THE PLANTS ARE INSTALLED.
7. ALL DISTURBED AREAS NOT TO BE PAVED OR PLANTED SHALL BE LOAMED AND SEEDED AS SHOWN. THE SEED MIX SPECIFICATIONS ARE AS FOLLOWS: LESCO FINE FESCUE LINKS BLEND OF 35% HARD FESCUE, 35% CREEPING RED FESCUE, 20% CHEWINGS FESCUE AND 10% SHEEP FESCUE. ADD 5% LITTLE BLUESTEM AND 5% NORTHEAST WILDFLOWER SEED MIXTURE BY WEIGHT TO THE LINKS BLEND.
8. STAKING AND GUYING SHALL BE DETERMINED BY THE ENGINEER ON A TREE BY TREE BASIS. FOR PRICING PURPOSES, PROVIDE A PER TREE UNIT COST FOR STAKING AND GUYING. IF STAKING AND GUYING IS REQUIRED, REMOVE TREE WRAP, STAKES, AND GUY WIRES AT END OF FIRST GROWING SEASON.
9. FOR TREE PLANTING IN LAWN AREAS, ANY DISTURBED LAWN SHALL BE LOAMED AND SEEDED AS NECESSARY.

NOTES:

1. DIG HOLE AT LEAST 2 TIMES THE DIAMETER OF THE ROOT BALL AND AS DEEP AS THE ROOT BALL (NO DEEPER). SET ROOT BALL CENTERED, WITH THE TOP AT DOWNHILL EDGE OF THE HOLE.
2. TOPSOIL BACKFILL SHALL BE NATURAL FRIABLE, FERTILE, FINE LOAMY SOIL POSSESSING THE CHARACTERISTICS OF TOPSOIL IN THE VICINITY WHICH PRODUCE A HEAVY GROWTH. TOPSOIL SHALL CONTAIN NOT LESS THAN 6% NOR MORE THAN 20% ORGANIC MATTER. TOP SOIL SHALL HAVE A pH VALUE OF NOT LESS THAN 5.5 NOR MORE THAN 7.0.
3. CONTAINER GROWN STOCK – REMOVE CONTAINER PROTECTING THE ROOT BALL. GENTLY COMB OUT THE ROOTS. PRUNE DAMAGED ROOTS.
4. BACKFILL THE HOLE WITH TOPSOIL TO A DEPTH NOT TO EXCEED 8" THEN WATER SUFFICIENTLY TO SETTLE TOPSOIL. REPEAT SOIL BACKFILL, WATER, DRAIN. TOPSOIL SHALL BE TAMPED UNDER EDGES OF THE BALLED PLANTS. BACKFILL TO FINISH GRADE AND CREATE AN EARTHEN SAUCER. SOAK PLANTS TWICE WITHIN THE FIRST TWENTY-FOUR HOURS OF PLANTING.

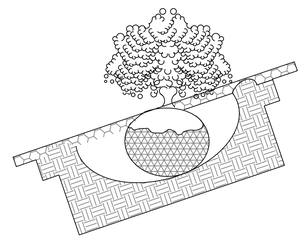

TYPICAL PLANTING
NOT TO SCALE

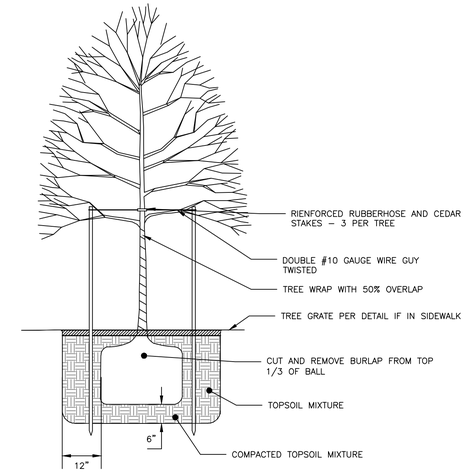

TREE PLANTING DETAIL
NOT TO SCALE

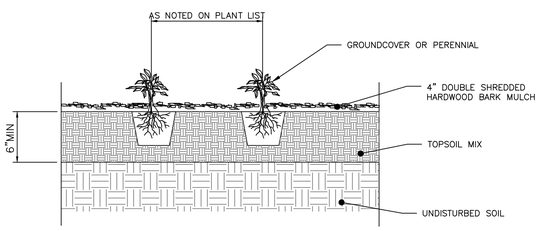

PERENNIAL PLANTING DETAIL
NOT TO SCALE

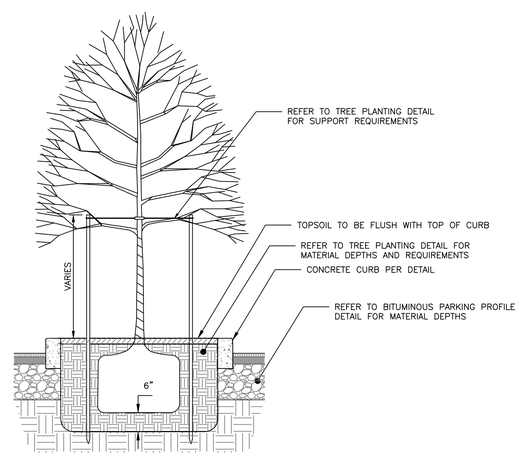

SECTION VIEW

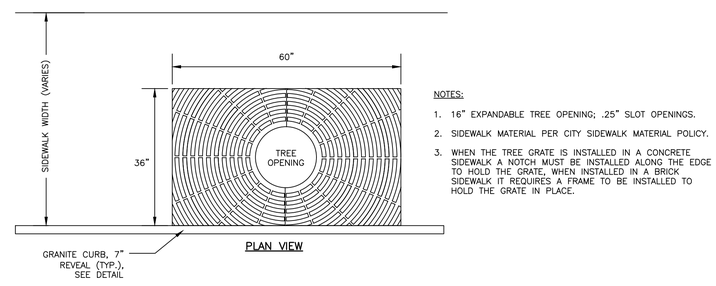

PLAN VIEW

NOTES:

1. 16" EXPANDABLE TREE OPENING; .25" SLOT OPENINGS.
2. SIDEWALK MATERIAL PER CITY SIDEWALK MATERIAL POLICY.
3. WHEN THE TREE GRATE IS INSTALLED IN A CONCRETE SIDEWALK A NOTCH MUST BE INSTALLED ALONG THE EDGE TO HOLD THE GRATE, WHEN INSTALLED IN A BRICK SIDEWALK IT REQUIRES A FRAME TO BE INSTALLED TO HOLD THE GRATE IN PLACE.

EXPANDABLE TREE GRATE
NEENAH MODEL R-8810
NOT TO SCALE

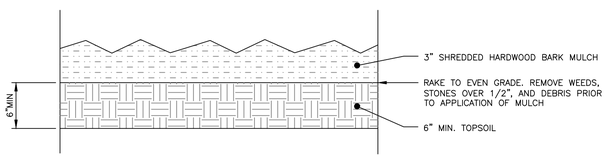

BARK MULCH DETAIL
NOT TO SCALE

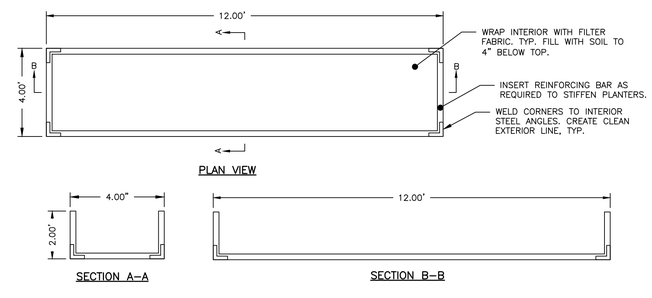

WEATHERING STEEL PLANTER BOX
NOT TO SCALE

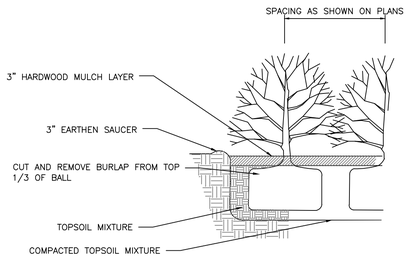

SHRUB PLANTING DETAIL
NOT TO SCALE

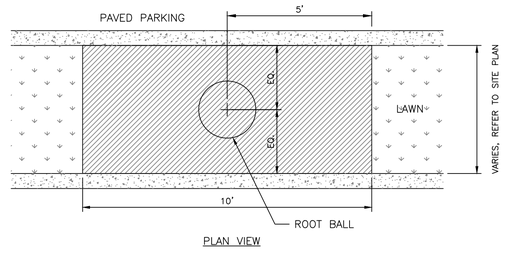

PLAN VIEW

TREE PLANTING IN PARKING ISLAND DETAIL
NOT TO SCALE

PRELIMINARY
NOT ISSUED FOR CONSTRUCTION

ISSUED FOR	BY	DATE
CITY APP.	WHS	2/26/18
COMMENT RESPONSE	WHS	4/9/18

DRAWING NAME: LANDSCAPING DETAILS

PROJECT NAME: 82 HANOVER STREET REDEVELOPMENT

CLIENT: TOM WATSON & CO., LLC
PORTLAND, ME

ACORN ENGINEERING, INC.

THIS PLAN SHALL NOT BE MODIFIED WITHOUT WRITTEN PERMISSION FROM ACORN ENGINEERING, INC. ANY MODIFICATIONS MADE WITHOUT PERMISSION OR OTHERWISE, SHALL BE AT THE USER'S SOLE RISK AND WITHOUT LIABILITY TO ACORN ENGINEERING, INC.

ACORN ENGINEERING, INC.
158 DANFORTH ST. PORTLAND, MAINE 04102
(207) 775-2655

FILE:	1093_CIVIL
JN:	1093
SCALE:	NTS
DESIGNED BY:	WHS
DRAWN BY:	ADG
CHECKED BY:	WHS

STATE OF MAINE WILLIAM SAVAGE No. 7449 4-9-18 PROFESSIONAL ENGINEER

DRAWING NO.
C-42

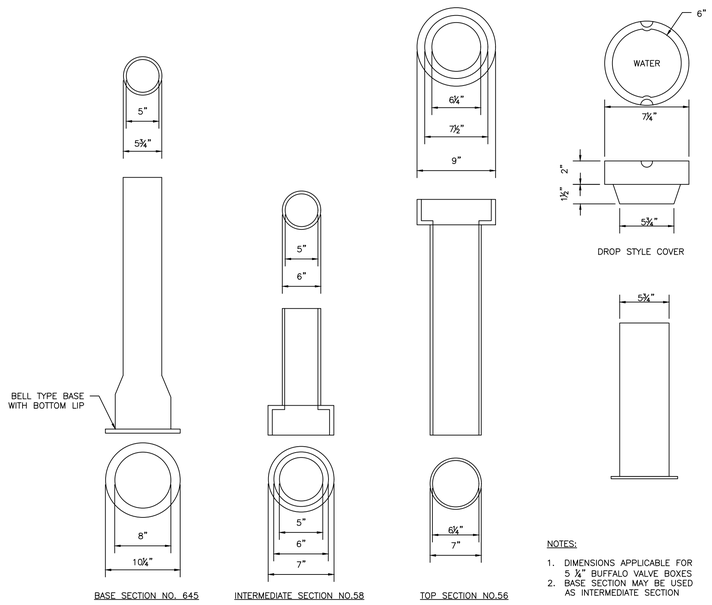

NOTES:

1. DIMENSIONS APPLICABLE FOR 5 ¼" BUFFALO VALVE BOXES
2. BASE SECTION MAY BE USED AS INTERMEDIATE SECTION

VALVE BOX & COVER

NOT TO SCALE

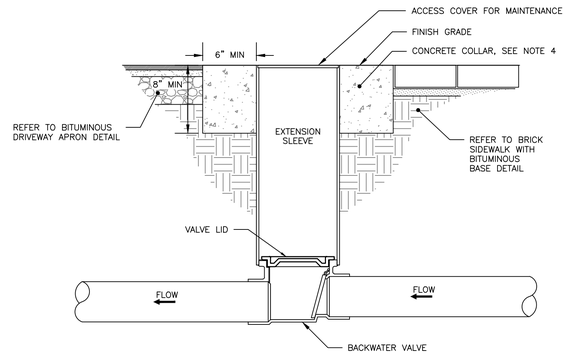

NOTES:

1. BACKFLOW VALVE TO BE PROVIDED BY AGRI DRAIN CORPORATION OR AN APPROVED EQUAL.
2. VALVE TO BE INSTALLED TO MANUFACTURER'S SPECIFICATIONS AND COMPLY WITH RULES AND REGULATIONS AS OUTLINED IN SECTION 2 OF THE CITY OF PORTLAND TECHNICAL MANUAL.
3. VALVE SHALL BE INSTALLED WITH A VALVE BOX AND COVER TO PROVIDE EASY ACCESS AND MAINTENANCE; VALVE COVER SHALL STATE 'SEWER' ON LID FLUSH TO SURFACE. REFER TO VALVE & BOX COVER DETAIL FOR ADDITIONAL INFORMATION.
4. CONCRETE COLLAR AT A MINIMUM 24-HOUR COMPRESSIVE STRENGTH OF 3,000 PSI.

BACKFLOW VALVE ASSEMBLY

NOT TO SCALE

DESIGN NOTES:

1. ANY ALTERNATE TRENCHING METHODS SHALL BE APPROVED IN ADVANCE BY THE CITY.
2. ALL CONSTRUCTION METHODS SHALL CONFORM TO THE CITY OF PORTLAND TECHNICAL STANDARDS FIGURE II-2.
3. BRACING & SHEETING OR OTHER TRENCH PROTECTION TO BE PROVIDED TO MEET APPLICABLE STATE AND O.S.H.A SAFETY STANDARDS. ALL SUCH TRENCH PROTECTION SHALL BE THE RESPONSIBILITY OF THE CONTRACTOR.
4. WHERE APPLICABLE, PERFORATIONS IN STORM DRAIN (PERF. SD) SHALL BE ORIENTED UP.
5. ALL STORM DRAINS SHALL BE PVC SDR 35 MIN PS-46 RATING OR OR IN ACCORDANCE WITH CITY OF PORTLAND TECHNICAL MANUAL , SECTION 2 – SANITARY SEWER AND STORM DRAIN – PART 2.5.2
6. IN PAVED AREAS, DEPTHS OF GRAVEL AND HOT MIX ASPHALT PAVEMENT SHALL MATCH THE GREATER OF EXISTING CONDITIONS OR THE REQUIREMENTS FOR THE CORRESPONDING STREET CLASSIFICATION.
7. THIS DETAIL SHALL BE APPLIED ONLY TO PIPE TRENCHES WITHIN OF THE CITY OF PORTLAND R.O.W.
8. STORM DRAIN COVER BETWEEN 2' AND 3' SHALL INCLUDE 4" OF RIGID INSULATION. COVER BETWEEN 3' AND 4' SHALL INCLUDE 2" RIGID INSULATION. OTHER UTILITIES: ADD 2" OF RIGID INSULATION FOR EACH FOOT ABOVE MINIMUM DEPTH.
9. DEPTH OF BITUMINOUS PAVEMENT AND AGGREGATE COURSES SHALL BE DETERMINED BY STREET CLASSIFICATION.
10. DIMENSION B SHALL BE SUFFICIENT TO ALLOW CRUSHED STONE BEDDING TO BE PLACED AND COMPACTED UNDER THE HAUNCHES OF THE PIPE; BUT IN ALL CASES DIMENSION B SHALL BE AT LEAST 9".
11. DIMENSION A IS THE MAXIMUM WIDTH ALLOWED FOR CALCULATING PAY QUANTITIES UNDER GRANULAR BORROW, CRUSHED STONE, STRUCTURAL EARTH EXCAVATION, AND STRUCTURAL ROCK EXCAVATION. DIMENSION A SHALL BE BASED ON PIPE DIAMETER D, AS SET FORTH IN THE TABLE BELOW.

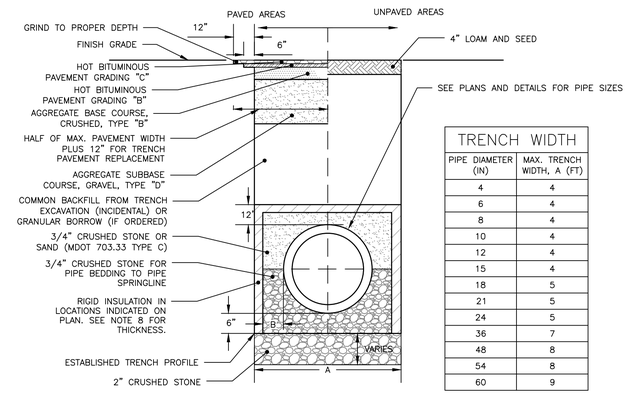

TRENCH WIDTH	
PIPE DIAMETER (IN)	MAX. TRENCH WIDTH, A (FT)
4	4
6	4
8	4
10	4
12	4
15	4
18	5
21	5
24	5
36	7
48	8
54	8
60	9

CITY OF PORTLAND TYPICAL PIPE TRENCH DETAIL WITHIN RIGHT-OF-WAY

NOT TO SCALE

NOTES:

1. ALL MATERIALS AND INSTALLATION PROCEDURES MUST COMPLY WITH THE CITY OF PORTLAND WATER DISTRICT (PWD) SPECIFICATIONS.
2. CURB STOP BALL VALVE TO BE MADE OF COPPER OR BRASS UNLESS OTHERWISE NOTED BY THE PORTLAND WATER DISTRICT.
3. SERVICE LINE TO BE MADE OF TYPE K COPPER.
4. CONCRETE BLOCKING SHALL BE ADDED TO THE BASE OF THE CURB STOP TO PROVIDE STRUCTURAL SUPPORT FOR THE CURB STOP AND SERVICE BOX.

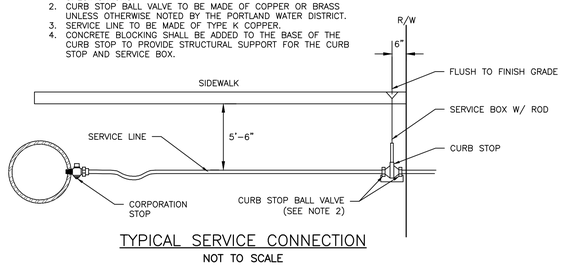

TYPICAL SERVICE CONNECTION

NOT TO SCALE

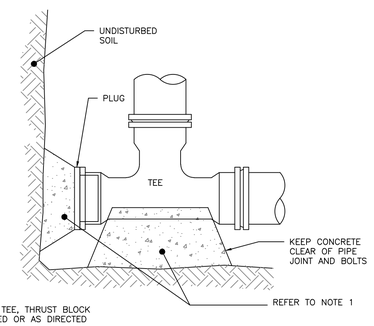

NOTES:

1. IF DEAD END WITH TEE, THRUST BLOCK WOULD BE REQUIRED OR AS DIRECTED BY THE ENGINEER
2. SEE THRUST/RETAINER GLAND SCHEDULE FOR TYPE OF BLOCKING TO BE USED ON BENDS

END SECTION

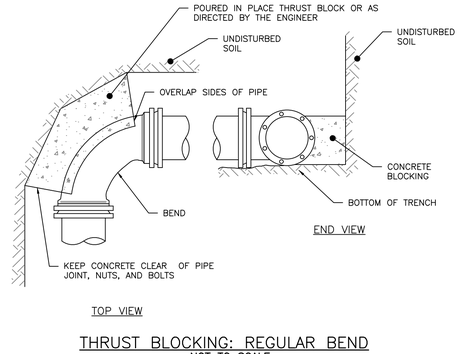

THRUST BLOCKING: REGULAR BEND

NOT TO SCALE

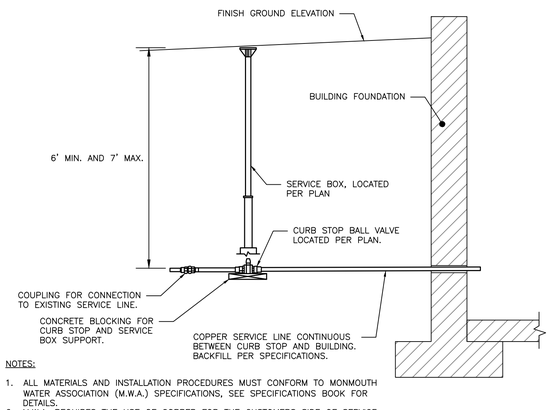

NOTES:

1. ALL MATERIALS AND INSTALLATION PROCEDURES MUST CONFORM TO MONMOUTH WATER ASSOCIATION (M.W.A.) SPECIFICATIONS, SEE SPECIFICATIONS BOOK FOR DETAILS.
2. M.W.A. REQUIRES THE USE OF COPPER FOR THE CUSTOMERS SIDE OF SERVICE.
3. CUSTOMERS PORTION OF SERVICE LINE IS THAT PORTION FROM THE PROPERTY LINE INTO THE BUILDING, IN THIS INSTANCE THE CUSTOMER IS ALSO RESPONSIBLE FOR THE INSTALLATION OF THE CURB STOP BALL VALVE.
4. FOR THE INTERIOR BUILDING PLUMBING REFER TO THE PLUMPING PLAN BY MECHANICAL SYSTEMS ENGINEERS.

SERVICE INSTALLATION DETAIL

NOT TO SCALE

PRELIMINARY
NOT ISSUED FOR
CONSTRUCTION

ISSUED FOR	BY	DATE
CITY APP.	WHS	2/20/18

DRAWING NAME: UTILITY DETAILS – 1

PROJECT NAME: 82 HANOVER STREET REDEVELOPMENT

CLIENT: TOM WATSON & CO., LLC
PORTLAND, ME

ACORN ENGINEERING, INC.

THIS PLAN SHALL NOT BE MODIFIED WITHOUT WRITTEN PERMISSION FROM ACORN ENGINEERING, INC. ANY MODIFICATIONS, WHETHER INTENTIONAL OR OTHERWISE, SHALL BE AT THE USER'S SOLE RISK AND WITHOUT LIABILITY TO ACORN ENGINEERING, INC.

ACORN ENGINEERING, INC.
158 DANFORTH ST PORTLAND, MAINE 04102
(207) 775-2655

FILE:	1093_CIVIL
JN:	1093
SCALE:	NTS
DESIGNED BY:	WHS
DRAWN BY:	ADG
CHECKED BY:	WHS

STATE OF MAINE
WILLIAM H. SAVAGE
No. 11615
2-20-18
LICENSED
PROFESSIONAL ENGINEER

DRAWING NO.
C-43

NOTES:

1. LOCATION WITH WARNING TAPE SHALL BE INSTALLED OVER CENTERLINE OF PIPE AT A MAXIMUM OF 24 INCHES BELOW FINISH GRADE.
2. SITE CONTRACTOR TO COORDINATE CONNECTION OF SEWER LATERAL TO HOUSEHOLD PLUMBING WITH ARCHITECTURAL CONTRACTOR.
3. CONNECTION OF PROPOSED SEWER LATERAL TO HOUSEHOLD PLUMBING SHOULD INCORPORATE USE OF SIMILAR PIPE MATERIALS. IN THE CASE OF DISSIMILAR PIPES BEING USED, A FERNCO FLEXIBLE COUPLING SHALL BE USED.

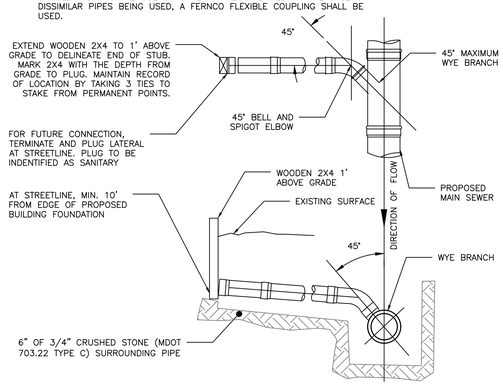

SEWER TEE/WYE CONNECTION DETAIL

NOT TO SCALE

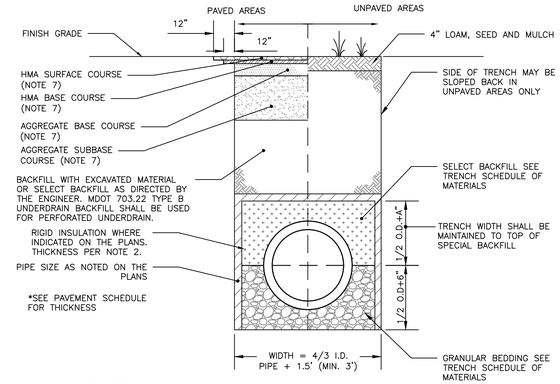

ALLOWABLE PIPE MATERIALS:

- REINFORCED CONCRETE PIPE (RCP) MIN. STRENGTH OF CLASS III
- PVC RING TYPE SEWER (SDR 35) OR EQUIVALENT, MIN PS-46 RATING
- PVC RING TYPE SEWER PIPE MEETING ASTM F 789
- DUCTILE IRON PIPE (DIP)
- ADS N-12 HP TRIPLE-WALL MIN PS-46 RATING
- ADS SANITITE HP MIN. PS-46

SCHEDULE OF MATERIALS		
TYPE OF PIPE	GRANULAR BEDDING	SELECT BACKFILL
CMP DUCTILE IRON RCP	MDOT 703.22 TYPE B UD BACKFILL	MDOT 703.22 TYPE B UD BACKFILL
PVC/HDPE	MDOT 703.22 TYPE C 3/4" CRUSHED STONE	MDOT 703.22 TYPE B UD BACKFILL
CMP	MDOT 703.22 TYPE C 3/4" CRUSHED STONE	MDOT 703.22 TYPE C 3/4" CRUSHED STONE

NOTES:

1. BRACING AND SHEETING OR OTHER TRENCH PROTECTION TO BE PROVIDED TO MEET APPLICABLE STATE AND O.S.H.A. SAFETY STANDARDS. ALL SUCH TRENCH PROTECTION TO BE THE RESPONSIBILITY OF THE CONTRACTOR.
2. STORM DRAIN COVER BETWEEN 2' AND 3' SHALL INCLUDE 4" OF RIGID INSULATION. COVER BETWEEN 3' AND 4' SHALL INCLUDE 2" RIGID INSULATION. OTHER UTILITIES: ADD 2" OF RIGID INSULATION FOR EACH FOOT ABOVE MINIMUM DEPTH.
3. INSTALL WARNING TAPE DIRECTLY ABOVE UTILITIES AT THE TOP OF SUBGRADE.
4. MINIMUM COVER
   4.1. 2'-0" – STORM DRAIN
   4.2. 5'-0" – SEWER
5. NO TREES SHALL BE PLANTED WITHIN 5' OF A SEWER PIPE OR SERVICE
6. THIS DETAIL SHALL BE APPLIED ONLY TO DRAINAGE PIPE TRENCHES OUTSIDE OF THE CITY OF PORTLAND ROW.
7. THICKNESS AS NOTED BY SURFACE DETAILS
8. ALL PROPOSED TREES PLANTED WITHIN 10' OF A STORM OR SEWER PIPE SHALL BE PLANTED AT A DEPTH NO GREATER THAN 3' DEEP. PERMEABLE LANDSCAPE FABRIC SHALL CREATE A ROOT BARRIER AROUND THE PIPES. CONTRACTOR SHALL COORDINATE WITH THE LANDSCAPE DRAWINGS.

STORM DRAIN AND SEWER TYPICAL TRENCH SECTION WITHIN PROPERTY

NOT TO SCALE

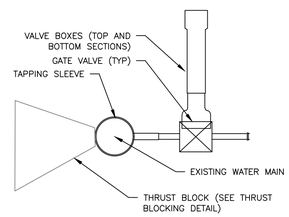

SIDE VIEW

TAPPING SLEEVE AND VALVE

NOT TO SCALE

NOTES:

1. THE WATER TRENCH SHALL BE CONSTRUCTED IN ACCORDANCE WITH THE PORTLAND WATER DISTRICT STANDARD DETAILS & SPECIFICATIONS.
2. IF LESS THAN 5'-6" OF COVER IS POSSIBLE ADD 1 INCH OF "BLUE DOW" RIGID INSULATION FOR EVERY 12" LESS COVER.
3. ALL PROPOSED TREES PLANTED LESS THAN 10 FEET FROM THE WATER PIPE SHALL BE PLANTED AT A DEPTH NO GREATER THAN 3' DEEP. PERMEABLE LANDSCAPE FABRIC SHALL CREATE A ROOT BARRIER AROUND THE WATER PIPES. CONTRACTOR SHALL COORDINATE WITH THE LANDSCAPE DRAWINGS.

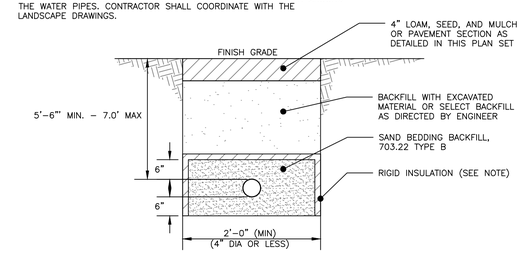

WATER SERVICE TRENCH SECTION DETAIL

NOT TO SCALE

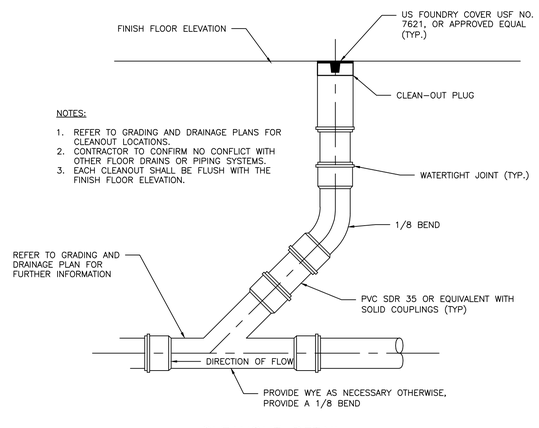

NOTES:

1. REFER TO GRADING AND DRAINAGE PLANS FOR CLEANOUT LOCATIONS.
2. CONTRACTOR TO CONFIRM NO CONFLICT WITH OTHER FLOOR DRAINS OR PIPING SYSTEMS.
3. EACH CLEANOUT SHALL BE FLUSH WITH THE FINISH FLOOR ELEVATION.

CLEANOUT DETAIL

NOT TO SCALE

PRELIMINARY
NOT ISSUED FOR CONSTRUCTION

ISSUED FOR	BY	DATE
CITY APP.	WHS	2/20/18

DRAWING NAME: UTILITY DETAILS – 2

PROJECT NAME: 82 HANOVER STREET REDEVELOPMENT

CLIENT: TOM WATSON & CO., LLC
PORTLAND, ME

ACORN ENGINEERING, INC.

THIS PLAN SHALL NOT BE MODIFIED WITHOUT WRITTEN PERMISSION FROM ACORN ENGINEERING, INC. ANY MODIFICATIONS MADE WITHOUT OR OTHERWISE, SHALL BE AT THE USER'S SOLE RISK AND WITHOUT LIABILITY TO ACORN ENGINEERING, INC.

ACORN ENGINEERING, INC.
158 DANFORTH STREET, PORTLAND, MAINE 04102
(207) 775-2655

FILE:	1093_CIVIL
JN:	1093
SCALE:	NTS
DESIGNED BY:	WHS
DRAWN BY:	ADG
CHECKED BY:	WHS

STATE OF MAINE
WILLIAM H. SAVAGE
No. 11416
2-20-18
LICENSED
PROFESSIONAL ENGINEER

DRAWING NO.
C-44

NOTES:

1. APPROVED CATCH BASIN FRAMES:
   1.1. EAST JORDAN = 7375Z
   1.2. NEENAH = R-3248
   1.3. OR APPROVED EQUAL
2. APPROVED CATCH BASIN GRATES
   2.1. EAST JORDAN = 2440M
   2.2. NEENAH = R-3248
   2.3. OR APPROVED EQUAL

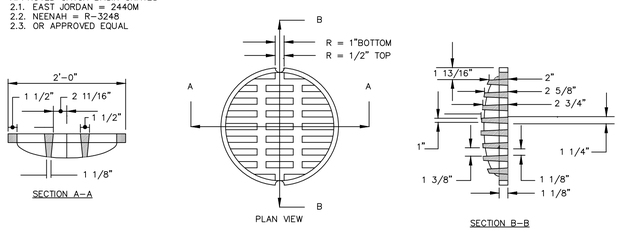

GRATE DETAIL

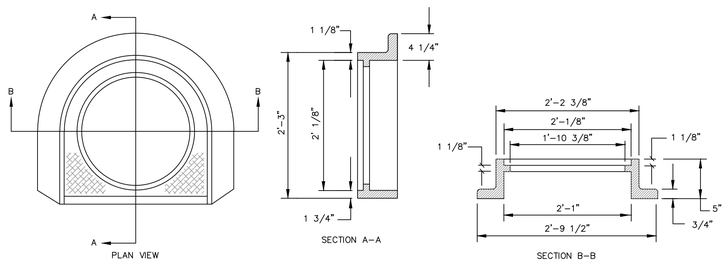

FRAME DETAIL

CATCH BASIN FRAME & GRATE
NOT TO SCALE

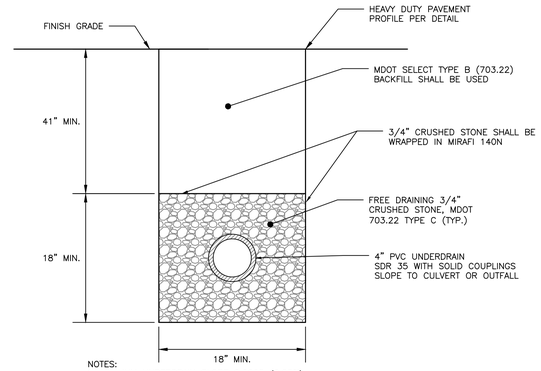

NOTES:
1. MINIMUM UNDERDRAIN SLOPE 0.0025 (0.25%)
2. PERFORATIONS IN UNDERDRAIN PIPE SHALL BE ORIENTED DOWN.

UNDERDRAIN DETAIL
NOT TO SCALE

GENERAL NOTES FOR MANHOLES AND CATCH BASINS

1. ALL CONCRETE SHALL HAVE A MINIMUM ULTIMATE COMPRESSIVE STRENGTH OF 4000 lbs. PER SQ. INCH AT THE END OF 28 DAYS, UNLESS OTHERWISE NOTED.
2. MANHOLES MAY BE CONSTRUCTED OF PRECAST REINFORCED CONCRETE, OR CAST IN PLACE.
3. PRECAST REINFORCED CONE BARREL MANUFACTURED PER ASTM SPEC. C-478.
4. ALL STORM AND SEWER MANHOLE COVERS SHALL BE SOLD AND SHALL HAVE ONE ¾" DIAMETER DRILLED PICK HOLE LOCATED 8" FROM THE CENTER OF THE COVER.
5. ALL SANITARY MANHOLE COVERS SHALL HAVE "SEWER" CAST INTO THE COVER. ALL STORMWATER/DRAIN MANHOLE COVERS SHALL HAVE "DRAIN" CAST INTO THE COVER.
6. ALL MANHOLE RISERS SHALL BE ETHERIDGE 24" OR APPROVAL EQUAL.
7. SEWER BRICK SHALL CONFORM TO ASTM SPEC. DESIGNATE ON C-32-63, GRADE MA AND SA.
8. ALL SANITARY MANHOLES SHALL HAVE A WATERPROFFING COATING APPLIED TO THE EXTERIOR SURFACE.
9. CATCH BASIN FRAMES FOR TYPE A4 CATCH BASIN CURB INLETS SHALL BE ETHERIDGE DR5A OR APPROVED EQUAL.
10. CASTINGS SHALL CONFORM TO ASTM DESIGNATION A48-CLASS 35.
11. EXISTING MANHOLES, CATCH BASINS, FRAMES, AND COVERS SHALL BE SALVAGED BY THE CONTRACTOR, AND SHALL REMAIN THE PROPERTY OF THE CITY OF PORTLAND.

NOTES:

1. INSTALL CATCH BASIN HOODS IN ALL CATCH BASINS WITH A 12" OR 15" OUTLET PIPE.
2. PREFERRED STYLE DESIGNED TO ELIMINATE CEMENTING OF THE TRAP.
3. REFER TO MANUFACTURER'S RECOMMENDATIONS FOR INSTALLATION REQUIREMENTS

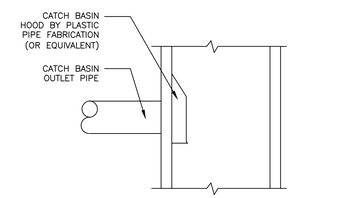

CATCH BASIN HOOD DETAIL
NOT TO SCALE

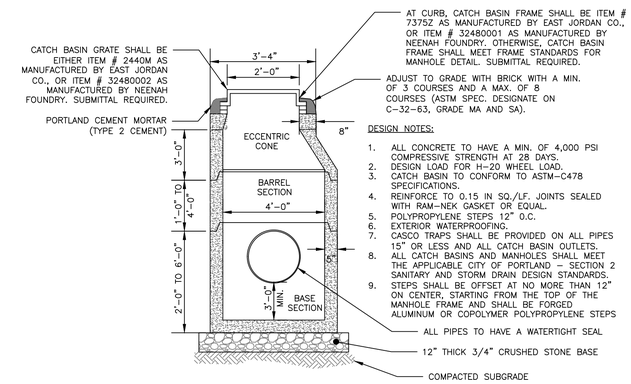

DESIGN NOTES:

1. ALL CONCRETE TO HAVE A MIN. OF 4,000 PSI COMPRESSIVE STRENGTH AT 28 DAYS.
2. DESIGN LOAD FOR H-20 WHEEL LOAD.
3. CATCH BASIN TO CONFORM TO ASTM-C478 SPECIFICATIONS.
4. REINFORCE TO 0.15 IN SQ./LF. JOINTS SEALED WITH RAM-NEK GASKET OR EQUAL.
5. POLYPROPYLENE STEPS 12" O.C.
6. EXTERIOR WATERPROOFING.
7. CASCO TRAPS SHALL BE PROVIDED ON ALL PIPES 15" OR LESS AND ALL CATCH BASIN OUTLETS. ALL CATCH BASINS AND MANHOLES SHALL MEET THE APPLICABLE CITY OF PORTLAND – SECTION 2 SANITARY AND STORM DRAIN DESIGN STANDARDS.
8. STEPS SHALL BE OFFSET AT NO MORE THAN 12" ON CENTER, STARTING FROM THE TOP OF THE MANHOLE FRAME AND SHALL BE FORGED ALUMINUM OR COPOLYMER POLYPROPYLENE STEPS

4'-0" DIAMETER PRECAST CATCH BASIN/MANHOLE
NOT TO SCALE

PRELIMINARY
NOT ISSUED FOR
CONSTRUCTION

ISSUED FOR	BY / DATE
CITY APP.	WHS 2/26/18
COMMENT RESPONSE	WHS 4/9/18

DRAWING NAME: DRAINAGE DETAILS

PROJECT NAME: 82 HANOVER STREET REDEVELOPMENT

CLIENT: TOM WATSON & CO., LLC
PORTLAND, ME

ACORN ENGINEERING, INC.
158 DANFORTH ST PORTLAND MAINE 04102
(207) 775-2655

THIS PLAN SHALL NOT BE MODIFIED WITHOUT WRITTEN PERMISSION FROM ACORN ENGINEERING, INC. ANY MODIFICATIONS MADE BY OTHERS, OR OTHERWISE, SHALL BE AT THE USER'S SOLE RISK AND WITHOUT LIABILITY TO ACORN ENGINEERING, INC.

FILE:	1093_CIVIL
JN:	1093
SCALE:	NTS
DESIGNED BY:	WHS
DRAWN BY:	ADG
CHECKED BY:	WHS

STATE OF MAINE WILLIAM H. SAVAGE No. 11418 4-9-18 PROFESSIONAL ENGINEER

DRAWING NO.
C-45

1.0 EROSION CONTROL MEASURES AND SITE STABILIZATION

AS PART OF THE SITE DEVELOPMENT, THE FOLLOWING TEMPORARY AND PERMANENT EROSION AND SEDIMENTATION CONTROL DEVICES SHALL BE IMPLEMENTED. DEVICES SHALL BE INSTALLED AS DESCRIBED IN THIS REPORT OR WITHIN THE PLAN SET. SEE THE MAINE EROSION AND SEDIMENT CONTROL HANDBOOK FOR CONSTRUCTION: BEST MANAGEMENT PRACTICES FOR FURTHER REFERENCE.

1.1 TEMPORARY EROSION CONTROL MEASURES

THE FOLLOWING TEMPORARY EROSION AND SEDIMENTATION CONTROL MEASURES ARE PLANNED FOR THE PROJECT'S CONSTRUCTION PERIOD:

1.1.1 CRUSHED STONE STABILIZED CONSTRUCTION ENTRANCES SHALL BE PLACED AT ALL ACCESS POINTS TO THE PROJECT SITE WHERE THERE ARE DISTURBED AREAS. THE FOLLOWING SPECIFICATIONS SHALL BE FOLLOWED AT A MINIMUM:
- STONE SIZE SHALL BE 2–3 INCHES, OR RECLAIMED OR RECYCLED CONCRETE EQUIVALENT.
- THE THICKNESS OF THE ENTRANCE STONE LAYER SHALL BE NO LESS THAN 6 INCHES.
- THE ENTRANCE SHALL NOT BE LESS THAN 20 FEET WIDE, HOWEVER NOT LESS THAN THE FULL WIDTH OF POINTS WHERE INGRESS OR EGRESS OCCURS. THE LENGTH SHALL NOT BE LESS THAN 50 FEET IN LENGTH.
- GEOTEXTILE FABRIC (WOVEN OR NON–WOVEN) SHALL BE PLACED OVER THE ENTIRE ENTRANCE AREA.
- THE ENTRANCE/EXIT SHALL BE MAINTAINED TO THE EXTENT THAT IT WILL PREVENT THE TRACKING OF SEDIMENT ONTO PUBLIC ROAD WAYS.

1.1.2 SILTATION FENCE OR EROSION CONTROL BERM SHALL BE INSTALLED DOWN GRADIENT OF ANY DISTURBED AREAS TO TRAP RUNOFF BORNE SEDIMENTS UNTIL PERMANENT STABILIZATION IS ACHIEVED. THE SILT FENCE OR EROSION CONTROL BERM SHALL BE INSTALLED PER THE DETAILS PROVIDED IN THE PLAN SET AND INSPECTED BEFORE AND IMMEDIATELY AFTER EACH RAINFALL AND AT LEAST DAILY DURING PROLONGED RAINFALL. REPAIRS SHALL BE MADE IF THERE ARE ANY SIGNS OF EROSION OR SEDIMENTATION BELOW THE FENCE LINE OR BERM. IF THERE ARE SIGNS OF UNDERCUTTING AT THE CENTER OR THE EDGES, OR IMPOUNDING OF LARGE VOLUMES OF WATER BEHIND THE FENCE OR BERM, THE BARRIER SHALL BE REPLACED WITH A STONE CHECK DAM.

1.1.3 HAY MULCH INCLUDING HYDRO SEEDING IS INTENDED TO PROVIDE COVER FOR DENUDED OR SEEDED AREAS UNTIL REVEGETATION IS ESTABLISHED. MULCH PLACED BETWEEN APRIL 15TH AND NOVEMBER 1ST ON SLOPES OF LESS THAN 15 PERCENT SHALL BE COVERED BY FABRIC NETTING AND ANCHORED WITH STAPLES IN ACCORDANCE WITH THE MANUFACTURER'S RECOMMENDATION. MULCH PLACED BETWEEN NOVEMBER 1ST AND APRIL 15TH ON SLOPES EQUAL TO OR STEEPER THAN 8 PERCENT AND EQUAL TO OR FLATTER THAN 2:1 SHALL USE MATS OR FABRIC NETTING AND ANCHORED WITH STAPLES IN ACCORDANCE WITH THE MANUFACTURER'S RECOMMENDATION.

1.1.4 AT ANY TIME OF THE YEAR, ALL SLOPES GREATER THAN 3:1 SHALL BE STABILIZED WITH DOUBLE NET EROSION CONTROL BLANKET BIONET SC150BN BY NORTH AMERICAN GREEN OR APPROVED EQUAL, OR EROSION CONTROL MIX SLOPE PROTECTION AS DETAILED WITHIN THE PLANS.

1.1.5 VERNON PLACE, AVON STREET, AND CONGRESS STREET SHALL BE SWEPT TO CONTROL MUD AND DUST FROM THE CONSTRUCTION SITE AS NECESSARY. ADD ADDITIONAL STONE TO THE STABILIZED CONSTRUCTION ENTRANCE TO MINIMIZE THE TRACKING OF MATERIAL OFF THE SITE AND ONTO THE SURROUNDING ROADWAYS.

1.1.6 DURING DEMOLITION, CLEARING AND GRUBBING OPERATIONS, STONE CHECK DAMS SHALL BE INSTALLED AT ANY AREAS OF CONCENTRATED FLOW. THE MAXIMUM HEIGHT OF THE CHECK DAM SHALL NOT EXCEED 2 FEET. THE CENTER OF THE CHECK DAM SHALL BE 6 INCHES BELOW THE OUTER EDGES OF THE DAM. THE CONTRACTOR SHALL MULCH THE SIDE SLOPES AND INSTALL STONE CHECK DAMS FOR ALL NEWLY EXCAVATED DITCH LINES WITHIN 24 HOURS OF THEIR CREATION.

1.1.7 SILT FENCE STAKE SPACING SHALL NOT EXCEED 6 FEET UNLESS THE FENCE IS SUPPORTED WITH 14 GAUGE WIRE IN WHICH CASE THE MAXIMUM SPACING SHALL NOT EXCEED 10 FEET. THE SILT FENCE SHALL BE "TOED" INTO THE GROUND.

1.1.8 STORMDRAIN INLET PROTECTION SHALL BE PROVIDED TO STORMDRAINS THROUGH THE USE OF ANY OF THE FOLLOWING: HAY BALE DROP INLET STRUCTURES, SILT FENCE DROP INLET SEDIMENT FILTER, GRAVEL AND WIRE MESH DROP INLET SEDIMENT FILTER, OR CURB INLET SEDIMENT FILTER. BARRIERS SHALL BE INSPECTED AFTER EVERY RAINFALL EVENT AND REPAIRED AS NECESSARY. SEDIMENTS SHALL BE REMOVED WHEN ACCUMULATION HAS REACHED ½ THE DESIGN HEIGHT.

1.1.9 DUST CONTROL SHALL BE ACCOMPLISHED BY THE USE OF ANY OF THE FOLLOWING: WATER, CALCIUM CHLORIDE, STONE, OR AN APPROVED MDEP PRODUCT. DUST CONTROL SHALL BE APPLIED AS NEEDED TO ACCOMPLISH DUST CONTROL.

1.1.10 TEMPORARY LOAM, SEED, AND MULCHING SHALL BE USED IN AREAS WHERE NO OTHER EROSION CONTROL MEASURE IS USED. APPLICATION RATES FOR SEEDING ARE PROVIDED AT THE END OF THIS REPORT.

1.1.11 STOCKPILES SHALL BE STABILIZED WITHIN 7 DAYS OF FORMATION UNLESS A SCHEDULED RAIN EVENT OCCURS PRIOR TO THE 7 DAY WINDOW, IN WHICH CASE THE STOCKPILE SHALL BE STABILIZED PRIOR TO THE RAIN EVENT. METHODS OF STABILIZATION SHALL BE MULCH, EROSION CONTROL MIX, OR EROSION CONTROL BLANKETS/MATS. SILT FENCE OR A WOOD WASTE COMPOST FILTER BERM SHALL BE PLACED DOWNHILL OF ANY SOIL STOCKPILE LOCATION.

1.1.12 FOR DISTURBANCE BETWEEN NOVEMBER 1 AND APRIL 15, PLEASE REFER TO WINTER STABILIZATION PLAN IN THIS REPORT AND THE MAINE EROSION AND SEDIMENT CONTROL BMP MANUAL FOR FURTHER INFORMATION.

1.1.13 IT IS OF THE UTMOST IMPORTANCE THAT STORMWATER RUNOFF AND POTENTIAL SEDIMENT FROM THE CONSTRUCTION SITE BE DIVERTED AROUND THE PROPOSED UNDERDRAINS UNTIL THE TRENCH IS BACKFILLED.

1.2 PERMANENT EROSION CONTROL MEASURES

THE FOLLOWING PERMANENT EROSION CONTROL MEASURES ARE INTENDED FOR POST DISTURBANCE AREAS OF THE PROJECT.

1.2.1 ALL DISTURBED AREAS DURING CONSTRUCTION, NOT SUBJECT TO OTHER PROPOSED CONDITIONS, SHALL RECEIVE A MINIMUM 4" OF LOAM, LIMED, AND MULCHED. EROSION CONTROL BLANKETS OR MATS SHALL BE PLACED OVER THE MULCH IN AREAS NOTED IN PARAGRAPH 4.1 OF THIS REPORT.

1.2.2 ALL STORMWATER DEVICES SHALL BE INSTALLED AND TRIBUTARY AREAS STABILIZED PRIOR RECEIVING STORMWATER.

1.2.3 REFER TO THE MAINE EROSION AND SEDIMENT CONTROL BMP MANUAL FOR ADDITIONAL INFORMATION.

2.0 EROSION AND SEDIMENTATION CONTROL PLAN

2.1 THE EROSION AND SEDIMENTATION CONTROL PLAN IS INCLUDED WITHIN THE PLAN SET.

3.0 DETAILS AND SPECIFICATIONS

3.1 EROSION CONTROL DETAILS AND SPECIFICATIONS ARE INCLUDED IN THE PLAN SET.

4.0 STABILIZATION PLAN FOR WINTER CONSTRUCTION

WINTER CONSTRUCTION CONSISTS OF EARTHWORK DISTURBANCE BETWEEN THE DATES OF NOVEMBER 1 AND APRIL 15. IF A CONSTRUCTION SITE IS NOT STABILIZED WITH PAVEMENT, A ROAD GRAVEL BASE, 75% MATURE VEGETATION COVER OR RIPRAP BY NOVEMBER 15, THEN THE SITE SHALL BE PROTECTED WITH OVER–WINTER STABILIZATION. ANY AREA NOT STABILIZED WITH PAVEMENT, VEGETATION, MULCHING, EROSION CONTROL MIX, EROSION CONTROL MATS, RIPRAP, OR GRAVEL BASE ON A ROAD SHALL BE CONSIDERED OPEN.

THE CONTRACTOR SHALL LIMIT THE WORK AREA TO AREAS THAT WORK WILL OCCUR IN DURING THE SUBSEQUENT 15 DAYS AND SO THAT IT CAN BE MULCHED ONE DAY PRIOR TO A SNOW EVENT. THE CONTRACTOR SHALL STABILIZE WORK AREAS PRIOR TO OPENING ADDITIONAL WORK AREAS TO MINIMIZE AREAS WITHOUT EROSION CONTROL MEASURES.

THE FOLLOWING MEASURES SHALL BE IMPLEMENTED DURING WINTER CONSTRUCTION PERIODS:

4.1 SEDIMENT BARRIERS

DURING FROZEN CONDITIONS, SEDIMENT BARRIERS MAY CONSIST OF EROSION CONTROL MIX BERMS OR ANY OTHER RECOGNIZED SEDIMENT BARRIERS AS FROZEN SOIL PREVENTS THE PROPER INSTALLATION OF HAY BALES OR SILT FENCES.

4.2 MULCHING

ALL AREAS SHALL BE CONSIDERED TO BE DENUDED UNTIL SEEDED AND MULCHED. HAY AND STRAW MULCH SHALL BE APPLIED AT A RATE OF 150 LB. PER 1,000 SQUARE FEET OR 3 TONS/ACRE (TWICE THE NORMAL ACCEPTED RATE OF 75–LBS./1,000 S.F. OR 1.5 TONS/ACRE) AND SHALL BE PROPERLY ANCHORED. EROSION CONTROL MIX MUST BE APPLIED WITH A MINIMUM 4 INCH THICKNESS. MULCH SHALL NOT BE SPREAD ON TOP OF SNOW. THE SNOW SHALL BE REMOVED DOWN TO A ONE–INCH DEPTH OR LESS PRIOR TO APPLICATION. AFTER EACH DAY OF FINAL GRADING, THE AREA SHALL BE PROPERLY STABILIZED WITH ANCHORED HAY OR STRAW OR EROSION CONTROL MATTING. AN AREA SHALL BE CONSIDERED TO HAVE BEEN STABILIZED WHEN EXPOSED SURFACES HAVE BEEN EITHER MULCHED OR ADEQUATELY ANCHORED SO THAT GROUND SURFACE IS NOT VISIBLE THROUGH THE MULCH. BETWEEN THE DATES OF NOVEMBER 1 AND APRIL 15, ALL MULCH SHALL BE ANCHORED BY EITHER MULCH NETTING, TRACKING OR WOOD CELLULOSE FIBER. THE COVER WILL BE CONSIDERED SUFFICIENT WHEN THE GROUND SURFACE IS NOT VISIBLE THROUGH THE MULCH. AFTER NOVEMBER 1ST, MULCH AND ANCHORING OF ALL EXPOSED SOIL SHALL OCCUR AT THE END OF EACH FINAL GRADING WORKDAY.

4.3 SOIL STOCKPILING

STOCKPILES OF SOIL OR SUBSOIL SHALL BE MULCHED FOR OVER WINTER PROTECTION WITH HAY OR STRAW AT TWICE THE NORMAL RATE OR WITH A FOUR–INCH LAYER OF EROSION CONTROL MIX. THIS SHALL BE DONE WITHIN 24 HOURS OF STOCKING AND RE–ESTABLISHED PRIOR TO ANY RAINFALL OR SNOWFALL.

4.4 SEEDING

BETWEEN THE DATES OF OCTOBER 15TH AND APRIL 1ST, LOAM OR SEED SHALL NOT BE REQUIRED. DURING PERIODS OF ABOVE FREEZING TEMPERATURES FINISHED AREAS SHALL BE FINE GRADED AND EITHER PROTECTED WITH MULCH OR TEMPORARILY SEEDED AND MULCHED UNTIL SUCH TIME AS THE FINAL TREATMENT CAN BE APPLIED. IF THE DATE IS AFTER NOVEMBER 1ST AND IF THE EXPOSED AREA HAS NOT BEEN LOAMED, FINAL GRADING WITH A UNIFORM SURFACE, THEN THE AREA MAY BE DORMANT SEEDED AT A RATE OF 3 TIMES HIGHER THAN SPECIFIED FOR PERMANENT SEED AND THEN MULCHED.

DORMANT SEEDING MAY BE PLACED PRIOR TO THE PLACEMENT OF MULCH OR EROSION CONTROL BLANKETS. IF DORMANT SEEDING IS USED FOR THE SITE, ALL DISTURBED AREAS SHALL RECEIVE 4" OF LOAM AND SEED AT AN APPLICATION RATE OF 5 LBS/1,000 S.F. ALL AREAS SEEDED DURING THE WINTER SHALL BE INSPECTED IN THE SPRING FOR ADEQUATE CATCH. ALL AREAS INSUFFICIENTLY VEGETATED (LESS THAN 75% CATCH) SHALL BE REVEGETATED BY REPLACING LOAM, SEED AND MULCH. IF DORMANT SEEDING IS NOT USED FOR THE SITE, ALL DISTURBED AREAS SHALL BE REVEGETATED IN THE SPRING.

4.5 OVER WINTER STABILIZATION OF DISTURBED SOILS

BY SEPTEMBER 15TH, ALL DISTURBED SOILS ON AREAS HAVING A SLOPE LESS THAN 15% SHALL BE SEEDED AND MULCHED. IF THE DISTURBED AREAS ARE NOT STABILIZED BY THIS DATE, THEN ONE OF THE FOLLOWING ACTIONS SHALL BE TAKEN TO STABILIZE THE SOIL FOR LATE FALL AND WINTER:

- STABILIZE THE SOIL WITH TEMPORARY VEGETATION – BY OCTOBER 1ST, SEED THE DISTURBED SOIL WITH WINTER RYE AT A SEEDING RATE OF 3LBS PER 1,000 S.F., LIGHTLY MULCH THE SEEDED SOIL WITH HAY OR STRAW AT 75 LBS PER 1,000 S.F., AND ANCHOR THE MULCH WITH PLASTIC NETTING. MONITOR GROWTH OF THE RYE OVER THE NEXT 30 DAYS. IF THE RYE FAILS TO GROW AT LEAST THREE INCHES OR FAILS TO COVER AT LEAST 75% OF THE DISTURBED SOIL BEFORE NOVEMBER 1ST, THEN MULCH THE AREA FOR OVER–WINTER PROTECTION.
- STABILIZE THE SOIL WITH SOD – STABILIZE THE DISTURBED SOIL WITH PROPERLY INSTALLED SOD BY OCTOBER 1ST. PROPER INSTALLATION INCLUDES PINNING THE SOD ONTO THE SOIL WITH WIRE PINS, ROLLING THE SOD TO GUARANTEE CONTACT BETWEEN THE SOD AND UNDERLYING SOIL, AND WATERING THE SOD TO PROMOTE ROOT GROWTH INTO THE DISTURBED SOIL.
- STABILIZE THE SOIL WITH MULCH – BY NOVEMBER 15TH, MULCH THE DISTURBED SOIL BY SPREADING HAY OR STRAW AT A RATE OF AT LEAST 150 LBS PER 1,000 S.F. ON THE AREA SO THAT NO SOIL IS VISIBLE THROUGH THE MULCH. IMMEDIATELY AFTER APPLYING THE MULCH, ANCHOR THE MULCH WITH PLASTIC NETTING TO PREVENT WIND FROM MOVING THE MULCH OFF THE DISTURBED SOIL.

4.6 OVER WINTER STABILIZATION OF DISTURBED SLOPES

ALL STONE–COVERED SLOPES SHALL BE CONSTRUCTED AND STABILIZED BY NOVEMBER 15TH. ALL SLOPES TO BE VEGETATED SHALL BE SEEDED AND MULCHED BY SEPTEMBER 1ST. A SLOPE IS CONSIDERED A GRADE GREATER THAN 15%. IF A SLOPE TO BE VEGETATED IS NOT STABILIZED BY SEPTEMBER 1ST, THEN ONE OF THE FOLLOWING ACTION SHALL BE TAKEN TO STABILIZE THE SLOPE FOR LATE FALL AND WINTER:

- STABILIZE THE SOIL WITH TEMPORARY VEGETATION AND EROSION CONTROL MATS – BY OCTOBER 1ST THE DISTURBED SLOPE SHALL BE SEEDED WITH WINTER RYE AT A SEEDING RATE OF 3 LBS PER 1,000 S.F. AND THEN INSTALL EROSION CONTROL MATS OR ANCHORED MULCH OVER THE SEEDING. IF THE RYE FAILS TO GROW AT LEAST THREE INCHES OR FAILS TO COVER AT LEAST 75% F THE SLOPE BY NOVEMBER 1ST, THEN THE CONTRACTOR SHALL COVER THE SLOPE WITH A LAYER OF EROSION CONTROL MIX OR WITH STONE RIPRAP.
- STABILIZE THE SOIL WITH SOD – THE DISTURBED SLOPE SHALL BE STABILIZED WITH PROPERLY INSTALLED SOD BY OCTOBER 1ST. PROPER INSTALLATION INCLUDES THE CONTRACTOR PINNING THE SOD ONTO THE SLOPE WITH WIRE PINS, ROLLING THE SOD TO GUARANTEE CONTACT BETWEEN THE SOD AND UNDERLYING SOIL, AND WATERING THE SOD TO PROMOTE ROOT GROWTH INTO THE DISTURBED SOIL. THE CONTRACTOR SHALL NOT USE LATE–SEASON SOD INSTALLATION TO STABILIZE SLOPES HAVING A GRADE GREATER THAN 3H:1V OR HAVING GROUNDWATER SEEPS ON THE SLOPE FACE.
- STABILIZE THE SOIL WITH EROSION CONTROL MIX – EROSION CONTROL MIX SHALL BE PROPERLY INSTALLED BY NOVEMBER 15TH. THE CONTRACTOR SHALL NOT USE EROSION CONTROL MIX TO STABILIZE SLOPES HAVING GRADES GREATER THAN 2H:1V OR HAVING GROUNDWATER SEEPS ON THE SLOPE FACE.
- STABILIZE THE SOIL WITH STONE RIPRAP – PLACE A LAYER OF STONE RIPRAP ON THE SLOPE BY NOVEMBER 15TH. A REGISTERED PROFESSIONAL ENGINEER SHALL BE HIRED TO DETERMINE THE STONE SIZE NEEDED FOR STABILITY ON THE SLOPE AND TO DESIGN A FILTER LAYER FOR UNDERNEATH THE RIPRAP.

5.0 INSPECTION AND MAINTENANCE

A PERSON WITH KNOWLEDGE OF EROSION AND STORMWATER CONTROL, INCLUDING THE STANDARDS AND CONDITIONS IN THE PERMIT, SHALL CONDUCT PERIODIC VISUAL INSPECTIONS OF INSTALLED EROSION CONTROL MEASURES. THE FREQUENCY OF INSPECTION SHALL OCCUR AT LEAST ONCE EVERY TWO WEEKS, AS WELL AS AFTER A "STORM EVENT": A "STORM EVENT" SHALL CONSIST 0.5 INCHES OF RAIN WITHIN A 24 HOUR PERIOD. THE FOLLOWING EROSION AND SEDIMENT CONTROL – BEST MANAGEMENT PRACTICES (BMP'S) SHALL INSPECTED IN THE MANNER AS DESCRIBED.

5.1 SEDIMENT BARRIERS

HAY BALE BARRIERS, SILT FENCES AND FILTER BERMS SHALL BE INSPECTED AND REPAIRED FOR THE FOLLOWING IF THERE ARE ANY SIGNS OF EROSION OR SEDIMENTATION BELOW THEM. IF THERE ARE SIGNS OF UNDERCUTTING AT THE CENTER OR THE EDGES OF THE BARRIER, OR IMPOUNDING OF LARGE VOLUMES OF WATER BEHIND THEM, SEDIMENT BARRIERS SHALL BE REPLACED WITH A TEMPORARY CHECK DAM. SHOULD THE FABRIC ON A SILT FENCE OR FILTER BARRIER DECOMPOSE OR BECOME INEFFECTIVE PRIOR TO THE END OF THE EXPECTED USABLE LIFE AND THE BARRIER IS STILL NECESSARY, THE FABRIC SHALL BE REPLACED PROMPTLY. SEDIMENT DEPOSITS SHOULD BE REMOVED WHEN DEPOSITS REACH APPROXIMATELY ONE–HALF THE HEIGHT OF THE BARRIER. FILTER BERMS SHOULD BE RESHAPED AS NEEDED. ANY SEDIMENT DEPOSITS REMAINING IN PLACE AFTER THE SILT FENCE OR FILTER BARRIER IS NO LONGER REQUIRED SHOULD BE DRESSED TO CONFORM TO THE EXISTING GRADE, PREPARED AND SEEDED.

5.2 STABILIZED STONE CONSTRUCTION ENTRANCES

THE EXIT SHALL BE MAINTAINED IN A CONDITION THAT WILL PREVENT TRACKING OF SEDIMENT ONTO PUBLIC RIGHTS–OF–WAY. WHEN THE CONTROL PAD BECOMES INEFFECTIVE, THE STONE SHALL BE REMOVED ALONG WITH THE COLLECTED SOIL MATERIAL AND REDISTRIBUTED ON SITE IN A STABLE MANNER. THE ENTRANCE SHOULD THEN BE RECONSTRUCTED. THE CONTRACTOR SHALL SWEEP OR WASH PAVEMENT AT EXITS, WHICH HAVE EXPERIENCED MUD–TRACKING ON TO THE PAVEMENT OR TRAVELED WAY. WHEN WASHING IS REQUIRED, IT SHALL BE DONE ON AN AREA STABILIZED WITH AGGREGATE, WHICH DRAINS INTO AN APPROVED SEDIMENT TRAPPING DEVICE. ALL SEDIMENT SHALL BE PREVENTED FROM ENTERING STORM DRAINS, DITCHES, OR WATERWAYS.

5.3 MULCHED AREAS

ALL MULCHES MUST BE INSPECTED PERIODICALLY, IN PARTICULAR AFTER RAINSTORMS, TO CHECK FOR RILL EROSION. IF LESS THAN 90% OF THE SOIL SURFACE IS COVERED BY MULCH, ADDITIONAL MULCH SHALL BE IMMEDIATELY APPLIED. NETS MUST BE INSPECTED AFTER RAIN EVENTS FOR DISLOCATION OR FAILURE. IF WASHOUTS OR BREAKAGE OCCUR, RE–INSTALL THE NETS AS NECESSARY AFTER REPAIRING DAMAGE TO THE SLOPE. WHERE MULCH IS USED IN CONJUNCTION WITH ORNAMENTAL PLANTINGS, INSPECT PERIODICALLY THROUGHOUT THE YEAR TO DETERMINE IF MULCH IS MAINTAINING COVERAGE OF THE SOIL SURFACE. REPAIR AS NEEDED.

5.4 DUST CONTROL

WHEN TEMPORARY DUST CONTROL MEASURES ARE USED, REPETITIVE TREATMENT SHALL BE APPLIED AS NEEDED TO ACCOMPLISH CONTROL.

5.5 STORMWATER APPURTENANCES

ALL UNDERDRAINS, STORM DRAINS, AND CATCH BASINS NEED TO BE OPERATING EFFECTIVELY AND FREE OF DEBRIS.

5.6 EROSION AND SEDIMENTATION CONTROL INSPECTIONS:

ACORN ENGINEERING HAS PERSONNEL QUALIFIED TO CONDUCT EROSION AND SEDIMENTATION CONTROL INSPECTIONS. FOR FURTHER INFORMATION CONTACT:

CONTACT: WILL SAVAGE, PE
TELEPHONE: (207) 775–2655

QUALIFICATIONS:

- MAINE PROFESSIONAL ENGINEERING LICENSE #11419
- MAINE DEP – CERTIFIED IN MAINTENANCE & INSPECTION OF STORMWATER BMP'S CERT #14
- CERTIFIED EROSION, SEDIMENT AND STORM WATER INSPECTOR (CESSWI) CERT #0293
- CERTIFIED PROFESSIONAL IN EROSION AND SEDIMENT CONTROL (CPESC) CERT. #4620

THE CONTRACTOR HAS SOLE RESPONSIBILITY FOR COMPLYING WITH THE EROSION AND SEDIMENTATION REPORT/PLAN, INCLUDING CONTROL OF FUGITIVE DUST. THE CONTRACTOR SHALL BE RESPONSIBLE FOR ANY MONETARY PENALTIES RESULTING FROM FAILURE TO COMPLY WITH THESE STANDARDS.

6.0 IMPLEMENTATION SCHEDULE

THE FOLLOWING IMPLEMENTATION SEQUENCE IS INTENDED TO MAXIMIZE THE EFFECTIVENESS OF THE ABOVE DESCRIBED EROSION CONTROL MEASURES. CONTRACTORS SHOULD AVOID OVEREXPOSING DISTURBED AREAS AND LIMIT THE AMOUNT OF STABILIZATION AREA.

1. INSTALL A STABILIZED CONSTRUCTION ENTRANCE IN ALL LOCATIONS WHERE CONSTRUCTION TRAFFIC WILL ENTER AND EXIT THE SITE.
2. INSTALL PERIMETER SILT FENCE OR EROSION CONTROL BERM.
3. INSTALL ALL OTHER EROSION CONTROL DEVICES AS NECESSARY THROUGHOUT THE REMAINDER OF THIS SCHEDULE.
4. COMMENCE INSTALLATION OF DRAINAGE INFRASTRUCTURE.
5. CONTAIN RUNOFF WITHIN THE SITE WHILE PROVIDING AN ENGINEERED OUTLET WITH SILTATION BARRIER TO THE STORM SYSTEM WITHIN KENNEBEC STREET.
6. COMMENCE EARTHWORK OPERATIONS, WALL AND FOUNDATION INSTALLATION.
7. COMMENCE INSTALLATION OF UTILITIES.
8. CONTINUE EARTHWORK AND GRADING TO SUBGRADE AS NECESSARY FOR CONSTRUCTION.
9. COMPLETE INSTALLATION OF DRAINAGE INFRASTRUCTURE, AS WELL AS OTHER UTILITY WORK.
10. COMPLETE REMAINING EARTHWORK OPERATIONS.
11. INSTALL SUB–BASE AND BASE GRAVELS IN PAVED AREAS.
12. INSTALL PAVING, CURBING AND BRICKWORK.
13. LOAM, LIME, FERTILIZE, SEED AND MULCH DISTURBED AREAS AND COMPLETE ALL LANDSCAPING.
14. ONCE THE SITE IS STABILIZED, 90% CATCH OF GRASS HAS BEEN OBTAINED, OR MULCHING OF LANDSCAPE AREAS IS COMPLETE REMOVE ALL TEMPORARY EROSION CONTROL MEASURES.
15. TOUCH UP AREAS WITHOUT A VIGOROUS CATCH OF GRASS WITH LOAM AND SEED.
16. COMPLETE SITE SIGNAGE AND STRIPING.
17. EXECUTE PROPER MAINTENANCE OF ALL TEMPORARY AND PERMANENT EROSION CONTROL MEASURES THROUGHOUT THE PROJECT.

THE ABOVE IMPLEMENTATION SEQUENCE SHOULD BE GENERALLY FOLLOWED BY THE SITE CONTRACTOR. HOWEVER, THE CONTRACTOR MAY CONSTRUCT SEVERAL ITEMS SIMULTANEOUSLY. THE CONTRACTOR SHALL SUBMIT TO THE OWNER A SCHEDULE OF THE COMPLETION OF THE WORK. IF THE CONTRACTOR IS TO COMMENCE THE CONSTRUCTION OF MORE THAN ONE ITEM ABOVE, THEY SHALL LIMIT THE AMOUNT OF EXPOSED AREAS TO THOSE AREAS IN WHICH WORK IS EXPECTED TO BE UNDERTAKEN DURING THE FOLLOWING 30 DAYS.

THE CONTRACTOR SHALL RE–VEGETATE DISTURBED AREAS AS RAPIDLY AS POSSIBLE. ALL AREAS SHALL BE PERMANENTLY STABILIZED WITHIN 7 DAYS OF FINAL GRADING OR BEFORE A STORM EVENT. THE CONTRACTOR SHALL INCORPORATE PLANNED INLETS AND DRAINAGE SYSTEMS AS EARLY AS POSSIBLE INTO THE CONSTRUCTION PHASE.

7.0 CONCLUSION

THE ABOVE EROSION CONTROL NARRATIVE IS INTENDED TO MINIMIZE THE DEVELOPMENT IMPACT BY IMPLEMENTING TEMPORARY AND PERMANENT EROSION CONTROL MEASURES. THE CONTRACTOR SHALL ALSO REFER TO THE MAINE EROSION AND SEDIMENT CONTROL BMP MANUAL FOR ADDITIONAL INFORMATION.

SEEDING PLAN

SITE PREPARATION

THE SEEDED AREAS SHALL BE FEASIBLY GRADED OUT TO PROVIDE THE USE OF EQUIPMENT FOR SEEDBED PREPARATION, SEEDING, MULCH APPLICATION, AND MULCH ANCHORING. IF NECESSARY, THE SITE MAY REQUIRE ADDITIONAL TEMPORARY EROSION CONTROL MEASURES OUTLINED IN THE EROSION CONTROL REPORT.

SEEDBED PREPARATION

FERTILIZER SHALL BE APPLIED TO THE SITE AT A RATE OF 13.8 POUNDS PER 1,000 SQUARE FEET. THE COMPOSITION OF THE FERTILIZER SHALL BE 10–10–10 (N–P205–K20) OR EQUIVALENT.

LIMESTONE SHALL BE APPLIED TO THE SITE AT A RATE OF 138 POUNDS PER 1,000 SQUARE FEET.

SEEDING

THE COMPOSITION AND AMOUNT OF TEMPORARY SEED APPLIED TO A SITE SHALL BE DETERMINED BY THE FOLLOWING TABLE:

TEMPORARY SEED APPLICATION RATES

SEED	LBS / ACRE	RECOMMENDED SEEDING DATES
WINTER RYE	2.57	8/15 TO 10/1
OATS	1.84	4/1 TO 7/1 8/15 TO 9/15
ANNUAL RYGRASS	0.92	4/1 TO 7/1
SUDANGRASS	0.92	5/15 TO 8/15
PERENNIAL	0.92	8/15 TO 9/15
TOTAL	7.17 LBS/ACRE	

PERMANENT SEED APPLICATION RATES

SEED	LBS / ACRE
KENTUCKY BLUEGRASS	20.00
CREEPING RED FESCUE	20.00
PERENNIAL RYEGRASS	4.80
TOTAL	44.8 LBS/ACRE

MULCHING

MULCH SHALL BE HARDWOOD AND APPLIED AT A RATE OF 70 LBS – 90 LBS PER 1,000 SQUARE FEET. THE MULCH SHALL BE INSTALLED AT A MINIMUM DEPTH OF 4 INCHES. THE SEEDED AREA SHALL BE MULCHED IMMEDIATELY AFTER SEED IS APPLIED. MULCHING DURING THE WINTER SEASON SHALL BE DOUBLE THE NORMAL AMOUNT. REFER TO DETAIL FOR MORE INFORMATION.

CONCLUSION

PLEASE REFER TO THE MAINE EROSION AND SEDIMENT CONTROL BMP MANUAL FOR ADDITIONAL INFORMATION PERTAINING TO TEMPORARY SEEDING AND MULCHING.

PRELIMINARY
NOT ISSUED FOR
CONSTRUCTION

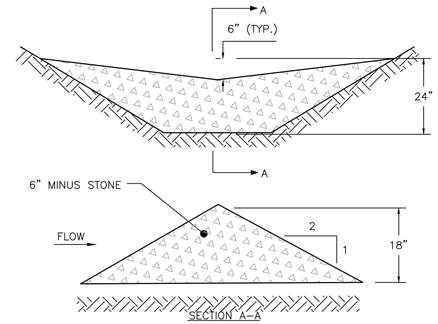

SECTION A–A

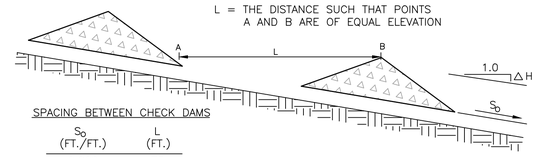

SPACING BETWEEN CHECK DAMS

S_0 (FT./FT.)	L (FT.)
0.020	75
0.030	50
0.040	40
0.050	30
0.080	20
0.100	10

STONE CHECK DAM
NOT TO SCALE

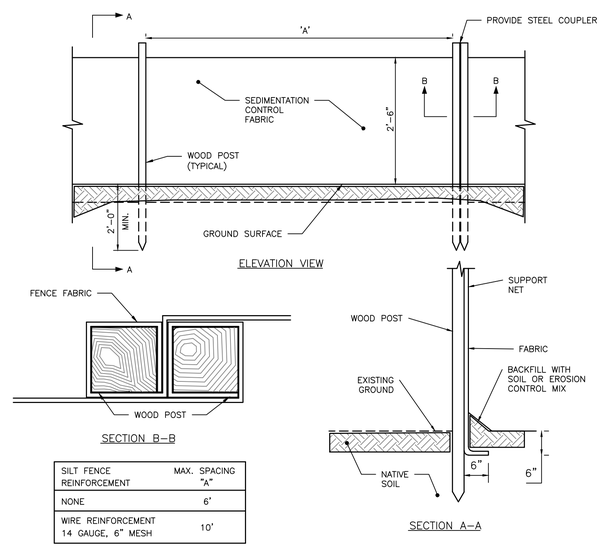

SILT FENCE REINFORCEMENT	MAX. SPACING "A"
NONE	6'
WIRE REINFORCEMENT 14 GAUGE, 6" MESH	10'

SILTATION FENCE DETAIL
NOT TO SCALE

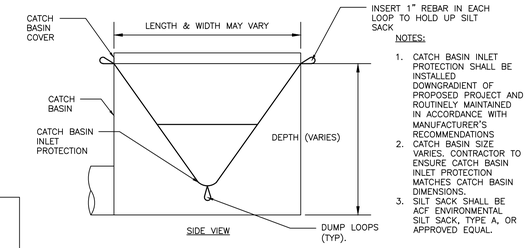

NOTES:

1. CATCH BASIN INLET PROTECTION SHALL BE INSTALLED DOWNGRADIENT OF PROPOSED PROJECT AND ROUTINELY MAINTAINED IN ACCORDANCE WITH MANUFACTURER'S RECOMMENDATIONS
2. CATCH BASIN SIZE VARIES. CONTRACTOR TO ENSURE CATCH BASIN INLET PROTECTION MATCHES CATCH BASIN DIMENSIONS.
3. SILT SACK SHALL BE ACF ENVIRONMENTAL SILT SACK, TYPE A, OR APPROVED EQUAL.

CATCH BASIN INLET PROTECTION
NOT TO SCALE

ISSUED FOR	BY / DATE
CITY APP.	WHS 2/26/18

DRAWING NAME: EROSION & SEDIMENTATION CONTROL DETAILS

PROJECT NAME: 82 HANOVER REDEVELOPMENT

CLIENT: TOM WATSON & CO., LLC
PORTLAND, ME

ACORN ENGINEERING, INC.

THIS PLAN SHALL NOT BE MODIFIED WITHOUT WRITTEN PERMISSION FROM ACORN ENGINEERING, INC. ANY MODIFICATIONS, ALTERATIONS OR OTHERWISE, SHALL BE AT THE USER'S SOLE RISK AND WITHOUT LIABILITY TO ACORN ENGINEERING, INC.

ACORN ENGINEERING, INC.
158 DAMPORON STREET, PORTLAND, MAINE 04102
(207) 775–2655

FILE:	1093_CIVIL
JN:	1093
SCALE:	NTS
DESIGNED BY:	WHS
DRAWN BY:	ADG
CHECKED BY:	WHS

STATE OF MAINE WILLIAM H. SAVAGE No. 11419 2-26-18 PROFESSIONAL ENGINEER

DRAWING NO.
C-46

82 HANOVER STREET
PORTLAND, MAINE

MARCH 2□, 2018

PROGRESS PRINT ONLY
Not for Construction

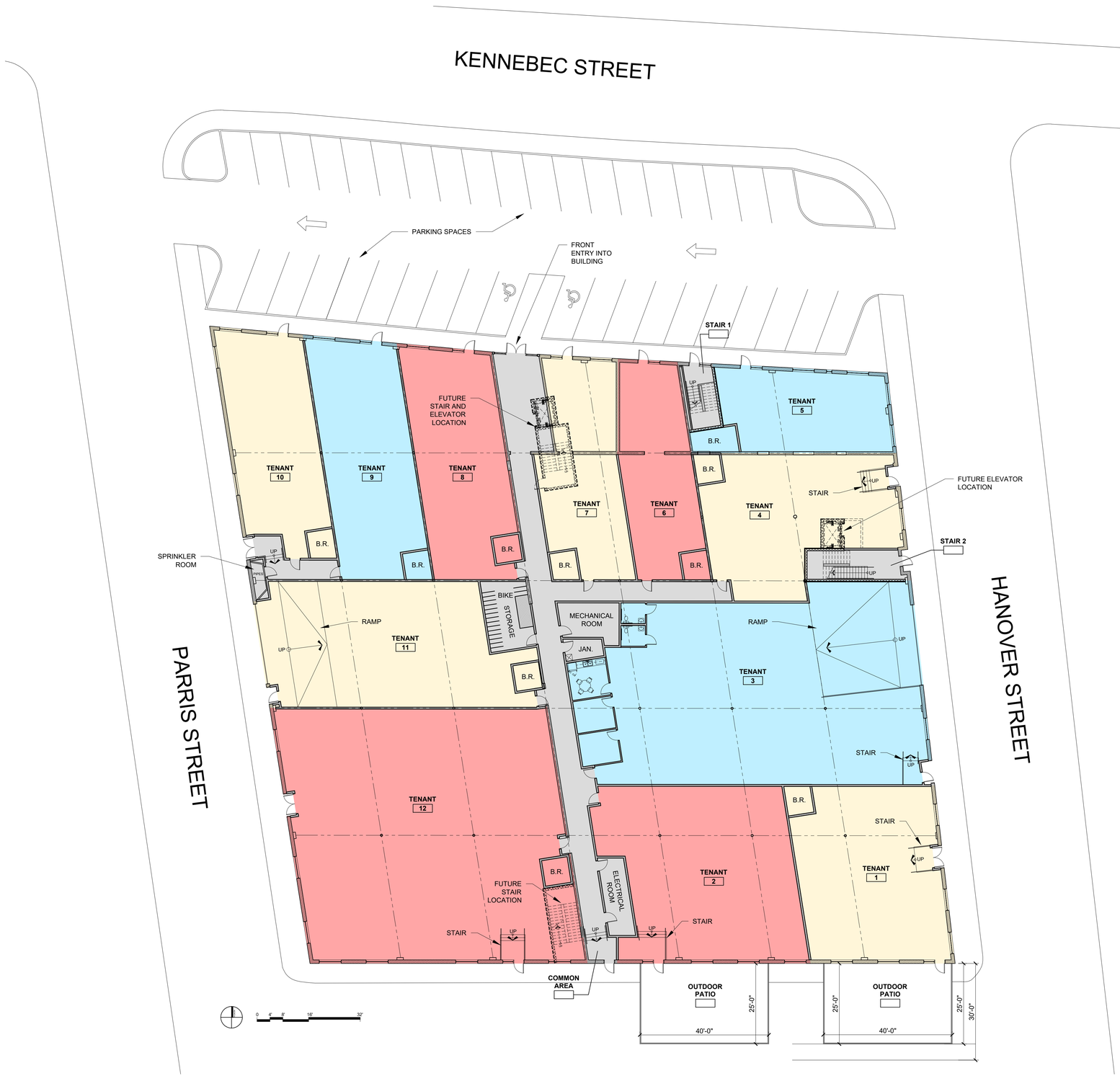

1 FIRST FLOOR PLAN
1/16" = 1'-0" (WHEN PRINTED AT 24" X 36")

RYAN SENATORE **ARCHITECTURE**

82 HANOVER STREET

PORTLAND, ME

MARCH 15, 2018

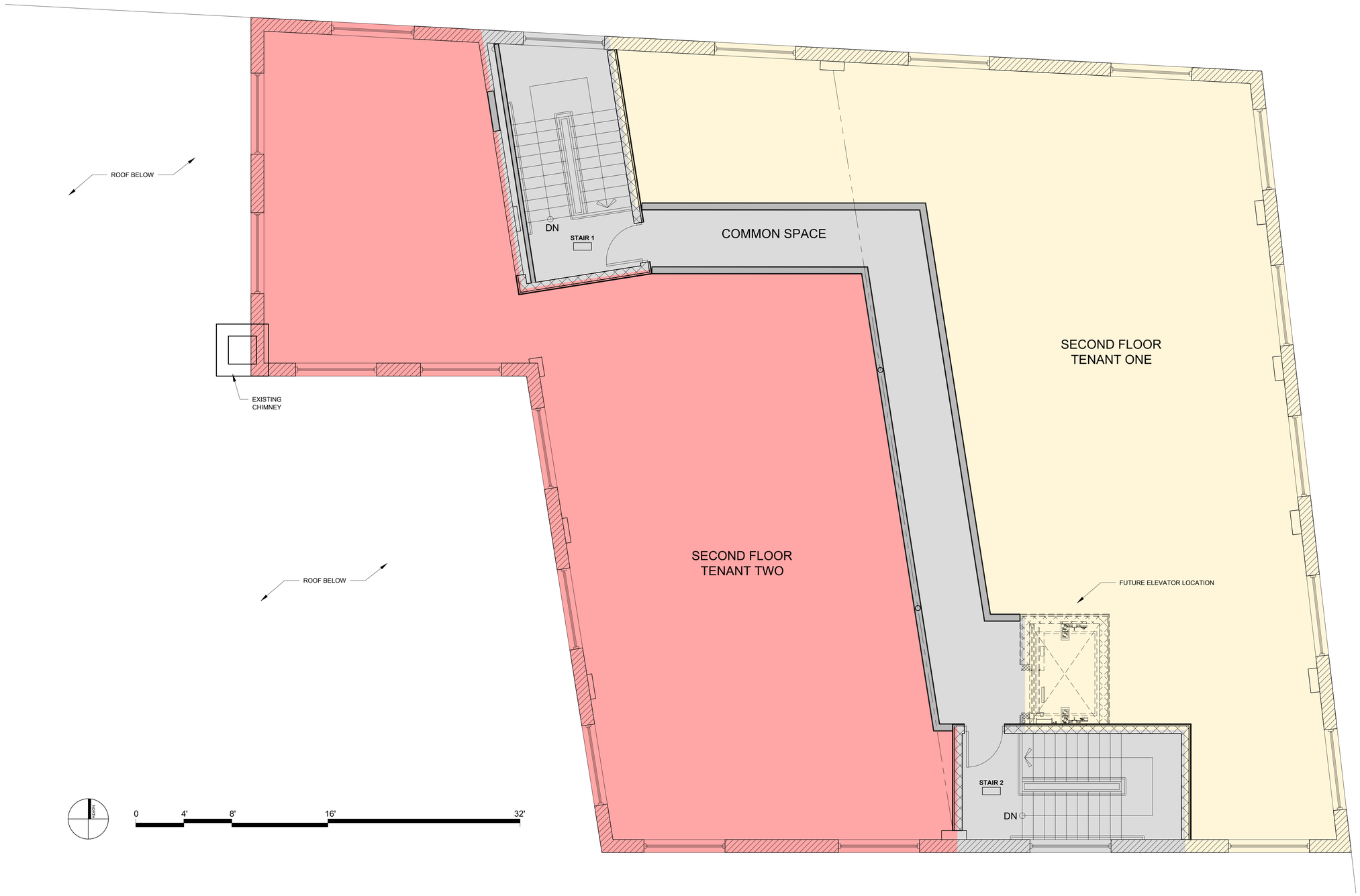

1 SECOND FLOOR PLAN
1/4" = 1'-0"

PROGRESS PRINT ONLY
Not for Construction

RYAN SENATORE **ARCHITECTURE**

82 HANOVER STREET
PORTLAND, MAINE

FEBRUARY 22, 2018

PROGRESS PRINT ONLY
Not for Construction

1 PERSPECTIVE IMAGE - NORTH ELEVATION
NTS

2 PERSPECTIVE IMAGE - NORTH ELEVATION
NTS

RYAN SENATORE **ARCHITECTURE**

82 HANOVER STREET
PORTLAND, ME

APRIL 9, 2018

1 NORTH-WEST CORNER PERSPECTIVE VIEW
NTS

2 NORTH-EAST CORNER PERSPECTIVE VIEW
NTS

RYAN SENATORE **ARCHITECTURE**

82 HANOVER STREET
PORTLAND, MAINE

FEBRUARY 22, 2018

PROGRESS PRINT ONLY
Not for Construction

1 PERSPECTIVE IMAGE - SOUTH-EAST CORNER
NTS

2 PERSPECTIVE IMAGE - EAST ELEVATION
NTS

RYAN SENATORE **ARCHITECTURE**

82 HANOVER STREET
PORTLAND, MAINE

FEBRUARY 22, 2018

PROGRESS PRINT ONLY
Not for Construction

1 PERSPECTIVE IMAGE - SOUTH ELEVATION
NTS

2 PERSPECTIVE IMAGE - WEST ELEVATION
NTS

RYAN SENATORE **ARCHITECTURE**

82 HANOVER STREET
PORTLAND, ME

APRIL 9, 2018

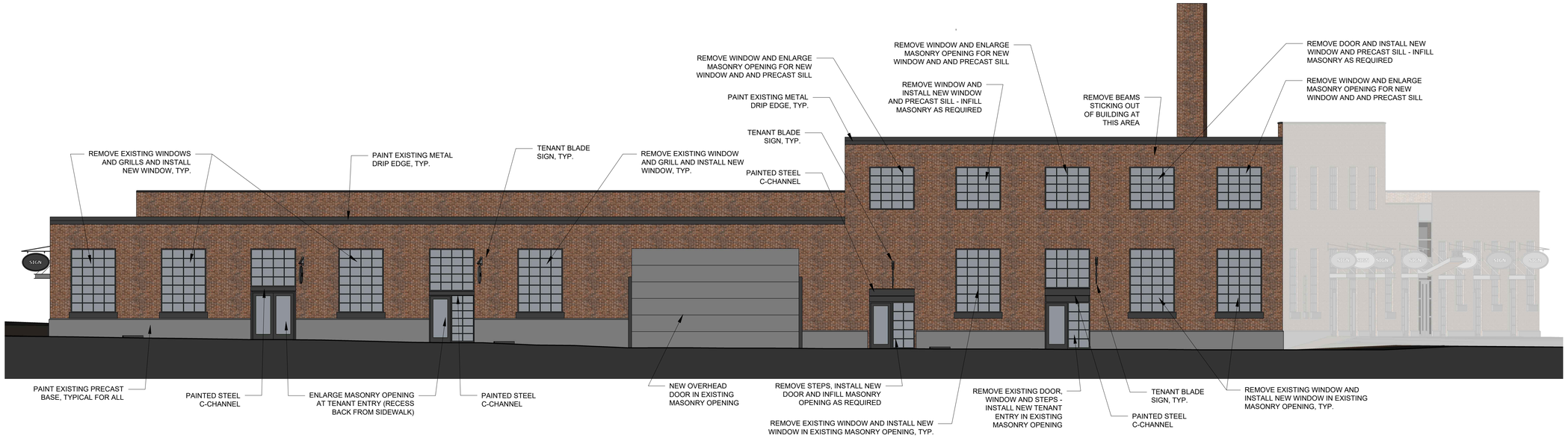

1 EAST ELEVATION
1/8" = 1'-0"

PROGRESS PRINT ONLY
Not for Construction

2 WEST ELEVATION
1/8" = 1'-0"

RYAN SENATORE **ARCHITECTURE**

82 HANOVER STREET
PORTLAND, ME

APRIL 9, 2018

1 NORTH-WEST CORNER PERSPECTIVE VIEW
NTS

2 NORTH-EAST CORNER PERSPECTIVE VIEW
NTS

RYAN SENATORE **ARCHITECTURE**

82 HANOVER STREET
PORTLAND, ME

APRIL 9, 2018

1 EAST ELEVATION PERSPECTIVE VIEW
NTS

PROGRESS PRINT ONLY
Not for Construction

2 WEST ELEVATION PERSPECTIVE IMAGE
NTS

RYAN SENATORE **ARCHITECTURE**

82 HANOVER STREET
PORTLAND, ME

APRIL 9, 2018

1 SOUTH-EAST CORNER PERSPECTIVE VIEW
NTS

PROGRESS PRINT ONLY
Not for Construction

2 NORTH ELEVATION PERSPECTIVE VIEW
NTS

RYAN SENATORE **ARCHITECTURE**

82 HANOVER STREET
PORTLAND, ME

APRIL 9, 2018

1 SOUTH ELEVATION PERSPECTIVE VIEW
NTS

2 SOUTH ELEVATION AERIAL PERSPECTIVE VIEW
NTS

PROGRESS PRINT ONLY
Not for Construction

RYAN SENATORE **ARCHITECTURE**

82 HANOVER STREET
PORTLAND, MAINE

MARCH 15, 2018

PROGRESS PRINT ONLY
Not for Construction

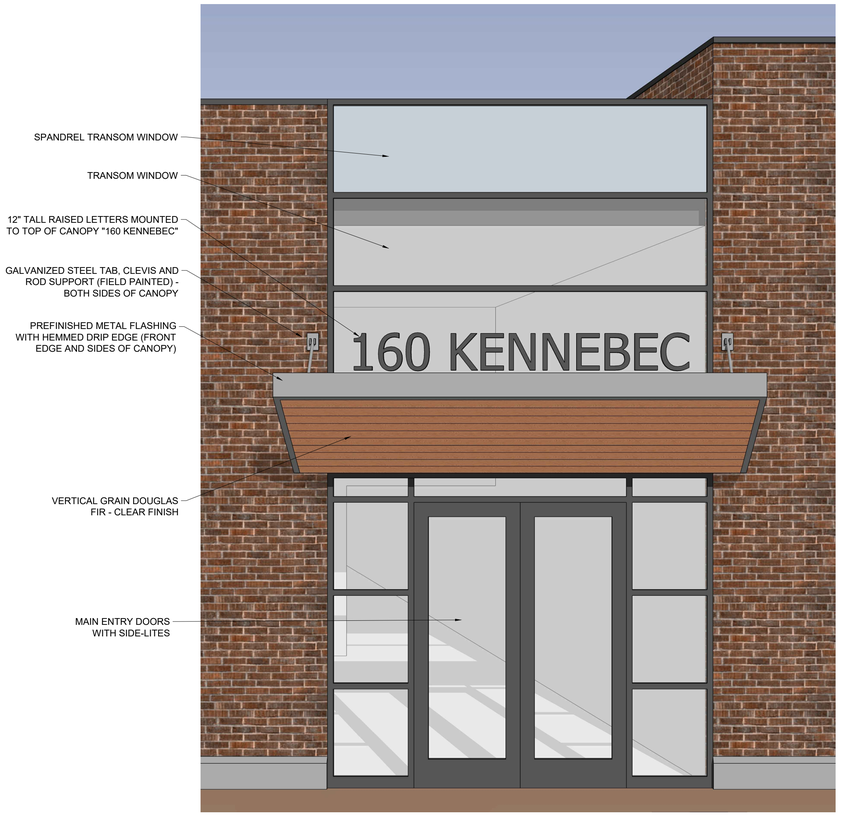

1 MAIN ENTRY CANOPY ELEVATION
1/2" = 1'-0" (WHEN PRINTED AT 24" X 36")

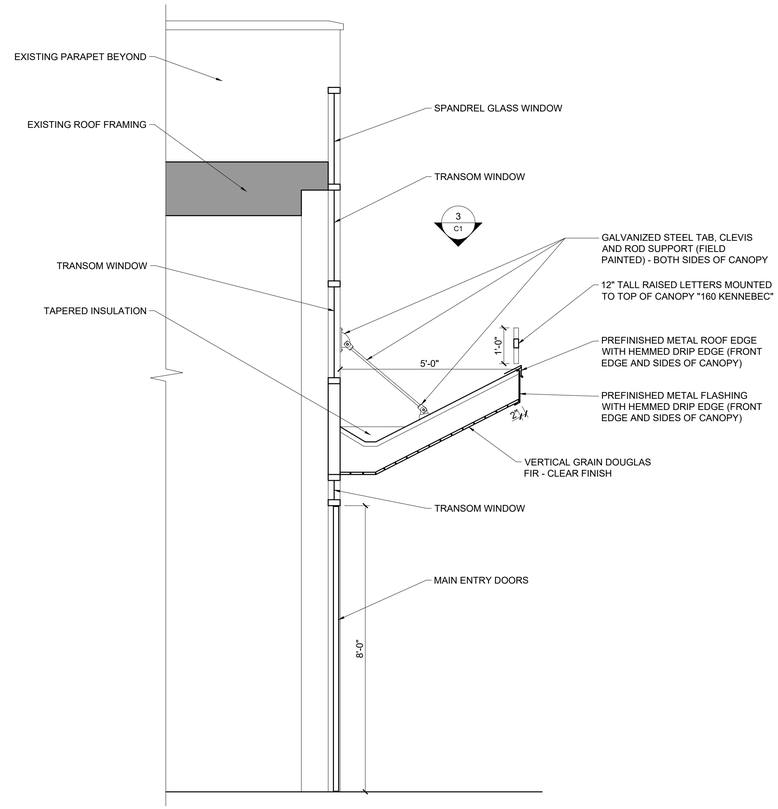

2 MAIN ENTRY CANOPY SECTION
1/2" = 1'-0" (WHEN PRINTED AT 24" X 36")

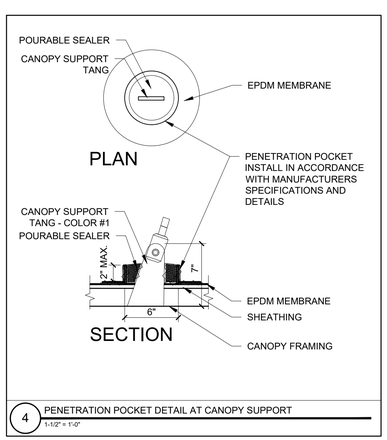

4 PENETRATION POCKET DETAIL AT CANOPY SUPPORT
1-1/2" = 1'-0"

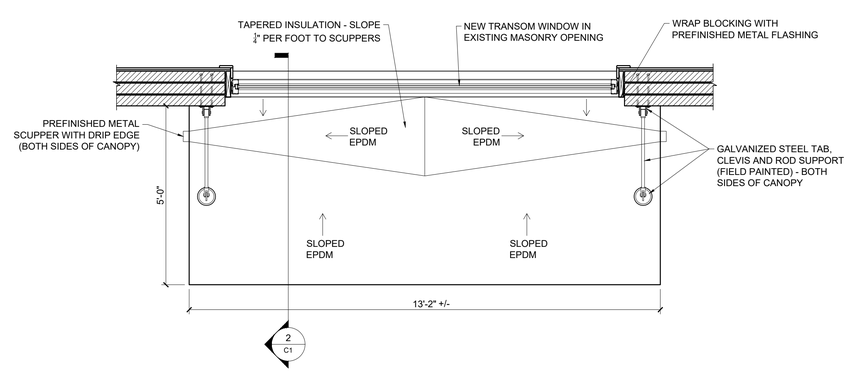

3 MAIN ENTRY CANOPY PLAN
1/2" = 1'-0" (WHEN PRINTED AT 24" X 36")

SHEET
C1

RYAN SENATORE **ARCHITECTURE**

82 HANOVER STREET
PORTLAND, MAINE

MARCH 15, 2018

PROGRESS PRINT ONLY
Not for Construction

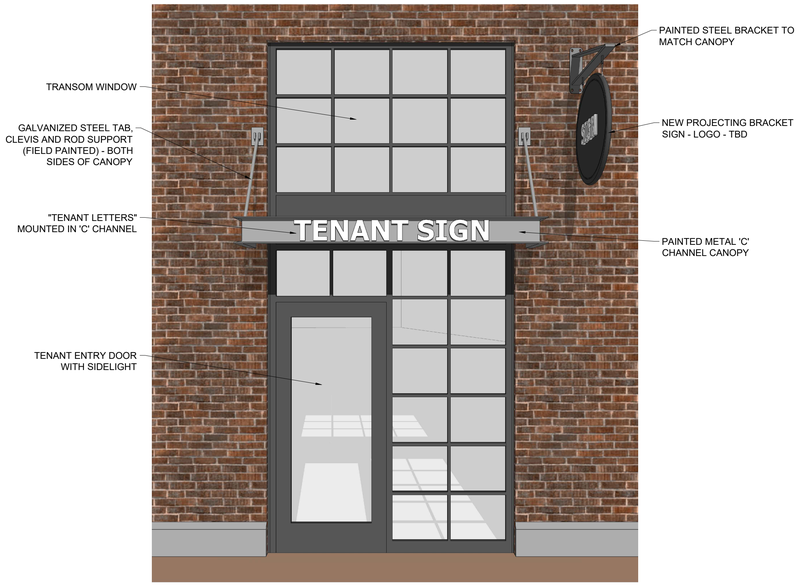

1 TENANT ENTRY CANOPY ELEVATION
1/2" = 1'-0" (WHEN PRINTED AT 24" X 36")

5 TENANT ENTRY CANOPY PERSPECTIVE
NTS

6 MAINE ENTRY AND TENANT ENTRY CANOPY PERSPECTIVE IMAGE
NTS

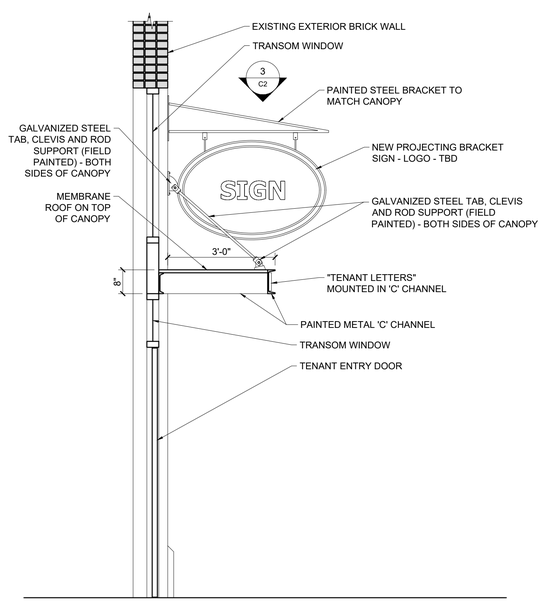

2 TENANT ENTRY CANOPY SECTION
1/2" = 1'-0" (WHEN PRINTED AT 24" X 36")

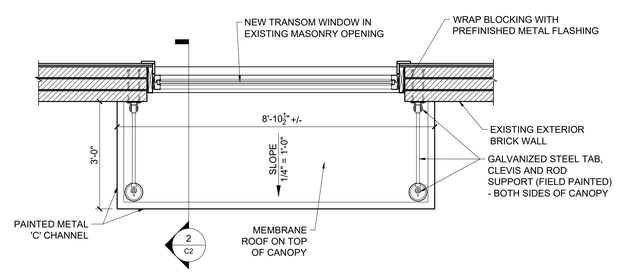

3 TENANT ENTRY CANOPY PLAN
1/2" = 1'-0" (WHEN PRINTED AT 24" X 36")

SHEET
C2

RYAN SENATORE **ARCHITECTURE**

NOT FOR CONSTRUCTION

KENNEBEC STREET

ENTIRE ROW: 9'X18' STANDARD PARKING

ENTIRE ROW: 9'X15' COMPACT PARKING

Composite Passenger Vehicle

BIKE STORAGE

MECHANICAL ROOM

JAN.

PARRIS STREET

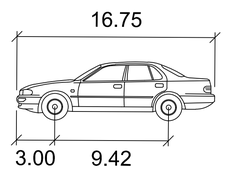

Composite Passenger Vehicle

	feet
Width	: 6.33
Track	: 6.33
Lock to Lock Time	: 6.0
Steering Angle	: 26.4

TYPICAL ARCHITECTURAL VEHICLE USED FOR ANALYSIS

ISSUED FOR	BY DATE
COMMENT RESPONSE	WHS 5/2/18

DRAWING NAME: AUTOTURN EXHIBIT

PROJECT NAME: 82 HANOVER STREET REDEVELOPMENT

CLIENT: TOM WATSON & CO., LLC PORTLAND, ME

ACORN ENGINEERING, INC.

THIS PLAN SHALL NOT BE MODIFIED WITHOUT WRITTEN PERMISSION FROM ACORN ENGINEERING, INC. ANY MODIFICATIONS MADE WITHOUT, OR OTHERWISE, SHALL BE AT THE USER'S SOLE RISK AND WITHOUT LIABILITY TO ACORN ENGINEERING, INC.

ACORN ENGINEERING, INC.
158 DANFORTH ST. PORTLAND, MAINE 04102
(207) 775-2655

FILE:	1093_CIVIL
JN:	1093
SCALE:	NTS
DESIGNED BY:	WHS
DRAWN BY:	SJL
CHECKED BY:	WHS

DRAWING NO.

AT

Portland Maine Yes. Google's good here.

Jennifer Munson <jmy@portlandmaine.gov>

82 Hanover Street - Public Comments

George Rheault <george.rheault@gmail.com> Thu, May 17, 2018 at 2:21 PM
To: planningboard@portlandmaine.gov, hcd@portlandmaine.gov, Tuck O'Brien <sgo@portlandmaine.gov>, Barbara Barhydt <bab@portlandmaine.gov>, jmy <jmy@portlandmaine.gov>

As a local resident who lives a block up Hanover Street from the project site, I am strongly OPPOSED to the parking concessions being given by the City to the applicant.

At a minimum the Planning Board should NOT discriminate against West Bayside by reducing parking requirements (thru 49% compact spaces and deferred arrangements for off-site parking leases) - reductions that would not be tolerated in any other peninsula neighborhood.

The developer should have to absorb NOW the upfront cost of addressing their parking needs (via off-site leasing arrangements) rather than being allowed to avoid them well into the future with a consultant and hot air aspirations.

While a TDM plan is great and welcome, it is completely insufficient for handling the expected trip generation the new multi-use development is proposing.

Below are key points that arise in the context of this project (mostly relevant to traffic/parking management but also some miscellaneous points).

PLANNING STAFF MUST ACKNOWLEDGE SUBURBAN MESS THAT PORTLAND HAS CREATED IN THE VICINITY
- Since the development of West Bayside kicked into gear in the 1990s, the Marginal Way corridor and adjacent streets have been planned with a distinct anti-urban auto-centric heavily parked philosophy.
- The area has 3 drive-thru bank branches (including the Bank of America a short way up the hill at Casco & Shepley)
- Virtually all new buildings are surrounded by parking fields or built-in structured parking (Office bldgs for Bangor Savings/Gorham Bank/AAA/former State HHS Bldg as well as Planet Fitness bldg and strip-mall type retailing centers - Trader Joe's/WestMarine/Walgreens, Whole Foods, Planet Dog/AT&T, Verizon, UrgentCare-former NAPA Parts AutoCenter, Century Plaza (Chipotle, etc.), Intermed, Bayside Student Housing, AVESTA - Pearl Place I/II, 409 Cumberland Ave)
- Much of pre-existing building also is serviced by ample adjacent surface parking lots (Enterprise, Bayside Bowl (w/ expansion), Baxter Academy/Maine Behavioral Health, 190 Lancaster social service centers), Avesta and Salvation Army programmatic facilities
- Users have been relentlessly conditioned in the last 20 years to expect relatively easy parking in the vicinity - it is hogwash to suddenly expect a single development to be the exception to that rule

PERCEPTIONS OF UNSAFE BAYSIDE PUSH A DRIVING MENTALITY AND MUST BE CONFRONTED IN TDM PLANNING
- Due to irresponsible (and erroneous) media coverage, many visitors to West Bayside from the Greater Portland area believe that the area is unsafe (particularly in the evenings)
- Planning staff materials and applicant submissions make no attempt to confront this reality in ANY of their undertakings or analysis
- Any realistic effort to get more people out of their vehicles MUST have a public relations strategy to attack and erase the stereotypes that have grown up around the social services cluster in West Bayside which is actually very safe (most of the harm done is petty nuisance crime, self-harm or harm between street people but very very seldom to bystanders or other residents)
- Reluctance of suburban drivers/patrons to park and walk an extra distance away is a MAJOR impediment to traffic demand management efforts and the TDM should be taken back to the toolshop to incorporate this point BEFORE any Planning Board approvals are given out

TDM/TRAFFIC COUNT METHODOLOGIES ARE FLAWED/VAGUE
- The precedents offered - Coffee-by-Design and Isa Bistro - suggest poor survey design and thus suspect counts.
- Both locations - CBD and Isa - have on-site parking but also rely heavily on adjacent on-street and off-street parking options in the vicinity.
- There is NOTHING in the applicant's materials to make clear how exactly the pedestrian vs. vehicle counts were arrived at and whether adequate controls were in place to sort out the true nature of the patron activity
- Would, for example, someone parking in the 55 Portland St (DPW Bldg) parking lot who then walks to dinner at Isa a block or so away be counted as a vehicle patron or a pedestrian visitor? Similar example for CBD at Diamond Street - if someone parks in the large surface lot that supports Rising Tide and then walked over to CBD - would they have been counted as a pedestrian?
- If the study methodology did not have the wide enough observation points to capture the arrival points of patrons, then it is LIKELY that the demand totals significantly UNDERCOUNTED the amount of driving done at both of these "representative" establishments

BAYSIDE BOWL/CENTURY PLAZA OVERFLOWS
- Much better precedents for traffic demand proxies would have been Bayside Bowl (which saw a recent expansion and is still attracting increasing activity since its opening in 2010) and the evolution of the Century Tire properties since 2016
- There is nothing in the applicant submissions or from planning staff to indicate whether Bayside Bowl is making any progress on any traffic demand management goals set forth as part of its approvals.
- Indeed, to anyone who spends time in the neighborhood, Bayside Bowl ROUTINELY relies on the 82 Hanover Street lot for overflow parking weekly if not nightly.

- The worst episodes of this overflow phenomenon is during BB's big events including their April Professional Bowling Association tournaments
- Attached are two photos of the most recent manifestation of this - the photos make it very clear that 49% compact spaces will exclude a great number of the types of vehicles that are likely to be visiting establishments leasing at 82 Hanover Street
- It is not clear at all that Bayside Bowl compensates the City for the use of this overlow parking.either through a long-term agreement or on an ad-hoc event basis.
- Where does the TDM confront the fact that Bayside Bowl is already heavily reliant on the 82 Hanover Street parcel for its parking needs and thus redevelopment of 82 Hanover St for its own needs will dramatically impact neighborhood parking

BAXTER ACADEMY EXPANSION
- No where is it mentioned how Baxter Academy has been faring so far under its recently approved TDM (the results of their 6 month check-in is unknown)
- Also, it should be anticipated in any TDM that Baxter Academy in the next 3-5 years will likely be expanding its enrollment to take over the center core of their Lancaster Street building (pending Legislative approval to increase their charter school enrollment)
- This expansion is likely enough that it should be factored into and anticipated in the applicant's TDM projections

AMPLE EVENING OFF-SITE LEASING OPPORTUNITIES EXIST
- The applicant has MANY options in the vicinity for taking advantage of surface and structured parking that is lightly used after 5 p.m.
- A partial list includes: 190 Lancaster lot (tons), Bangor Savings Bank-Marginal Way lot (20 spaces), AAA-Marginal Way lot (tons), USPS-Marginal Way lot (tons), InterMed Bldg parking structure
- The applicant should be incentivized to be permitted to "burn off" these additional (and admittedly costly) off-site arrangements as it achieves its modest TDM goals

REQUIRE MODEST PARKING SHUTTLE PROGRAM
- Applicant is well connected with area real estate players and could easily convene a discussion of an area-wide parking shuttle arrangement
- A modest-sized vehicle (even a college campus type mini-van shuttle) operating from 4 to midnight picking up and delivering patrons to satellite lots and back to 82 Hanover St would enable the lofty goals of the TDM plan to be achieved WHETHER OR NOT patrons leave their cars behind, especially since this is unlikely (most of all in tough winter conditions or during hot spells when comfort and convenience is at a premium)
- A carefully monitored pilot program (24 months) would give us reams of data to evaluate whether similar efforts should be extended to other projects and areas of the Portland Peninsula

RECENT CONVERSION OF 12 SPACES ALONG KENNEBEC STREET FROM UNLIMITED PARKING TO 30 MINUTE ONLY FROM 9 AM - 6 PM
- This nakedly political act of favoritism by the City Council (enacted April 2018) seems to contradict the Planning Staff rhetoric and goals in the project materials
- By pushing the long-term parking problem to other parts of West Bayside, in order to give private benefits to the owners of the strip-mall bays around the Chipotle eatery/Leavitt & Sons Deli, suggests that the City of Portland is NOT actually in favor of mitigating traffic demand in the area, but only saddling residents with more parking headaches while privileging well capitalized property developers

AIR-B-N-B
- West Bayside is plagued with a rash of AirBnB conversions in the last 2 years
- Out-of-state license plates fill up the side streets from Thursday to Monday on most weekends from Easter through Thanksgiving
- Often, particularly for concert goers and other event driven visitors like weddings/bachelor/ette gatherings, the parties staying in a single AirBnB unit will be arriving from separate originations and in separate vehicles
- The TDM materials and other traffic submissions from the applicant DO NOT EVEN MENTION THIS DEMAND ELEMENT

NO TRANSPORTATION CREDITS FOR CONCRETE SIDEWALKS
- The applicant is already saving a considerable amount of money due to City sidewalk material policy that discriminates against Bayside
- Despite the repeated protestations from City officials that concrete sidewalks are supposedly safer in the winter than brick sidewalks, the rest of the Peninsula still gets expensive brick (and supposedly hazardous) sidewalks while Bayside must make do with concrete sidewalks (which age poorly compared to brick and are more expensive to repair when they crack due to frost heaves, etc.)
- The applicant should not get credit here for transportation system improvements when in effect, this is making the area LESS ATTRACTIVE

KENNEBEC STREET/SOMERSET EXTENSION RECONSTRUCTION
- The applicant has not had to document ANY of its representations about the current status of the Kennebec Street by-way project
- Where is the funding set aside for this work to commence in 2018?
- The project requires emminent domain proceedings and a process timeline and overview for that procedure (presumably Council action) has NOT been made available in the record
- The DPW/Maine DOT and other City officials should be required to introduce into the record the exact status of this project and how close a realistic bid package and construction cycle are actually ready to be undertaken before the Planning Board makes approvals based on this project being a "go."

FURTHER TDM FLAWS
- TDM puts far too much emphasis on the group nature of the prospective patrons using the new amenities to be found at 82 Hanover
- Wedding parties and their related ilk (bachelor/bachelorette affairs) often are driving up to Portland from points south at different times and/or arrive at the Jetport separately and thus frequently convene via multiple (rented or otherwise) automobiles just as much OR MORE THAN they carpool.
- The TDM provides ZERO data to support their contention that people arrive in groups any more or less than they arrive separately

- Many patrons arrive separately because they originate from separate places AND plan to depart to separate places
- Nothing within the TDM suggests any mitigation of this kind of behavior is likely to take place in the near-term based on the applicant's promised undertakings

MORE TRASH CANS
- Far more important than street trees is easily accessible and attractive street furniture like trash cans
- Street litter is a big annoyance in any built-up environment and West Bayside especially
- Skip the focus on landscaping and get us some good vandal-proof combo trash & recycling cans along with effective cigarette butlers for all the cool kidz who will be smoking outside of 82 Hanover

---

4 attachments

Bayside Bowl - Parking at 82 Hanover St.JPG
455K

Bayside Bowl II - Parking at 82 Hanover St.JPG
433K

Sidewalk Encroachment - 190 Lancaster.JPG
668K

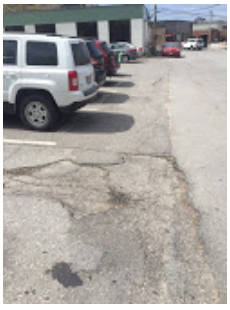

Sidewalk Encroachment II - 190 Lancaster.JPG
666K

TRD
TUNDRA

STOP
NO PARKING ANY TIME
RESERVED
RESERVED
8614 W

RESERVED
RESERVED

Comments from bike / pedestrian committee regarding parking requirements at 82 Hanover St. development

Damon Yakovleff <damon.yakovleff@gmail.com> May 16, 2018 1:48 PM
Posted in group: **Planning Board**

Dear Members of the Planning Board,

Please find attached a letter from Portland's Bicycle Pedestrian Advisory Committee regarding parking requirements for the proposed development at 82 Hanover St.

Thank you for your time and consideration.

Sincerely,

Damon Yakovleff
Chair, Portland Bicycle Pedestrian Advisory Committee

Portland Bicycle and Pedestrian Advisory Committee
pbpac@googlegroups.com

May 16th, 2018

Dear Members of the Planning Board,

The Portland Bicycle and Pedestrian Advisory Committee urges you to consider reducing the parking requirements for the development proposed at 82 Hanover St. We understand that the required parking study for this project indicated a need for parking in excess of the City's zoning ordinance requirements. We strongly believe that this result is contrary to the intended urban purpose of the B7 zoning. The assumptions made likely do not reflect the ultimate trajectory of this or any other neighborhood of Portland. We need to be planning for a future that includes far less of a need for storage of personal automobiles on development sites.

Our Committee has, for many years, supported policies of all kinds intended to shift travel from motor vehicles to other modes. It would be a shame to see outdated and inflated parking requirements end up cluttering our city with unnecessary auto-centric infrastructure. If every new development has to provide for parking need generated during peak demand, any kind of true urban development supported by non-automobile transportation modes is unworkable.

To be clear: Our committee sees this issue as applying throughout our city. This letter is not to be interpreted to indicate a position on any non-transportation component of this or any other project. But make no mistake: We support reducing parking requirements, especially in the case (like this one) of developers implementing meaningful measures to promote alternative modes.

Sincerely,

Damon Yakovleff
Chair, Portland Bicycle and Pedestrian Advisory Committee

The Portland Bicycle and Pedestrian Advisory Committee is an ad-hoc group of Portland-area residents working to make the city and region a better place to walk, bicycle, and wheel chair. We advocate and educate on bicycle, transit, and pedestrian issues, including handicap accessibility, with support from the city's Healthy Portland office, and in collaboration with other offices and organizations including the Bicycle Coalition of Maine, Portland Trails, PACTS, the Department of Public Services and the Planning Department.

MEMORANDUM
PLANNING AND URBAN DEVELOPMENT DEPARTMENT
PLANNING DIVISION

To:	Sean Dundon, Chair, and Members of the Portland Planning Board
From:	Nell Donaldson, Senior Planner
Date:	May 11, 2018
Re:	Impact Fee Study Update
Meeting Date:	May 17, 2018

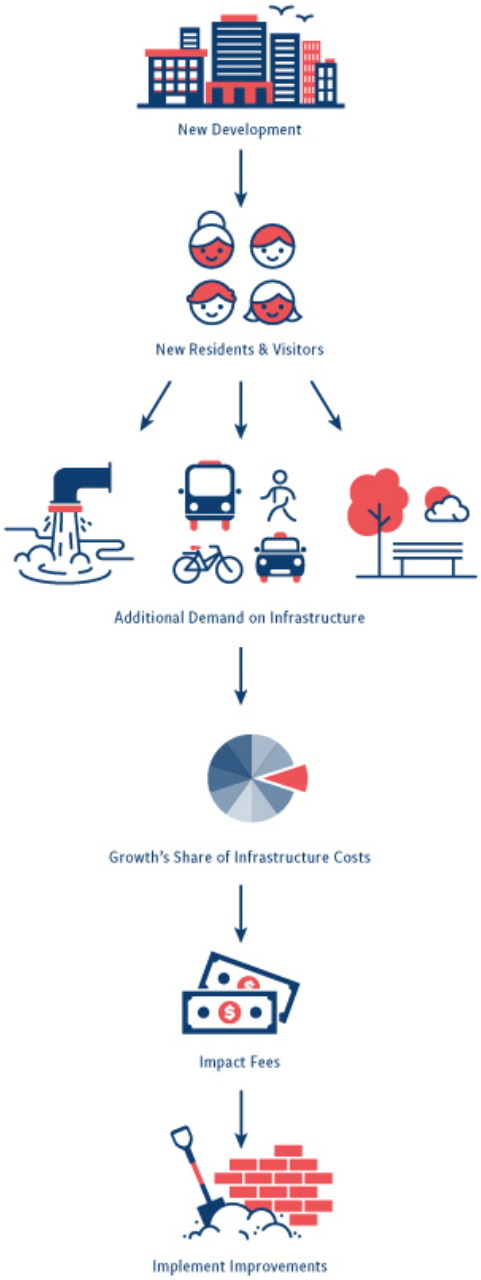

Figure 1: Impact fee process

I. INTRODUCTION

In late 2017, on the recommendation of the city's recently-adopted comprehensive plan, at the request of the City Manager, and with the support of the Council's Economic Development Committee, the city's Planning Division began an investigation into the "potential of a more robust framework for assessing development-related impacts" in the city *(Portland's Plan, 67).* The purpose of this exploration, as stated in *Portland's Plan,* is to "generate additional funding [for facilities and services], while also adding clarity and predictability to existing [review] procedures." This investigation began in earnest with staff research and engagement of a consultant with national experience in impact fee design. This Planning Board workshop will provide an introduction to this consultant, to the scope of work for the Impact Fee Study, and to an early memo to establish demographic and land use assumptions.

II. WHAT ARE IMPACT FEES?

Impact fees are charges paid by new development to fund the cost of providing municipal facilities to serve that development. This idea is premised on the concept that when development occurs, it can bring many benefits, but it also affects the existing infrastructure around it by adding more cars, bikes, and pedestrians to the streets, increasing sewer and stormwater flows into city systems, and infusing additional visitors into the city's parks and open spaces. In turn, this infrastructure requires additional investment. Acting on this logic, impact fees are widely used throughout the United States to assess the cost of new development's share of growth-related infrastructure projects. Impact fees have been used in some communities in the United States for the past 50+ years.

III. WHERE ARE IMPACT FEES?

Although impact fees are particularly common in states that have experienced rapid population growth in the west and south, they are found in the majority of states nationwide. Concord and Manchester, NH have impact fees, as does Burlington, VT. In Maine,

Table 1: Maine Communities with Impact Fees

	Transportation	Sewer/Water	Open Space/Recreation	Fire/EMS	Schools
Brewer	●	●			
Brunswick		●	●		
Freeport	●				
Gorham		●	●		
Lewiston	●	●			
Pownal			●	●	
Saco		●	●	●	
Scarborough	●				●
Windham	●		●		
York		●			●

the legislature laid the foundation for impact fees with the Comprehensive Planning and Land Use Regulation Act of 1987. In the time since, communities across the state have developed impact fee ordinances *(Table 1)*.

IV. HOW ARE IMPACT FEES USED?

The use of impact fees varies widely, depending on state enabling legislation, but in all cases impact fees may only be used to construct, expand, or replace infrastructure required to serve new development. Many communities use impact fees to address growth-related capital costs associated with roads, parks, water, and sewer infrastructure. Fire and police-related impact fees are also fairly common, as are school impact fees. In Maine, impact fees may be used for transportation projects, public safety facilities, sewer and water systems, parks and open space, and school improvements. Impact fees may not be used to pay for operations or maintenance, and may not be used to address existing deficiencies in these systems.

V. HOW MUCH ARE IMPACT FEES?

Regardless of where impact fees are used, courts have established that there must be a rational nexus and rough proportionality between the type and scale of development and the fee imposed. Per guidance from the Maine State Planning Office, "the expansion of the facility and/or service must be necessary and must be caused by the development; the fees charged must be based on the costs of the new facility/service apportioned to the new development; and the fees must benefit those who pay" *(Maine State Planning Office, 4)*. Given these standards, in order for impact fees to be charged, a community must conduct an analysis that identifies growth-related infrastructure costs and apportions those costs to projected development, often by development type, on a square foot, unit, or per trip basis. The resulting fees must be established through a council-adopted ordinance that meets a series of state requirements around the provision of language to address the relationship between fees and growth's share of infrastructure costs, the treatment of revenues generated from impact fees, timely use of impact fees, and refunds *(Title 30-A MRSA §4354)*.

As a product of the great variation in communities that have adopted impact fees, and the great variation in uses of impact fees, the amount of impact fees varies widely from state to state and community to community. A 2015 study of impact fees across the country by Duncan Associates, a national firm specializing in impact fee work, found that state-wide average non-utility (i.e. excluding water and wastewater) impact fees for single-family residential projects ranged from less than $1,000 in Arkansas to almost $25,000 in California *(Duncan Associates)*. In New Hampshire, the study found total residential fees ranging from approximately $3,000/3-br single-family home in Manchester to $5,000 in Concord. In Burlington, the study estimated a $5,000 fee for a 3-br single-family home. The same study found that fees across the country averaged approximately $6,000 per KSF for retail uses, approximately $4,000 per KSF for office uses, and approximately $3,000 per KSF for industrial uses.

VI. HOW DOES THIS RELATE TO PORTLAND'S CURRENT ORDINANCE?

As the Planning Board is well aware, the City of Portland's existing site plan ordinance allows the city to require mitigation "so as to be consistent with City Council approved master plans and facilities plans and with off-premises infrastructure, including but not limited to sewer and stormwater, streets, trails, pedestrian and bicycle network, environmental management or other public facilities" *(City of Portland Land Use Code 14-526(c)1.a)*. Further, the city's *Technical Manual* requires that developments that generate more than 100 passenger car equivalents obtain a Traffic Movement Permit (TMP) under the city's delegated review authority. The issuance of a TMP includes a "summary of findings and recommendations for improvements and other impact mitigation measures" *(City of Portland Technical Manual, 2).* Under these regulations, the city negotiates mitigation on a case-by-case basis predicated on an analysis of impacts identified through the site plan or subdivision review process.

As a product of this process, in some cases, developers make in-kind physical improvements, upgrading a traffic light or installing pedestrian signalheads and ramps at a nearby intersection. In other cases, developers are required to make financial infrastructure contributions proportionate to their impacts. These contributions are held in separate "infrastructure accounts" until they can be drawn down to pay for the improvement identified through the review process.

Because this process is conducted on a case-by-case basis, it is neither as systematic or predictable as many would prefer. Further, the system often penalizes the "last one in," whose development causes an intersection level of service to fail, rather than addressing the incremental impact of all prior developments. An impact fee framework for the City of Portland would establish a more predictable, transparent, and equitable way of assessing the impact of incremental growth on public facilities and services. An impact fee system would also provide the city with some measure of efficiency.

VII. IMPACT FEE STUDY SCOPE & SCHEDULE

In mid-2017, the City Council adopted *Portland's Plan 2030*, a new comprehensive plan designed to guide the city's growth and change over the next ten years. Among the plan's recommendations is a strong commitment to exploring new ways of funding our critical facilities and services, particularly as they are used by a growing number of residents, workers, and visitors. The plan anticipates future population and employment growth in the city and suggests an exploration of impact fees as a means of assessing capital costs associated with that growth.

In late 2017, the Economic Development Committee supported the initiation of an Impact Fee Study by the Department of Planning and Urban Development, in coordination with the Department of Public Works and the Parks, Recreation, and Facilities Department *(Attachment 1)*. This fee exploration has been designed to assess the potential of impact fee systems for multi-modal transportation infrastructure, parks and open space, and wastewater infrastructure.

The Impact Fee Study began in earnest with the hiring of TischlerBise, a consulting firm with national experience in impact fee design, in January of 2018. The study's first step is to compile the data, including population and employment growth projections, that will serve as the foundation for the impact fee analysis. In late April, Tischler developed a final draft memo summarizing demographic and development assumptions for the study *(Attachment 2)*. This memo was based on data provided by the Department of Planning & Urban Development, the Department of Public Works, and the Department of Parks, Recreation, and Facilities, and includes discussion of population, development, employment, traffic, and wastewater usage trends in the city. This Planning Board workshop will provide an opportunity for TischlerBise to present the findings contained in this memo and field questions from the Planning Board about both the memo and the scope of the study more broadly.

Figure 2: Impact Fee Study timeline

The next phase of the study will involve the technical exercise of determining capital facility needs and desired service levels for each of the three fee types under consideration. The study will explore various standard methodologies for deriving fees on a per unit, per trip, or per square foot basis and identify the most appropriate methodology for each fee type. The last step of the study will analyze projected funding and cash flow to understand the likely revenue stream and capital expenditures associated with the fees and the preparation of draft and final impact fee reports. Ultimately, a draft impact fee ordinance, based on these reports, will be presented to the Planning Board and City Council. Throughout the process, staff will meet with Council committees, as well as an informal group of stakeholders to garner feedback on the Impact Fee Study. A project website has also been developed (https://www.recodeportland.me/impact-fee-study/).

VIII. NEXT STEPS

1. Staff to review Planning Board and public comment on the Impact Fee Study and the draft demographic and land use assumptions memo;
2. Staff to schedule a second workshop with the Planning Board to review subsequent work products and a draft impact fee ordinance.

IX. LIST OF REFERENCES

City of Portland, *Portland's Plan* (June 5, 2017)
City of Portland, *Technical Manual*
Duncan Associates, *National Impact Fee Survey: 2015* (November 11, 2015)
Maine State Planning Office, *Financing Infrastructure Through Impact Fees* (January 2003)

X. ATTACHMENTS

1. Impact Fee Memo to the Economic Development Committee (Jeff Levine, August 31, 2017)
2. Draft Demographic Data and Development Projections for Impact Fee Study (TischlerBise, April 23, 2018)

Portland, Maine Yes. Life's good here.

Jeff Levine, AICP
Director, Planning & Urban Development Department

Memorandum

To: Economic Development Committee

From: Jeff Levine, Director, Planning & Urban Development

Date: August 31, 2017

Re: Impact Fees

One of the recommendations of the Comprehensive Plan is to look at a system of Impact Fees for the City as a way of both funding city infrastructure, and providing predictability for developers. This memo outlines what Impact Fees are, how they have been applied elsewhere, and a general approach to an Impact Fee system for Portland.

<u>What Are Impact Fees?</u>
Impact Fees are a systematic way of having new development pay for the infrastructure demands it creates. Cities that use Impact Fees choose certain types of infrastructure they feel needs to be improved and develop a baseline and needs assessment for each of them. Costs are developed for future needs and then assigned to new development as it comes in. When sufficient funds have been collected, the improvements are made. Often there is a feedback system in place – as improvements are made, a new needs assessment is conducted and the Impact Fee system is revised accordingly.

Impact fees can be a logical and fair way to address public impacts of new development. Developers are able to plug a mitigation cost into their pro forma and plan for it, rather than having to negotiate mitigation and deal with the uncertainty of that process. The City is able to devote energy into implementing these improvements, rather than into extensive negotiations with each developer based on their documented impacts. Neighbors and community groups will know what projects in their neighborhood are being funded and more confidence that they will be completed.

Commonly, impact fees are collected to mitigate impacts on transportation systems; parks & open space; schools; and stormwater/sewer systems. Costs are charged on either a square foot basis or on a per unit basis. For example, Concord, NH, has an impact fee for transportation improvements that charges $2,110 per new single family home, $1,449 per multifamily unit, and $1.70 per square foot of office space. Concord also charges a per unit fee for recreational facilities and for schools.

It is critical that any impact fee system be based on solid data regarding current and future needs, as well as meeting tests established by the U.S. Supreme Court related to the fees having a *rational nexus* to the development (*Nollan v. California Coastal Commission*, 483 U.S. 825 (1987)) and have *rough proportionality* to the actual impact of the project (*Dolan v. City of Tigard*, 512 U.S. 374 (1994).)

The American Planning Association has a policy guide on impact fees that provides a solid basis for thinking about their utility:

> "Impact Fees, when based on a comprehensive plan and used in conjunction with a sound capital improvement plan, can be an effective too for ensuring adequate infrastructure to accommodate growth where and when it is anticipated"

<u>Where Are They Used Nationally?</u>
Impact fees are used in a majority of states nationwide. A 2015 survey looked at 270 communities using impact fees as part of their development review process in 29 states and found the average impact fee for single family homes was $11,868 and the average impact fee for office development was $4,356/1000 square feet.[1]

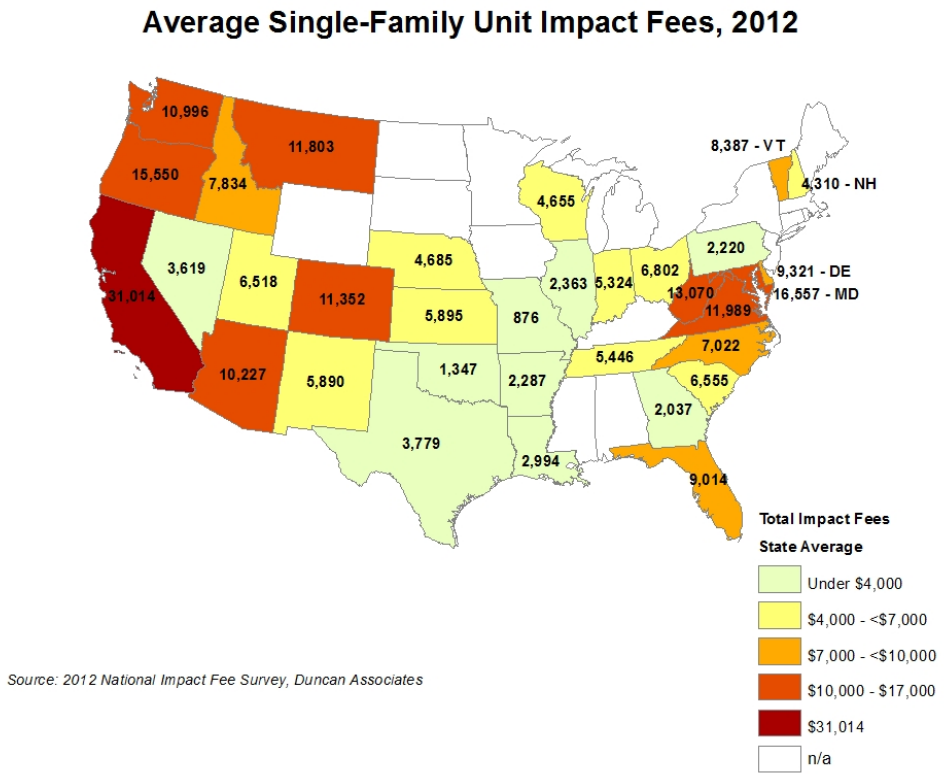

[1] *National Impact Fee Survey 2015*, Clancy Mullen, Duncan Associates, Austin, TX

Impact fees are most common in Florida, Colorado, the southwest, and the far west. However, communities in Maine, New Hampshire and Vermont use Impact Fees. Municipalities in Massachusetts are not permitted to charge impact fees for development, except in very limited cases.

Only 10 states (including Maine) have specific state legislation authorizing the use of impact fees generally. In many other states, local governments have pursued impact fees, either through home rule authority or other mechanisms.

Some communities similar to Portland have well established impact fee systems, including Concord, NH; Manchester, NH; and Burlington, VT. Generally larger cities have not implemented impact fee systems, although Chicago has an impact fee system for parks and open spaces.

In Oakland, California, there is a proposed impact fee system that is a useful example for Portland, in that it is comprehensive in approach and does not tie the fees to specific improvements. Their zone approach is an interesting methodology for a densely-developed city.

<u>What About in Maine?</u>
Maine's legislature authorized the use of impact fees in 1987 as part of an overall update to the state's planning and land use laws. Title 30-A M.R.S. §4354allows cities to pass an ordinance to require collection of impact fees for a variety of uses, including wastewater collection and treatment; solid waste facilities; fire protection; transportation; and parks and open space. While public education is not listed as an explicitly authorized purpose, it has been accepted as another authorized use for impact fees in Maine.

Several communities in Maine have adopted impact fees for a variety of uses. These include:

- York, where they collect impact fees for schools, water, and sewer infrastructure;
- Scarborough, where they collect impact fees for specific transportation improvements and for schools;
- Gorham, where they collect impact fees for water improvements; open space and recreation; and schools; and
- Saco, where they collect impact fees for wastewater improvements.

<u>What Types of Impact Fees are Used?</u>
As mentioned above, impact fees are used for a variety of public infrastructure needs. The most common fees are for:

- Schools
- Wastewater and Stormwater

- Water Supply
- Transportation Infrastructure
- Parks, Recreation and Open Space
- Libraries
- Public Safety

Fees were traditionally charged at a uniform level for each use. More recently there has been some stratification of fees. For example, some communities charge school impact fees for homes with three or more bedrooms only, or charge a lower fee for smaller units. Similarly, some impact fee systems charge less or nothing for developments utilizing existing infrastructure, such as in a traditional town center.

Table 1. Average Fees by Land Use and Facility Type, 2015

Facility Type	Single-Family (Unit)	Multi-Family (Unit)	Retail (1,000 sf)	Office (1,000 sf)	Industrial (1,000 sf)
Roads	$3,256	$2,201	$5,605	$3,403	$2,063
Water	$4,038	$1,387	$647	$606	$627
Wastewater	$3,694	$1,777	$663	$640	$642
Drainage	$1,397	$784	$1,056	$891	$1,097
Parks	$2,812	$2,099	**	**	**
Library	$403	$314	**	**	**
Fire	$472	$347	$388	$339	$211
Police	$365	$283	$403	$259	$171
General Government	$1,689	$1,200	$745	$751	$436
Schools	$4,769	$2,562	**	**	**
Total Non-Utility*	$8,298	$5,484	$6,165	$4,214	$2,751
Total*	$11,868	$6,870	$6,346	$4,536	$3,150

* Average of total fees charged by jurisdictions, not sum of average fees by facility type (non-utility excludes water and wastewater

** rarely charged to nonresidential land uses, with the exception of school fees in California

Source: National Impact Fee Survey 2015, *Clancy Mullen, Duncan Associates, Austin, TX*

<u>What Current City Policies and Ordinances are Similar to Impact Fees?</u>

As part of the City's site plan review process, and as delegated by the state to issue Traffic Movement Permits (TMP) for the Maine Department of Transportation, mitigation is currently negotiated on a case-by-case basis. Applicants submit a transportation study, stormwater analysis, and other documentation outlining their estimates of the impact of the development on City infrastructure. Sometimes these studies suggest mitigation proposals, and sometimes they find that no mitigation is required. City staff and consultants review these studies and offer a response. As part of the process, a mitigation package is approved as part of the site plan approval and TMP process.

Sometimes the mitigation involves a physical improvement, such as a new traffic light. Sometimes they involve an in-kind contribution to a future improvement. These contributions are held in discrete accounts in the City system until sufficient funds have been found to complete these improvements. These contributions have some similarity to impact fees but are not as comprehensive. As a result, the City may have half of the cost of a particular improvement in an account for some time, but does not have the funds needed to complete that improvement.

The current system, particularly for TMP's, is based on a "first past the threshold" trigger. In other words, until an intersection fails, developers are not asked to fund any improvements. Once the intersection fails, the cost of addressing that failure falls to the developer whose project created that last increment of impact. While that can both help and hurt the same development, it creates conflict and is not as fair as an impact fee system that would have been collecting funds from developers all along.

There is a limited form of impact fees in effect in Portland for projects that wish to reduce their parking requirement. This voluntary fee-in-lieu-of parking system in effect on the Peninsula in certain zones. That system, created in 2010, allows developers to pay a fee rather than provide some of their parking on-site. That fee goes into the Sustainable Transportation Fund and is used to fund transportation alternatives, such as transit improvements, bike parking, and sidewalks. While this ordinance has had some successes, it is very limited in scope. Similarly, the inclusionary zoning ordinance is based on a study that connects new housing development and affordable housing needs.

At present City mitigation efforts are limited to transportation, sewer and stormwater, and, very occasionally, school impacts. There is no systematic process for funding mitigation for the other categories listed above. As part of the 58 Fore Street TMP, staff negotiated a pilot impact fee system for transportation improvements. That methodology worked well, though it was isolated in that case to improvements specific to that geographic area.

<u>What is the Process to Create an Impact Fee System?</u>
While it is tempting to simply create an impact fee system and implement it, there are several important steps that must be taken to establish the public policy and legal framework for an effective program.

1. A city should first complete a Comprehensive Plan or comparable document that establishes the planning goal of an impact fee system and, as much as possible, sets city goals for infrastructure baselines. The recently approved Comprehensive Plan does much of this work, as do other studies completed in the past few years, such as the Trust for Public Land parks and open space study.

2. The City needs to determine in what areas impact fees will be pursued. Currently Portland only seeks mitigation for transportation and stormwater impacts in most cases. The more areas in which impact fees will be implemented, the more

upfront work will be needed. The cost to developers will also be higher, but greater public benefit will be provided.

3. Those infrastructure baselines need to be refined and turned into a set of public improvements that will be needed based on expected development. The City's Capital Improvement Plan does a good job at outlining these improvements, but it is fiscally constrained based on the City's existing financial resources and bonding capacity. A more extensive list of needs, with estimated costs attached, will need to be developed. This can be very simple, as in the case of Scarborough where they simply sought to fund a few specific roadway projects, or more complicated. Alternatively, they can be comprehensive and address a number of impacts at once, as Oakland is doing. That would be our current recommendation.

4. An impact fee study needs to be completed to link these costs and project new development. While it is tempting to skip the study phase, this study is especially important given U.S. Supreme Court rulings in *Nolan* and *Dolan* regarding establishing a rational nexus and rough proportionality for impact fee systems.

5. The City needs to approve an impact fee ordinance with a fee schedule, and amend any other ordinances that may need changing to create such a system in accordance with 30-A M.R.S. §4354.

6. Staff needs to be educated on the new system, and educate the development and neighborhood groups on it as well, to ensure that everyone is familiar with the new process.

7. Staff needs to track the various accounts and complete the funded improvements when collections are sufficient.

8. The list of projects and fee structure will need regular revisiting and updating. At a minimum, this should be completed every few years. Ideally this work would be ongoing as part of the CIP process.

<u>What are our Next Steps?</u>
With the approval of the Comprehensive Plan, the policy basis is in place for next steps. The planned rewrite of Chapter 14 into an updated Unified Development Code is compatible with replacing the current process with a more systematic impact fee system.

Our next step is to complete the nexus study that will document the rationale for the amount of the Impact Fees. Staff has completed a Request for Proposals for a consultant to complete that study with the $25,000 appropriated in the FY18 budget for this purpose. Planning has been working with Public Works; Economic Development; Parks, Recreation & Facilities, and other departments to prepare for this work. We hope to have a consultant selected in September and the nexus study completed this calendar year. We will then submit a proposed ordinance for Planning Board and City Council review.

TischlerBise
FISCAL | ECONOMIC | PLANNING

4701 Sangamore Road | Suite S240
Bethesda, MD 20816
301.320.6900 | www.tischlerbise.com

Att. 2

MEMORANDUM

TO: Helen Donaldson, City of Portland, Planning and Urban Development

FROM: Carson Bise, AICP, TischlerBise
Colin McAweeney, TischlerBise

DATE: April 23, 2018

RE: **DRAFT** Demographic Data and Development Projections for Impact Fee Study

---

As part of our Work Scope, TischlerBise has prepared documentation on demographic data and development projections that will be used in the Impact Fee Study for Transportation, Parks and Open Space, and Wastewater. The data estimates and projections are used in the study's calculations and to illustrate the possible future pace of service demands on the City's infrastructure. Furthermore, the memo demonstrates the history of development and base year development levels in Portland. The base year assumptions are used in the impact fee calculations to determine current levels of service.

The factors provide assumptions for the final impact fee model and, once finalized, this memo will become part of the final report and/or model documentation.

This memo includes discussion and findings on:

- Household/ Housing Unit Population
- Current population and housing unit estimates
- Residential projections
- Current employment and nonresidential floor area estimates
- Nonresidential projections
- Current and projected daily vehicle trips
- Current and projected wastewater flows

Note: calculations throughout this technical memo are based on an analysis conducted using Excel software. Results are discussed in the memo using one-and two-digit places (in most cases), which represent rounded figures. However, the analysis itself uses figures carried to their ultimate decimal places; therefore, the sums and products generated in the analysis may not equal the sum or product if the reader replicates the calculation with the factors shown in the report (due to the rounding of figures shown, not in the analysis).

POPULATION AND HOUSING CHARACTERISTICS

Impact fees often use per capita standards and persons per housing unit or persons per household to derive proportionate share fee amounts. Housing types have varying household sizes and, consequently, a varying demand on City infrastructure and services. Thus, it is important to differentiate between housing types and size.

When persons per housing unit (PPHU) is used in the fee calculations, infrastructure standards are derived using year-round population. In contrast, when persons per household (PPHH) is used in the fee calculations, the fee methodology assumes all housing units will be occupied, thus requiring seasonal or peak population to be used when deriving infrastructure standards. From the Maine Office of Tourism, the Greater Portland and Casco Bay region saw 5.4 million visitors in 2016. As a result, it is not just permanent residents occupying housing units in Portland. In response, City infrastructure and operating service levels are sized to accommodate not just permanent residents, but seasonal residents, seasonal workers, and visitors as well. Thus, TischlerBise recommends that fees for residential development in the City of Portland be imposed according to the persons per household (PPHH).

Persons per household (PPHH) will be held constant over the projection period since the study represents a "snapshot approach" of current levels of service and costs. Based on household characteristics, TischlerBise recommends using two housing unit categories for the impact fee study: (1) Single Family and (2) Multifamily. Single family units include single family detached, single family attached, duplexes, and mobile homes. Multifamily units include structures with more than 2 units. Figure 1 shows the US Census, American Community Survey 2016 5-Year Estimates data for the City of Portland. Single family units have a household size of 2.38 persons per unit and multifamily units have a household size of 1.59 persons per unit.

Additionally, single family units have a vacancy rate of 9.8 percent and are 70 percent of the housing stock in Portland. Multifamily units have a vacancy rate of 9.4 percent and are 30 percent of the housing stock in Portland.

Figure 1. Persons per Household

Type of Structure	Persons	House-holds	Persons per Household	Housing Units	Persons per Housing Unit	Housing Mix	Vacancy Rate
Single Family Unit[1]	50,010	21,052	**2.38**	23,338	2.14	69.8%	9.8%
Multifamily Unit[2]	14,542	9,149	**1.59**	10,098	1.44	30.2%	9.4%
Total	64,552	30,201	**2.14**	33,436	1.93		9.7%

Source: TischlerBise analysis; U.S. Census Bureau, 2012-2016 American Community Survey, 5-Year Estimates
[1] Includes detached, attached, duplexes, and mobile home units.
[2] Includes structures with more than 2 units.

BASE YEAR POPULATION AND HOUSING UNITS

Permanent Residents

Along with the population estimate for residents in single family and multifamily units, the American Community Survey provides population estimates for those residing in Group Quarters (i.e. student housing and military residents). Found in Figure 2, the household population and group quarters are considered the City's permanent population and in 2016 it is estimated that the permanent population was 66,627.

Figure 2. Permanent Population, 2016

Type of Structure	Persons	%
Single Family Unit	50,010	75.1%
Multifamily Unit	14,542	21.8%
Group Quarters	2,075	3.1%
Total	**66,627**	**100.0%**

Source: U.S. Census Bureau, 2012-2016 American Community Survey, 5-Year Estimates

Furthermore, in the recently published *Portland's Plan 2030* several population growth scenarios are played out. The comprehensive plan indicates that a medium-level growth scenario would result in a 2030 population of 71,374. As a result, for the impact fee study, by 2030 the City of Portland is forecasted to have a permanent population of 71,374. To estimate the City's population in the interim years a straight-line approach is used. Figure 3 illustrates the growth in permanent population. In the base year, 2018, there is estimated to be 67,305 permanent residents in Portland.

Figure 3. Base Year Permanent Population

				5-Year Increments				
	2016	2017	Base Year 2018	2019	2020	2025	2030	Total Increase
Permanent Population	66,627	66,966	67,305	67,644	67,983	69,679	71,374	**4,747**
Percent Increase		0.5%	0.5%	0.5%	0.5%	0.5%	0.5%	**7.1%**

Source: U.S. Census Bureau, 2012-2016 American Community Survey, 5-Year Estimates; City of Portland Planning Department; TischlerBise analysis

Seasonal Residents & Visitors

As mentioned, the impact fee study will be using a peak population of Portland because of the large tourism industry. It is assumed that City infrastructure and services are sized to serve a peak population not just the permanent population. In this case, two additional populations need to be calculated: seasonal and visitor. The seasonal population includes residents who have second homes in Portland and the seasonal labor influx during peak tourism months. The visitor population includes overnight and day visitors.

To calculate the seasonal population, the study assumes full occupancy of the housing units in the city. From the US Census data, in 2016, there were 2,286 vacant single family homes and 949 vacant multifamily homes. The seasonal population is calculated by multiplying the units by the corresponding the persons per household factor (PPHH). In 2016, there was a seasonal population of 6,950.

Figure 4. Seasonal Population, 2016

Type of Structure	Vacant Units	Persons per Household	Seasonal Population
Single Family Unit[1]	2,286	2.38	**5,441**
Multifamily Unit[2]	949	1.59	**1,509**
Total	3,235	2.15	**6,950**

Source: TischlerBise analysis; U.S. Census Bureau, 2012-2016 American Community Survey, 5-Year Estimates
[1] Includes detached, attached, duplexes, and mobile home units.
[2] Includes structures with more than 2 units.

The visitor population for Portland is found by first analyzing the state and regional totals. In 2016, there were 41.2 million visitors to Maine. The majority of the visitors came in the summer, resulting in the average daily number of visitors in the summer being 185 percent of the annual average.

Figure 5. State of Maine Visitor Totals, 2016

Season	Total Visitors	Average Daily Visitors	Percent of Annual Ave.
Winter	5,615,670	46,156	41%
Summer	25,328,066	208,176	**185%**
Fall	10,230,660	84,088	75%
Total	41,174,396	112,807	100%

Source: Maine Office of Tourism, *2016 Calendar Year Annual Report*

According to the Maine Office of Tourism (MOT), there were 5,360,000 visitors (overnight and day visitors) to the Greater Portland and Casco Bay Region in 2016. Results of the MOT's visitor survey indicate that the Portland's Waterfront was the top attraction for 33 percent of overnight visitors and for 30 percent of day visitors. The study will use a conservative method and use these percentages to allocate the regional visitor total to the City of Portland.

In Figure 6, the City of Portland's daily peak visitor population is calculated. The estimated total of overnight visitors to Portland is 745,800. The estimated total of day visitors to Portland is 930,000. As a result, the total annual visitors to the City of Portland is 1,675,800, or an average of 4,591 per day. Found above, during the summer statewide, the visitor population spike to 185 percent of the annual average. This is applied to the City's average to calculate the daily peak season visitor total. As a result, in 2016, it is estimated that the City of Portland's daily peak season visitor population was 8,473.

Figure 6. City of Portland Peak Season Visitor Population, 2016

Overnight Visitors to Region	2,260,000
City's Proportion of Region	33%
Overnight Visitors to Portland	**745,800**
Day Visitors to Region	3,100,000
City's Proportion of Region	30%
Day Visitors to Portland	**930,000**
Total Annual Visitors to Portland	**1,675,800**
Average Daily Visitors	4,591
Peak Season Multipler	185%
Daily Peak Season Visitor Total	**8,473**

Source: Maine Office of Tourism, 2016; TischlerBise Analysis

The study assumes that the visitor population will have a positive relationship and follow the permanent population's growth. From 2016 to 2018 there is a 1.02 percent increase in permanent population in Portland, this is applied to the visitor population to calculate the base year total. It is assumed that during the peak seasonal period the City's seasonal population (seasonal residents and workers) occupies the vacant housing units. As a result, the seasonal population is calculated based on housing growth, described in the next section of the report. In 2018, it is estimated that the peak population for the City of Portland is 83,250.

Figure 7. Base Year Peak Population

	2016	2017	Base Year 2018
Peak Population			
Permanent	66,627	66,966	**67,305**
Seasonal	6,950	7,168	**7,386**
Visitor	8,473	8,516	**8,559**
Total	82,049	82,650	**83,250**

Source: TischleBise analysis

Base Year Housing Stock

To understand the housing growth in the City of Portland, the building permit data from the last five years is collected, Figure 8. Over the past 5 years there has been an increase of 1,435 housing units in Portland and, on average, there has been 33 single family and 254 multifamily housing units constructed annually. It is assumed this trend will continue and the averages are used to project housing development in the City of Portland.

Figure 8. Permitted Housing Units

	2013	2014	2015	2016	2017	Total	Average
Single Family	26	53	23	38	26	166	**33**
Multifamily	168	97	187	611	206	1,269	**254**
Total	194	150	210	649	232	1,435	**287**

Source: City of Portland Planning Department

By examining parcel data provided by the City with a GIS (Geographic Information System) software, the base year housing stock is estimated in Figure 9. In total, 56 percent of the housing in the City of Portland is single family and 44 percent multifamily. Consistent with the City's Land Use Code, single family units include single family detached, single family attached, duplexes, and mobile homes. Multifamily units include structures with 3 or more units.

Figure 9. Base Year Housing Stock (Housing Units)

Housing Type	Base Year 2018	%
Single Family	21,047	56%
Multifamily	16,575	44%
Total	**37,622**	**100%**

Source: City of Portland GIS Data

POPULATION AND HOUSING UNIT PROJECTIONS

Illustrated in Figure 10, by using the projections from *Portland's Plan 2030* for permanent population, a growth of 3,391 residents is projected by 2028. The seasonal population is assumed to grow with housing development. The vacancy rates found in Figure 1 are assumed to hold through the projection period and the seasonal population is found by combining the estimated vacant units with the corresponding PPHH factor. Lastly, to project the daily peak visitor population growth, the annual percent increase in permanent population is applied. Overall, there is a peak population increase of 4,279. Of the total population in 2028, 81 percent is permanent, 9 percent is seasonal, and 10 percent is visitor population.

To project the housing unit growth in Portland, the five-year annual average of building permits is used (see Figure 8). Over the ten-year projection period, the housing stock in the city is estimated to increase by 2,870 units (88 percent multifamily units).

Figure 10. City of Portland Annual Residential Development Projections

	Base Year 2018	2019	2020	2021	2022	2023	2024	2025	2026	2027	2028	2029	2030	Total Increase
Peak Population														
Permanent	67,305	67,644	67,983	68,322	68,661	69,001	69,340	69,679	70,018	70,357	70,696	71,035	71,374	**3,391**
Seasonal	7,386	7,432	7,478	7,523	7,569	7,615	7,660	7,706	7,752	7,797	7,843	7,889	7,934	**457**
Visitor	8,559	8,602	8,645	8,688	8,731	8,775	8,818	8,861	8,904	8,947	8,990	9,033	9,076	**431**
Total	83,250	83,678	84,106	84,534	84,962	85,390	85,818	86,246	86,673	87,101	87,529	87,957	88,385	**4,279**
Housing Unit														
Single Family	21,047	21,080	21,113	21,147	21,180	21,213	21,246	21,279	21,313	21,346	21,379	21,412	21,445	**332**
Multifamily	16,575	16,829	17,083	17,336	17,590	17,844	18,098	18,352	18,605	18,859	19,113	19,367	19,621	**2,538**
Total	37,622	37,909	38,196	38,483	38,770	39,057	39,344	39,631	39,918	40,205	40,492	40,779	41,066	**2,870**

Source: Portland's Plan 2030; TischlerBise analysis

CURRENT EMPLOYMENT AND NONRESIDENTIAL FLOOR AREA

The impact fee study will include nonresidential development as well. According to the U.S. Census Bureau's web application, OnTheMap, there were 65,203 jobs in Portland in 2015. The education, health care, and social assistance services accounted for the largest percentage of the total (26.2 percent).

Figure 11. Employment by Industry Sector, 2015

Industry Sector	Employment	%
Agriculture, forestry, fishing and hunting, and mining	18	0.0%
Utilities	395	0.6%
Construction	2,015	3.1%
Manufacturing	2,714	4.2%
Wholesale trade	2478	3.8%
Retail trade	5,302	8.1%
Transportation and warehousing, and utilities	2,065	3.2%
Information	1,529	2.3%
Finance and insurance, and real estate and rental and leasing	8,114	12.4%
Professional, scientific, mgmt. , admin., and waste mgmt. services	11,893	18.2%
Educational services, and health care and social assistance	17,057	26.2%
Arts, entertainment, recreation, accommodation, and food services	7,354	11.3%
Other services, except public administration	2,475	3.8%
Public administration	1,794	2.8%
Total	**65,203**	**100.0%**

Source: U.S. Census Bureau, OnTheMap 2015

The fourteen industry sectors in Figure 11 have been compiled into four industries: Retail, Office, Industrial, and Institutional. The City of Portland's employment is pretty well dispersed between the industries, with Institutional and Office accounting for the highest percentages, Figure 12.

Figure 12. Employment by Industry, 2015

Industry	Jobs	%
Retail	12,656	19%
Office	24,011	37%
Industrial	9,685	15%
Institutional	18,851	29%
Total	**65,203**	**100%**

Source: U.S. Census Bureau, OnTheMap 2015

Since the breakdown is for 2015, a projection is necessary to estimate the job totals for the base year. To estimate the current employment in the City of Portland, employment projections from Portland Area Comprehensive Transportation System (PACTS) are used. Based on employment projections at the Traffic Analysis Zone (TAZ) level, PACTS forecast an employment increase of 27.5 percent from 2014 to 2040. The annual percent increase of the PACTS projection is used to calculate the employment growth in Figure 13. The breakdown by industry in Figure 12 is then applied to total increase to calculate the growth in each industry. In the base year, it is estimated that there are 67,270 jobs in Portland.

Figure 13. Base Year Employment

	2015	2016	2017	Base Year 2018
Employment				
Retail	12,656	12,790	12,923	13,057
Office	24,011	24,265	24,518	24,772
Industrial	9,685	9,787	9,890	9,992
Institution	18,851	19,050	19,249	19,449
Total	**65,203**	**65,892**	**66,581**	**67,270**

Source: Portland Area Comprehensive Transportation System (PACTS); TischlerBise analysis

Base year nonresidential floor area for the Retail, Office, Industrial, and Institutional industry sectors are calculated with GIS parcel data provided by City staff. In Figure 14, there is a total of 35.3 million square feet of nonresidential floor area in Portland with all sectors accounting for at least 20 percent. Additionally, the figure lists the City's land use categories used to determine the floor area of each industry.

Figure 14. Base Year Nonresidential Floor Area

Industry	Nonresidential Sq. Ft.	%	Land Use Categories
Retail	9,816,540	28%	Multiuse Commercial, Retail & Personal Services
Office	9,317,766	26%	Office & Business Services, Communications, Commercial Condos
Industrial	7,224,665	20%	Manufacturing & Constr., Multiuse Ind., Transport., Warehouse, Wholesale
Institutional	8,909,498	25%	Charitable, Government, Scientific Inst., Religious, Other Exempt by Law
Total	**35,268,468**	**100%**	

Source: City of Portland GIS data

Furthermore, an analysis of inflow/outflow of employment is available through OnTheMap. Shown in Figure 15, 72.5 percent of the jobs in the City of Portland are filled by those living outside of the city.

Figure 15. Inflow/Outflow of Employment

	Jobs (2015)	%
Residents Working in Portland	17,958	27.5%
Non-Residents Working in Portland	47,245	72.5%
Total Employment in Portland	**65,203**	**100.0%**

Soure: U.S. Census Bureau, OnTheMap, 2015

NONRESIDENTIAL FLOOR AREA AND EMPLOYMENT PROJECTIONS

To project nonresidential floor area, square feet per employee factors from the Institute for Transportation Engineer's Trip Generation (2017) are used. To estimate the factor for Retail the Shopping Center factor is used, for Office the General Office factor is used, for Industrial the Manufacturing factor is used, and for Institutional the Hospital factor is used (Figure 16).

Figure 16. Institute of Transportation Engineers Nonresidential Land Use Factors

ITE Code	Land Use	Demand Unit	Wkdy Trip Ends Per Dmd Unit	Wkdy Trip Ends Per Employee	Emp Per Dmd Unit	Sq Ft Per Emp
110	Light Industrial	1,000 Sq Ft	4.96	3.05	1.63	615
130	Industrial Park	1,000 Sq Ft	3.37	2.91	1.16	864
140	Manufacturing	1,000 Sq Ft	3.93	2.47	1.59	628
150	Warehousing	1,000 Sq Ft	1.74	5.05	0.34	2,902
254	Assisted Living	bed	2.60	4.24	0.61	na
320	Motel	room	3.35	25.17	0.13	na
520	Elementary School	1,000 Sq Ft	19.52	21.00	0.93	1,076
530	High School	1,000 Sq Ft	14.07	22.25	0.63	1,581
540	Community College	student	1.15	14.61	0.08	na
550	University/College	student	1.56	8.89	0.18	na
565	Day Care	student	4.09	21.38	0.19	na
610	Hospital	1,000 Sq Ft	10.72	3.79	2.83	354
620	Nursing Home	1,000 Sq Ft	6.64	2.91	2.28	438
710	General Office (avg size)	1,000 Sq Ft	9.74	3.28	2.97	337
760	Research & Dev Center	1,000 Sq Ft	11.26	3.29	3.42	292
770	Business Park	1,000 Sq Ft	12.44	4.04	3.08	325
820	Shopping Center (avg size)	1,000 Sq Ft	37.75	16.11	2.34	427

Source: Trip Generation, Institute of Transportation Engineers, 10th Edition (2017)

Found in Figure 17, job growth over the next ten years is projected to follow the PACTS' annual percentage increase forecast. In total, 6,890 new jobs are projected. Each industry sector is projected to have an increase over 1,000 jobs with Office topping the four with an increase of 2,537 jobs. To project floor area, the square foot per job factors are applied to the corresponding job totals. Over the next ten years, it is projected that there will be a growth of 2.8 million nonresidential square feet in the City of Portland. The Office and Institutional industries are projected to have the largest increases in floor area, both over 700,000 square feet.

Figure 17. Employment and Nonresidential Floor Area Projections

Industry	Base Year 2018	2019	2020	2021	2022	2023	2024	2025	2026	2027	2028	Total Increase
Employment												
Retail	13,057	13,191	13,325	13,458	13,592	13,726	13,860	13,993	14,127	14,261	14,395	**1,337**
Office	24,772	25,026	25,280	25,533	25,787	26,041	26,295	26,548	26,802	27,056	27,309	**2,537**
Industrial	9,992	10,094	10,197	10,299	10,401	10,504	10,606	10,708	10,811	10,913	11,015	**1,023**
Institution	19,449	19,648	19,847	20,046	20,245	20,445	20,644	20,843	21,042	21,241	21,441	**1,992**
Total	67,270	67,959	68,648	69,337	70,026	70,715	71,404	72,093	72,782	73,471	74,160	**6,890**
Nonresidential Floor Area (1,000 sq. ft.)												
Retail	5,572	5,629	5,686	5,743	5,801	5,858	5,915	5,972	6,029	6,086	6,143	**571**
Office	8,342	8,428	8,513	8,599	8,684	8,769	8,855	8,940	9,026	9,111	9,197	**854**
Industrial	6,280	6,344	6,409	6,473	6,537	6,602	6,666	6,730	6,795	6,859	6,923	**643**
Institution	6,876	6,946	7,017	7,087	7,158	7,228	7,299	7,369	7,439	7,510	7,580	**704**
Total	27,070	27,348	27,625	27,902	28,179	28,457	28,734	29,011	29,288	29,566	29,843	**2,773**

Source: Portland Area Comprehensive Transportation System (PACTS); City of Portland; TischlerBise analysis

VEHICLE TRIP GENERATION

Residential Trips

A customize trip rate is calculated for the single family and multifamily units in the City of Portland. In Figure 18, the most recent data from the American Community Survey is inputted into equations provided by the Institute of Transportation Engineers (ITE) to calculate the trip ends per housing unit factor. A single family unit is estimated to take 7.6 trip ends on an average weekday and a multifamily unit is estimated to take 3.6 trip ends on an average weekday.

Figure 18. Customized Residential Trip End Rates

		Households (2)			Vehicles per
	Vehicles Available (1)	Single Family	Multifamily Units	Total HHs	Household by Tenure
Owner-occupied	23,000	12,312	680	12,992	1.77
Renter-occupied	17,976	8,740	8,469	17,209	1.04
TOTAL	**40,976**	**21,052**	**9,149**	**30,201**	**1.36**
Housing Units (6) =>		23,338	10,098	33,436	
Persons per Housing Unit =>		2.14	1.44	1.93	

	Persons (3)	Trip Ends (4)	Vehicles by Type of Housing	Trip Ends (5)	Average Trip Ends	**Trip Ends per Housing Unit**
Single Family	50,010	154,055	30,926	202,330	178,192	**7.60**
Multifamily	14,542	33,220	10,050	39,892	36,556	**3.60**
TOTAL	**64,552**	**187,275**	**40,976**	**242,222**	**214,748**	**6.40**

(1) Vehicles available by tenure from Table B25046, 2012-2016 American Community Survey 5-Year Estimates.
(2) Households by tenure and units in structure from Table B25032, American Community Survey, 2012-2016.
(3) Persons by units in structure from Table B25033, American Community Survey, 2012-2016.
(4) Vehicle trips ends based on persons using formulas from Trip Generation (ITE 2017). For single family housing (ITE 210), the fitted curve equation is EXP(0.89*LN(persons)+1.72). To approximate the average population of the ITE studies, persons were divided by 286 and the equation result multiplied by 286. For multifamily housing (ITE 221), the fitted curve equation is (2.29*persons)-81.02.
(5) Vehicle trip ends based on vehicles available using formulas from Trip Generation (ITE 2017). For single family housing (ITE 210), the fitted curve equation is EXP(0.99*LN(vehicles)+1.93). To approximate the average number of vehicles in the ITE studies, vehicles available were divided by 485 and the equation result multiplied by 485. For multifamily housing (ITE 220), the fitted curve equation is (3.94*vehicles)+293.58 (ITE 2012).
(6) Housing units from Table B25024, American Community Survey, 2012-2016.

Residential Vehicle Trips Adjustment Factors

A vehicle trip end is the out-bound or in-bound leg of a vehicle trip. As a result, a standard 50 percent adjustment to applied to trip ends to calculate a vehicle trip. However, other adjustments are necessary as well.

Figure 19 calculates the adjustment for Portland residents that commute outside of the city to work. According to the National Household Travel Survey (2009), home-based work trips are typically 31 percent of "production" trips, out-bound trips (which are 50 percent of all trip ends). Also, utilizing the most recent

data from the Census Bureau's web application "OnTheMap", 49 percent of the City of Portland's workers travel outside the City for work. In combination, these factors account for 8 percent of additional production trips (0.31 x 0.50 x 0.49 = 0.08). The total adjustment factor for residential housing units includes attraction trips (50 percent of trip ends) plus the journey-to-work commuting adjustment (8 percent of production trips) for a total of 58 percent.

Figure 19. Trip Adjustment Factor for Commuters out of the City

Employed Portland Residents (2015)	35,405
Portland Residents Working in the City (2015)	17,958
Portland Residents Commuting Outside of the City for Work	17,447
Percent Commuting out of the City	**49%**
Additional Production Trips	**8%**
Residential Trip Adjustment Factor	**58%**

Source: U.S. Census, OnTheMap Application, 2015

Additionally, Portland has viable alternatives to a vehicle for commuting, so a factor needs to be included for residents that choose not to drive to work. According to Fort Hill Infrastructure's *City of Portland Parking Study for Downtown, The Old Port, and The Eastern Waterfront*, 16.9 percent of commuters throughout the city chose either to use transit, bicycle, or walk to work (Figure 20). The study found an even higher percentage of alternative commuting within the downtown. When calculating vehicle trips, the factor of 16.9 percent is applied to the trip end factors for housing units.

Figure 20. Alternative Mode of Commuting

	Transit	Bicycling	Walking	Total
Alternative Commuting	3.1%	1.6%	12.2%	16.9%

Source: *City of Portland Parking Study*, Fort Hill Infrastructure, 2017

Nonresidential Trips

Vehicle trip generation for nonresidential land uses are calculated by using ITE's average daily trip end rates and adjustment factors found in their recently published 10th edition of *Trip Generation*. To estimate the trip generation in Portland, the weekday trip end per 1,000 square feet factors highlighted in Figure 21 are used. To estimate the trip generation for Retail the Shopping Center factor is used, for Office the General Office factor is used, for Industrial the Manufacturing factor is used, and for Institutional the Hospital factor is used.

Figure 21. Institute of Transportation Engineers Nonresidential Land Use Factors

ITE Code	Land Use	Demand Unit	Wkdy Trip Ends Per Dmd Unit	Wkdy Trip Ends Per Employee	Emp Per Dmd Unit	Sq Ft Per Emp
110	Light Industrial	1,000 Sq Ft	4.96	3.05	1.63	615
130	Industrial Park	1,000 Sq Ft	3.37	2.91	1.16	864
140	Manufacturing	1,000 Sq Ft	3.93	2.47	1.59	628
150	Warehousing	1,000 Sq Ft	1.74	5.05	0.34	2,902
254	Assisted Living	bed	2.60	4.24	0.61	na
320	Motel	room	3.35	25.17	0.13	na
520	Elementary School	1,000 Sq Ft	19.52	21.00	0.93	1,076
530	High School	1,000 Sq Ft	14.07	22.25	0.63	1,581
540	Community College	student	1.15	14.61	0.08	na
550	University/College	student	1.56	8.89	0.18	na
565	Day Care	student	4.09	21.38	0.19	na
610	Hospital	1,000 Sq Ft	10.72	3.79	2.83	354
620	Nursing Home	1,000 Sq Ft	6.64	2.91	2.28	438
710	General Office (avg size)	1,000 Sq Ft	9.74	3.28	2.97	337
760	Research & Dev Center	1,000 Sq Ft	11.26	3.29	3.42	292
770	Business Park	1,000 Sq Ft	12.44	4.04	3.08	325
820	Shopping Center (avg size)	1,000 Sq Ft	37.75	16.11	2.34	427

Source: Trip Generation, Institute of Transportation Engineers, 10th Edition (2017)

To calculate vehicle trips, the standard 50 percent adjustment is applied to Office, Industrial, and Institutional. A lower vehicle trip adjustment factor is used for Retail because this type of development attracts vehicles as they pass-by on arterial and collector roads. For example, when someone stops at a convenience store on their way home from work, the convenience store is not their primary destination. In Figure 22, the Institute for Transportation Engineers' land use code, daily vehicle trip ends, trip adjustment factor, and alternative commuting factor is listed for each land use.

Figure 22. Daily Vehicle Trip Factors

Land Use	ITE Codes	Vehicle Trip Ends	Adjustment Factor	Alternative Commuting
Residential (per housing unit)				
Single Family	210	7.60	58%	16.9%
Multifamily	220	3.60	58%	16.9%
Nonresidential (per 1,000 square feet)				
Retail	820	37.75	38%	-
Office	710	9.74	50%	-
Industrial	140	3.93	50%	-
Institutional	610	10.72	50%	-

Source: Trip Generation, Institute of Transportation Engineers, 10th Edition (2017); City of Portland Parking Study, Fort Hill Infrastructure

VEHICLE TRIP PROJECTION

The base year vehicle trip totals and vehicle trip projections are calculated by combining the vehicle trip end factors, the trip adjustment factor, and the residential and nonresidential assumptions for housing stock and floor area. Found in Figure 23, in the base year, residential land uses generate 105,856 vehicle trips (38 percent) and nonresidential land uses generate 169,755 vehicle trips (62 percent) in the City of Portland. Through 2028, there will be an increase of 23,007 daily vehicle trips in Portland with Retail, Multifamily, and Office development being the three largest contributors to the increase.

Figure 23. Total Daily Vehicle Trip Projections

	Base Year 2018	2019	2020	2021	2022	2023	2024	2025	2026	2027	2028	Total Increase
Residential Trips												
Single Family	77,096	77,218	77,339	77,461	77,583	77,704	77,826	77,947	78,069	78,191	78,312	**1,216**
Multifamily	28,760	29,200	29,640	30,081	30,521	30,962	31,402	31,842	32,283	32,723	33,164	**4,404**
Subtotal	105,856	106,418	106,980	107,542	108,104	108,666	109,228	109,790	110,352	110,914	111,476	**5,620**
Nonresidential Trips												
Retail	79,934	80,752	81,571	82,390	83,209	84,027	84,846	85,665	86,483	87,302	88,121	**8,187**
Office	40,626	41,043	41,459	41,875	42,291	42,707	43,123	43,539	43,955	44,371	44,788	**4,161**
Industrial	12,340	12,467	12,593	12,719	12,846	12,972	13,099	13,225	13,351	13,478	13,604	**1,264**
Institutional	36,855	37,233	37,610	37,988	38,365	38,743	39,120	39,498	39,875	40,252	40,630	**3,775**
Subtotal	169,755	171,494	173,233	174,971	176,710	178,449	180,188	181,926	183,665	185,404	187,142	**17,387**
Grand Total Trips	275,611	277,912	280,213	282,513	284,814	287,115	289,415	291,716	294,017	296,318	298,618	**23,007**

Source: Trip Generation, Institute of Transportation Engineers, 10th Edition (2017); TischlerBise analysis

BASE YEAR WASTEWATER USAGE

Water and sewer account data has been provided by the Portland Water District and the City's Public Works Department. With the database, residential, commercial, industrial, and institutional wastewater usage is calculated. Additionally, with account data, the wastewater usage of an Equivalent Residential Unit (ERU) is calculated as well. The ERU is the estimate of the daily average wastewater usage from a household with a water meter that is 5/8 inches. In the impact fee calculate, a capacity ratio factor is applied when calculating the wastewater usage and resulting impact fee for developments with larger meters.

Base Year Estimates

Shown in Figure 24, on average there is a total of 5.7 million gallons per day of wastewater flowing through the City's sewer system from these four development types. The majority of the wastewater flows from residential development, but commercial development creates a significant demand as well.

Figure 24. City of Portland Daily Wastewater Usage, 2018

Development Type	Base Year (gals/day)	%
Residential	2,933,364	52%
Commercial	1,998,656	35%
Industrial	542,244	10%
Institutional	187,205	3%
Total	**5,661,470**	**100%**

Source: City of Portland Public Works Department

Equivalent Residential Unit

The wastewater component of the impact fee study will use the wastewater flow calculated for residential units that have a water meter of 5/8 inches to represent the Equivalent Residential Unit (ERU). To calculate the ERU, the wastewater account database is filtered by active residential accounts that use the City's sewer system. Additionally, the database is further limited by only year-round accounts. These accounts are occupied households that reside in Portland permanently. Year-round accounts are approximated by accounts that have activity every month. Illustrated in Figure 25, there is an average of 61 hundred cubic feet (HCF) of wastewater per year from a year-round active residential account flowing into the City's sewer system. That equates to an average of 126 gallons per day, rounded.

Figure 25. Equivalent Residential Unit

Meter Size (inches)	Total Water (HCF)	Active Accounts	Annual Average per Account (HCF)	Annual Average (gallons)	Daily Average (gallons)
5/8	866,230	14,134	61	45,846	**126**

Source: City of Portland Public Works Department; TischlerBise analysis
Note: Provided data measured wastewater totals in hundred cubic feet (HCF), equal to 748.05 gallons

WASTEWATER PROJECTIONS

To project wastewater flows, is it assumed that the average consumptions will stay consistent. As a result, the wastewater from residential accounts will increase at the same rate as the projected housing units and wastewater from nonresidential accounts will increase at the same rate as the projected floor area for the respective industry. Over the next ten years, a total increase of 500,000 gallons per day is projected. Residential and Commercial land uses accounting for the majority of the increase.

Figure 26. Wastewater Projections, Million Gallons Per Day (MGD)

Development Type	Base Year 2018	2019	2020	2021	2022	2023	2024	2025	2026	2027	2028	Total Increase
Residential	2.93	2.96	2.98	3.00	3.02	3.05	3.07	3.09	3.11	3.13	3.16	**0.22**
Commercial	2.00	2.02	2.04	2.06	2.08	2.10	2.12	2.14	2.16	2.18	2.20	**0.20**
Industrial	0.54	0.55	0.55	0.56	0.56	0.57	0.58	0.58	0.59	0.59	0.60	**0.06**
Institutional	0.19	0.19	0.19	0.19	0.19	0.20	0.20	0.20	0.20	0.20	0.21	**0.02**
Total	5.66	5.71	5.76	5.81	5.86	5.91	5.96	6.01	6.06	6.11	6.16	**0.50**

Source: City of Portland Public Works Department; TischlerBise analysis